# TM 11-5995-208-24&P

## ORGANIZATIONAL, DIRECT SUPPORT AND GENERAL SUPPORT MAINTENANCE MANUAL FOR

## CABLE ASSEMBLY, SPECIAL PURPOSE CX-11230/G (5995-00-133-9126)

## AND CABLE ASSEMBLY, ADAPTER CX-10734/G (5995-00-133-9125)

## INCLUDING REPAIR PARTS AND SPECIAL TOOLS LIST

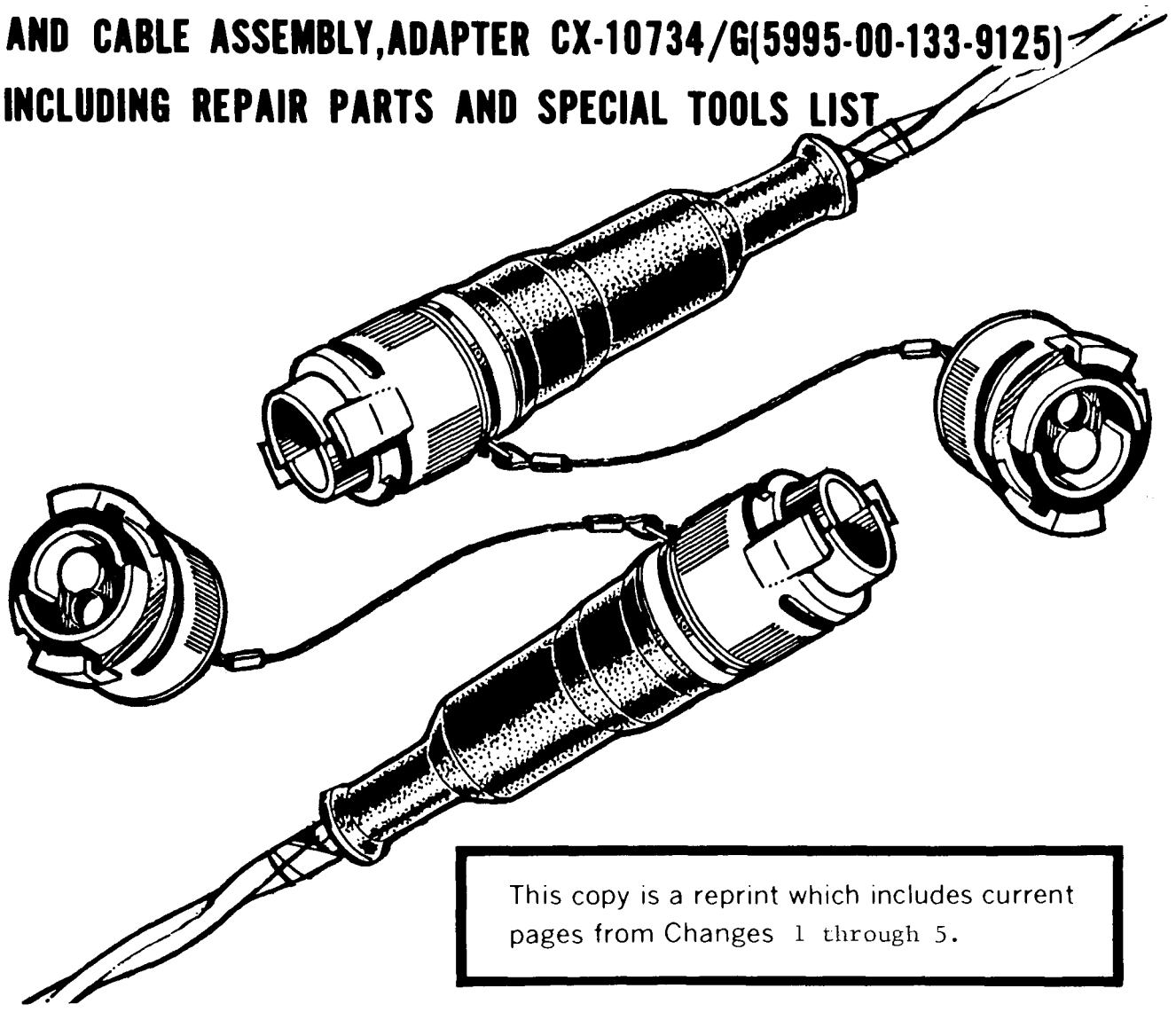

This copy is a reprint which includes current pages from Changes 1 through 5.


HEADQUARTERS, DEPARTMENT OF THE ARMY

WASHINGTON, D. C.

SEPTEMBER 1978

# W A R N I N G

**WHEN YOU ARE TROUBLESHOOTING, DO NOT OPEN ANY CABLE CONNECTION.**

**0PENING A CONNECTION CAN EXPOSE YOU TO A FATAL SHOCK BY HIGH VOLTAGE.**

**BUT,**

**IF YOU FIND IT IS NECESSARY TO REMOVE OR REPLACE A COMPONENT OR A CABLE SECTION IN THE SYSTEM,**

**USE YOUR ORDER WIRE HOOKUP**

**AND CALL THE MUX EQUIPMENT OPERATORS AND TELL THEM TO REMOVE THE POWER FROM THE CABLE HOOKUP.**

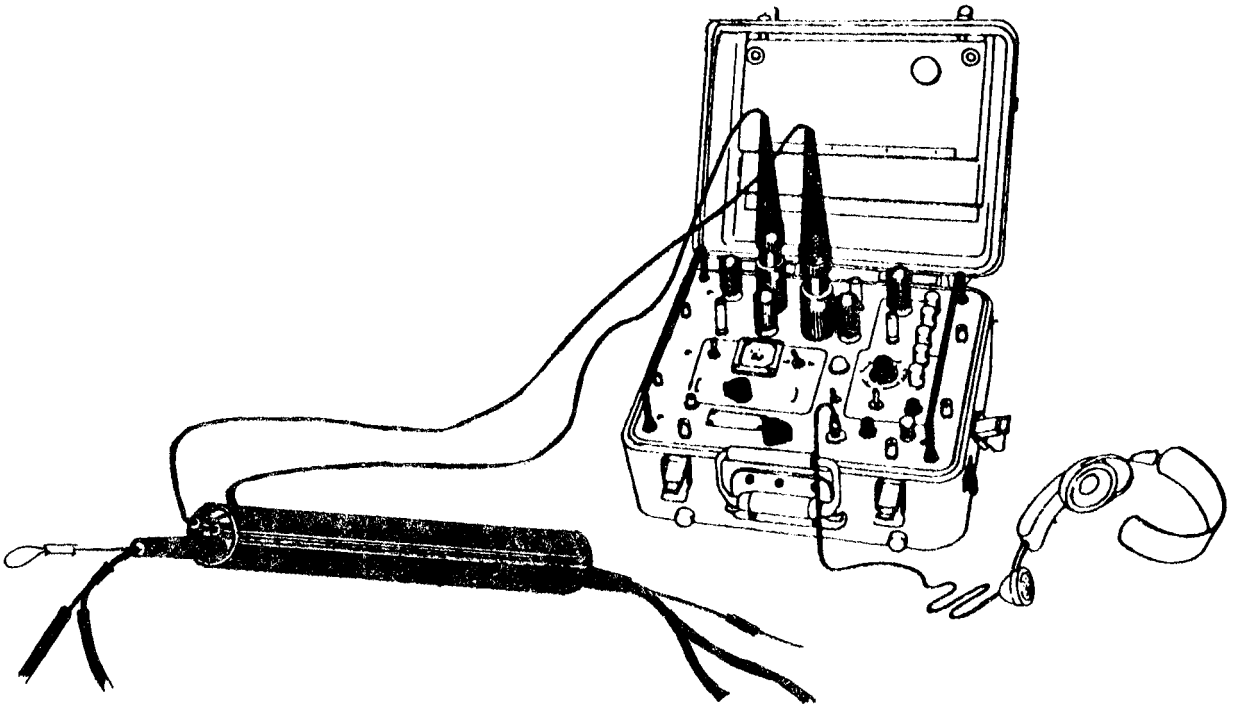

CHANGE

No. 5

HEADQUARTERS
DEPARTMENT OF THE ARMY
Washington, DC, 9 July 1984

# ORGANIZATIONAL, DIRECT SUPPORT AND GENERAL SUPPORT MAINTENANCE MANUAL FOR CABLE ASSEMBLY, SPECIAL PURPOSE, CX-11230/G (NSN 5995-00-133-9126) AND CABLE ASSEMBLY, ADAPTER CX-10734/G (NSN 5995-00-133-9125) INCLUDING REPAIR PARTS AND SPECIAL TOOLS LIST

Change 5 is current as of

TM 11-5995-208-24&P, 26 September 1978, is changed as follows:

1. New or changed material is indicated by a vertical bar in the margin of the page.

2. Remove and insert pages as indicated below.

| *Remove pages* | *Insert pages* |
|---|---|
| iiiand iv | iii and iv |
| 2-3 and 2-4 | 2-3 and 2-4 |
| 2-7 and 2-8 | 2-7 through 2-8.1/(2-8.2 blank) |
| 3-l through 3-4 | 3-l through 3-4 |
| 3-33 and 3-34 | 3-33 and 3-34 |
| 3-39 and 3-40 | 3-39 and 3-40 |
| A-l and A-2 | A-l and A-2 |

*3.* File this change sheet in front of the publication.

By Order of the Secretary of the Army:

JOHN A. WICKHAM JR.
*General, United States Army*
*Chief of Staff*

Official:

ROBERT M. JOYCE
*Major General, United States Army*
*The Adjutant General*

Distribution:

To be distributed in accordance with DA Form 15-51 B requirements for CX-11230/G.

CHANGE)

No. 4 )

HEADQUARTERS
DEPARTMENT OF THE ARMY
Washington, DC, 11 August 1981

**ORGANIZATIONAL, DIRECT SUPPORT, AND GENERAL SUPPORT MAINTENANCE MANUAL FOR CABLE ASSEMBLY, SPECIAL PURPOSE, CX-11230/G (NSN 5995-00-133-9126) AND CABLE ASSEMBLY, ADAPTER CX-10734/G (NSN 5995-00-133-9125) INCLUDING REPAIR PARTS AND SPECIAL TOOLS LIST**

Change 4 is current as of 31 August 1981

TM 11-5995-208-24&P, 26 September 1978, is changed as follows:

1. New or changed material is indicated by a vertical bar in the margin of the page.

2. Remove old pages and insert new pages as indicated below:

| Remove | Insert |
|---|---|
| None | A and B |
| 1-1 and 1-2 | 1-1 and 1-2 |
| 2-3 through 2-10 | 2-3 through 2-10 |
| 3-1 and 3-2 | 3-1 and 3-2 |
| 3-27 and 3-28 | 3-27 and 3-28.1/(3-28.2 Blank) |
| 3-31 through 3-34 | 3-31 through 3-34 |
| D-1 and D-2 | D-1 and D-2 |

4. File this change sheet in front of the publication for references purposes.

By Order of the Secretary of the Army:

EDWARD C. MEYER
General, United States Army
Chief of Staff

Official:

ROBERT M. JOYCE
Brigadier General, United States Army
The Adjutant General

DISTRIBUTION:
To be distributed in accordance with Special List.

## WARNING

Do not lay, place, or throw field wire on or near power lines or transformers. Dangerous high voltages exist at these structures and severe shock or DEATH may result from contact between field wire and power lines. Follow the five emergency steps for electric shock. Be careful when using the CX-11230/G during storms. Lightning may pose a shock hazard.

## WARNING

Keep hands away from reels, the dispenser, or the cable during wire laying or recovery operations from moving vehicles.

## WARNING

CX-11230/G on reels RC-453/U or DR-15B is heavy (120 pounds). Be careful when moving. Two people required for three(3) foot or lower lift. Four(4) people are required to carry reels RC-453/U or DR-15B more than five(5) steps when loaded with cable.

# 5 SAFETY STEPS TO FOLLOW IF SOMEONE IS THE VICTIM OF ELECTRICAL SHOCK

1. DO NOT TRY TO PULL OR GRAB THE INDIVIDUAL
2. IF POSSIBLE, TURN OFF THE ELECTRICAL POWER
3. IF YOU CANNOT TURN OFF THE ELECTRICAL POWER, PULL, PUSH, OR LIFT THE PERSON TO SAFETY USING A WOODEN POLE OR A ROPE OR SOME OTHER INSULATING MATERIAL
4. SEND FOR HELP AS SOON AS POSSIBLE
5. AFTER THE INJURED PERSON IS FREE OF CONTACT WITH THE SOURCE OF ELECTRICAL SHOCK, MOVE THE PERSON A SHORT DISTANCE AWAY AND IMMEDIATELY START ARTIFICIAL RESUSCITATION

# W A R N I N G

EXTREMELY HIGH VOLTAGES EXIST WHEN YOU ARE USING THE

INSULATION BREAKDOWN TEST SET AN/GSM-6,

VOLTAGES AS HIGH AS 40,000 VOLTS MAY EXIST AT THE FOLLOWING:

- OUTPUT TERMINALS
- OUTPUT CABLE
- CABLE UNDER TEST.

DON'T TAKE CHANCES, BE EXTREMELY CAREFUL

SERIOUS INJURY OR DEATH MAY RESULT IF YOU ARE NOT CAREFUL

# HOW TO USE THIS MANUAL

- This technical manual covers the maintenance procedures for special Pulse Code Modulation (PCM) cables.
- Step-by-step procedures with illustrations will give you all the necessary information to repair TWIN COAX CABLE (CX-11230/G). These steps must be followed in the exact sequence shown. Do not attempt any short cuts.
- Throughout this manual you will find many drawings of cable repair parts. Alongside each part is a solid orange number. This number is the same number as the one listed in the packing list.
- Before attempting any procedure described in this technical manual, you should familiarize yourself with the entire procedure before beginning the job.

AFTER YOU HAVE HAD SOME TIME TO USE THIS MANUAL, TAKE A MOMENT TO LET US KNOW WHAT YOU THINK ABOUT IT. PLEASE USE THE SELF-ADDRESSED QUESTIONNAIRE IN THE BACK OF THE MANUAL. FOLD WHERE SHOWN AND DROP IT IN THE MAIL.

Technical Manual
No. 11-5995-208-24&P

HEADQUARTERS
DEPARTMENT OF THE ARMY
Washington, DC, 26 September 1978

# ORGANIZATIONAL, DIRECT SUPPORT AND GENERAL SUPPORT MAINTENANCE MANUAL FOR CABLE ASSEMBLY, SPECIAL PURPOSE, CX-11230/G (NSN 5995-00-133-9126) AND CABLE ASSEMBLY, ADAPTER CX-10734/G (NSN 5995-00-133-9125) INCLUDING REPAIR PARTS AND SPECIAL TOOLS LIST

Current as of 31 March 1984

**REPORTING ERRORS AND RECOMMENDING IMPROVEMENTS**

You can help improve this manual. If you find any mistakes or if you know of a way to improve the procedures, please let us know. Mail your letter, DA Form 2028 (Recommended Changes to Publications and Blank Forms), or DA Form 2028-2 located in the back of this manual direct to: Commander, US Army Communications-Electronics Command and Fort Monmouth, ATTN: DRSEL-ME-MP, Fort Monmouth, New Jersey 07703. In either case, a reply will be furnished direct to you.



*This manual together with TM 11-5995-208-10 supersedes TM 11-5995-208-15, 9 August 1972.

# CHAPTER 1

## INTRODUCTION

## Section I. GENERAL INFORMATION

### 1-1. Scope

a. This manual covers the practical maintenance and repair procedures for TWIN COAX CABLE (CX-11230/G) and TWIN COAX ADAPTER CABLE (CX-10734/G).

b. The present maintenance program does not include any DIRECT SUPPORT tasks. Organizational Maintenance tests and troubleshoots the cables and General Support Maintenance is responsible for repair. The repair includes special performance tests to make sure the cables work properly.

c. At both Organizational Maintenance and General Support Maintenance, DO NOT try any short cuts or use any parts or lubricants except those called for in this manual.

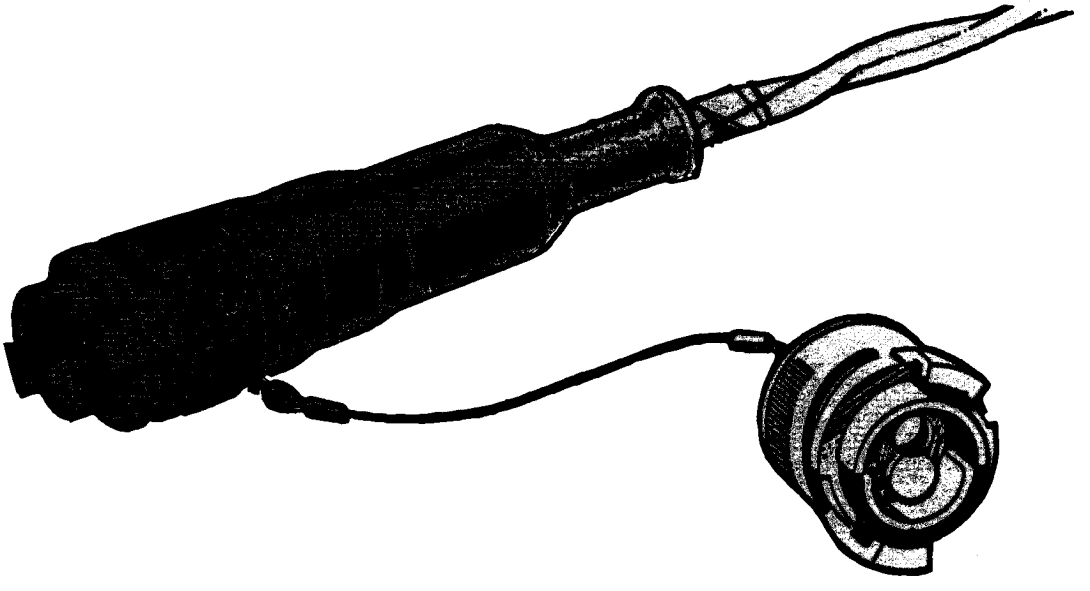

## 1-2. Purpose of Equipment

Provides transmission paths for signals in PCM (pulse code modulation) communications systems.

## 1-3. Maintenance Forms, Records, and Reports

a. Reports of Maintenance and Unsatisfactory Equipment. Department of the Army forms and procedures used for equipment maintenance will be those prescribed by TM 38-750, The Army Maintenance Management System (TAMMS).

b. Report of Packaging and Handling Deficiencies. Fill out and forward SF 364 (Report of Discrepancy (ROD)) as prescribed in AR 735-11-2.

c. Discrepancy in Shipment Report (DISREP) (SF 361). Fill out and forward Discrepancy in Shipment Report (DISREP) (SF 361) as prescribed in AR 55-38.

1-4. [redacted]

Destruction of Army electronics materiel to prevent enemy use shall be in accordance with TM 750-244-2.

**1-5.** [redacted]

The storage of these PCM cables must be carefully done. Complete instructions will be found in Chapter 2 in this manual.

1-6. [redacted]

After OVERHAUL or FABRICATION or SCREENING of TWIN COAX CABLE (CX-11230/G) the cable must be checked using the performance standards found in Chapter 3 in the manual.

1-7. [redacted]

If your equipment needs improvement, let us know. Send us an EIR. You, the user, are the only one who can tell us what you don't like about your equipment. Let us know why you don't like the design. Tell us why a procedure is hard to perform. Put it on an SF 368 (Quality Deficiency Report). Mail it to Commander, US Army Communications-Electronics Command, ATTN: DRSEL-ME-MQ, Fort Monmouth, New Jersey 07703. We'll send you a reply.

## 1-8. NOMENCLATURE CROSS-REFERENCE LIST

| Common Name | Official Nomenclature and Packing List Item Number |
|---|---|
| BOOT | Boot, Sealing |
| SUPPORT BRAID COLLET | Collet, Support, Braid |
| CLAMP NUT | Nut, Clamp |
| FRICTION BUSHING | Bushing, Friction |
| SUPPORT BRAID CONE | Cone, Support, Braid |
| SPLIT WASHER | Washer, Split |
| MAIN BODY | Body, Main |
| PREASSEMBLED CLAMP NUT | Nut, Clamp, pre-assembled with HEX NUT (27) |
| CLAMP BUSHING | Bushing, Clamp |
| FERRULE | Ferrule |
| LARGE O'RING | Packing, Preformed |
| REAR INSULATOR | Insulator, Rear |

NOMENCLATURE CROSS-REFERENCE LIST cont'd

| | | |
|---|---|---|
| MAIN BODY INSULATOR | Insulator, Main Body | 13 |
| O'RING | Packing, Preformed (Usually found installed on items 19and 22) | 14, 19, 22 |
| O'RING | Packing, Preformed | 15 |
| COUPLING NUT | Nut, Coupling | 16 |
| FEMALE BODY ASSEMBLY | Body Assembly, Female | 17 |
| MALE CONTACT | Contact, Male | 18 |
| FRONT MALE INSULATOR | Insulator, Front, Male, Pre-assembled with 1 each Item No. 14 | 19, 14 |
| MALE BODY ASSEMBLY | Body Assembly, Male | 20 |
| FEMALE CONTACT | Contact, Female | 21 |
| FRONT FEMALE INSULATOR | Insulator, Front, Female, Pre-assembled with 1 each Item No. 14 | 22, 14 |
| NON–METALLIC WASHER | Washer, Non-metallic | 23 |
| O'RING | Packing, Preformed | 24 |
| SCREW | Screw, Self Locking | 25 |

**NOMENCLATURE CROSS-REFERENCE LIST** cont'd

| | |
|---|---|
| WASHER | Washer |
| HEX NUT | Nut, Plain, Hexagon (packed with Item No. 8) |
| CAP ASSEMBLY | Cap Assembly |
| INSULATION SLEEVE | Insulation, Sleeving, Electrical |
| RING | Ring |
| SLEEVE | Sleeve |
| UNATTENDED REPEATER | Restorer, Pusle Form TD-206 (*)/G. |
| ATTENDED REPEATER | Multiplexer TD-754/G. |
| MUX equipment | Multiplexer TD-202/U or TD-203/U or TD-204/U. |
| PCM | Pulse Code Modulation, special electronic circuits in MUX equipment which make possible the sending and receiving of many signals or channels over a cable. |
| ORDER WIRE | A special circuit in MUX equipment which permits operators to talk to each other without disturbing the PCM signals. |
| TELEPHONE TEST SET | Test Set, Telephone, AN/PTM-7. |

## SECTION II

## EQUIPMENT DESCRIPTION AND DATA

### 1-9. EQUIPMENT CHARACTERISTICS, CAPABILITIES AND FEATURES

a. **TWIN COAX CABLE (CX-1230/G).**

- Contains two small coaxial cables.
- Carries up to 48 channels of PCM signals.
- Can be laid on the ground, suspended from poles or trees, or buried.
- Requires an UNATTENDED REPEATER at the end of each mile (1.6 kilometers) of cable.
- Cable also carries dc power for the UNATTENDED REPEATER.

  This dc power is supplied by the MUX equipment connected to the cable.
- Requires an ATTENDED REPEATER every 40 miles (64 kilometers).
- Available in 100 foot (30.48 meters) or one-quarter mile (402 meters) lengths.

b. **TWIN COAX ADAPTER CABLE (CX-10734/G).**

- Overall length is 4 feet (1.2 meters). Weight is 3 pounds.
- Contains the same type small coaxial cables as TWIN COAX CABLE (CX-11230/G).
- Used to connect TWIN COAX CABLE (CX–11230/G) to:

  MUX equipment

  or

  early model UNATTENDED REPEATERS

  or

  ATTENDED REPEATERS

  or

  other PCM cables like the CX–4245/G.

## 1-10. PERFORMANCE DATA

a. TWIN COAX CABLE (CX-11230/G).

- CHANNEL CAPACITY

  6, 12, 24 or 48 channels.

- INSULATION QUALITY

  Each coaxial cable can withstand up to 2,500 volts dc between its center conductor and its shield.

- INSULATION RESISTANCE

  For each coaxial cable, 50,000 megohms between its center conductor and its shield.

- CHARACTERISTIC IMPEDANCE

  55 to 65 ohms in the range of 400 kHz to 1,000 kHz.

  55 to 60 ohms in the range of 1,000 kHz to 3,000 kHz.

- DC RESISTANCE OF THE CENTER CONDUCTOR IN EACH COAXIAL CABLE

  22 ohms for each 1,320 feet (1/4 mile or 402 meters).
  when the temperature is 20 degrees Celsius.

- DC RESISTANCE OF THE SHIELD IN EACH COAXIAL CABLE

  7½ ohms for each 1,320 feet (1/4 mile or 402 meters).
  when the temperature is 20 degrees Celsius.

- SIGNAL ATTENUATION

  8.5 dB per mile (1.6 kilometers) at 100 kHz.

  38 dB per mile (1.6 kilometers) at 2,000 kHz.

- TENSILE STRENGTH OF CABLE

  600 pounds.

- TENSILE STRENGTH OF CABLE-TO-CONNECTOR JUNCTION

  400 pounds.

- WEIGHT

  8 pounds for 100 foot length and 77 pounds for 1/4 mile length.

**PERFORMANCE DATA** cont'd

SPAN AND MINIMUM SAG SPECIFICATIONS

100 foot (30.4 meters) span should have a minimum sag of 16 inches (41 centimeters).

125 foot (38.1 meters) span should have a minimum sag of 24 inches (61 centimeters).

150 foot (45.7 meters) span should have a minimum sag of 36 inches (.9 meters).

175 foot (54.3 meters) span should have a minimum sag of 48 inches ( 1.2 meters).

200 foot (61 meters) span should have a minimum sag of 72 inches (1.8 meters). **SPAN**

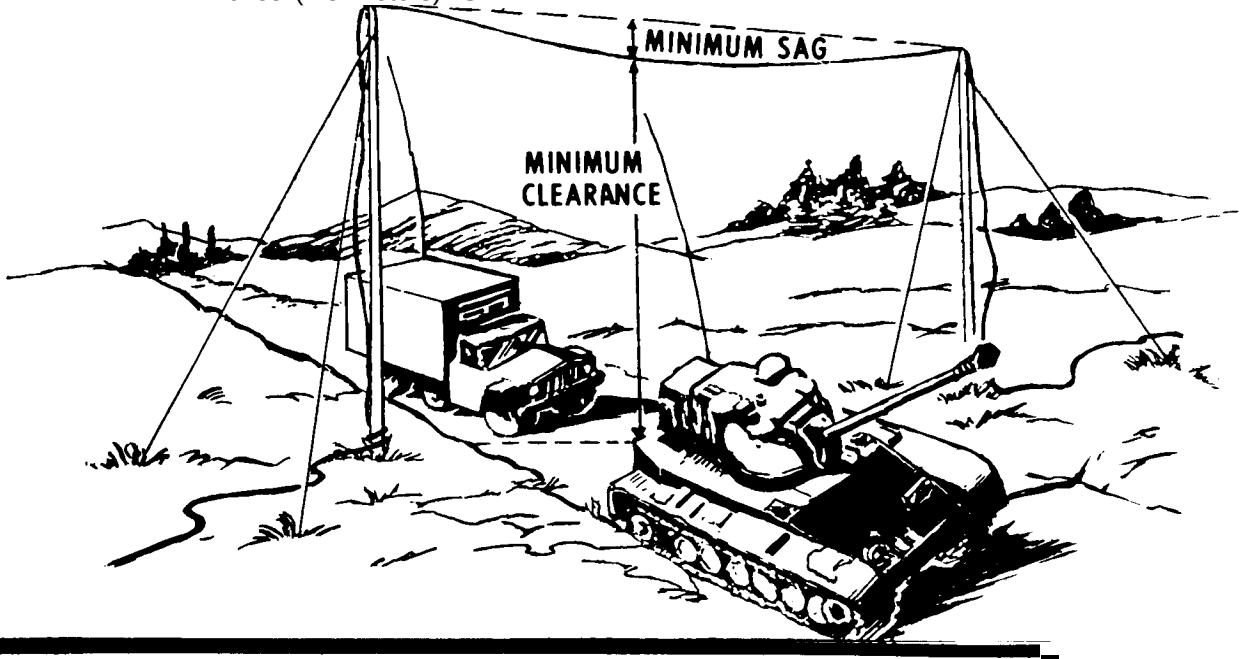


**NOTE 1.** **If the span distance falls between two of the above span distances, use the higher minimum sag. Example; A span of 162 feet should have a minimum sag of 48 inches.**

**NOTE 2.** **If the span is greater than 200 feet, use a MESSENGER CABLE. Follow the techniques in FM 24-20.**

WARNING

BE SURE YOU KNOW WHAT THE MINIMUM CLEARANCE IS BEFORE YOU HANG YOUR CABLE. YOUR SUPERVISOR OR TEAM CHIEF SHOULD GIVE YOU SPECIFIC CLEARANCE HEIGHTS BEFORE YOU START OUT ON YOUR CABLE LAYING MISSION.

WARNING

DO NOT PUT CABLE CONNECTORS IN THE SPAN

**PERFORMANCE DATA cont'd**

b. TWIN COAX ADAPTER CABLE (CX-10734/G).

- CANNOT BE USED IN A SPAN
- TENSILE STRENGTH

  45 pounds at the ends connected to the UG–1871/U connector or the UG–1872/U connector.

- CAPACITY AND TRANSMISSION CHARACTERISTICS

  Data for TWIN COAX CABLE (CX-11230/G) apply.

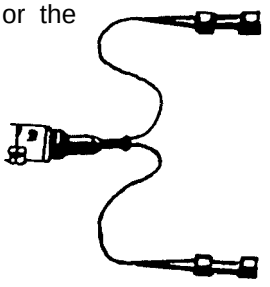

**1-11. TYPICAL APPLICATION OF TWIN COAX CABLE (CX-11230/G) AND TWIN COAX ADAPTER CABLE (CX-10734/G) cont'd**

a. Use with late model UNATTENDED REPEATERS.

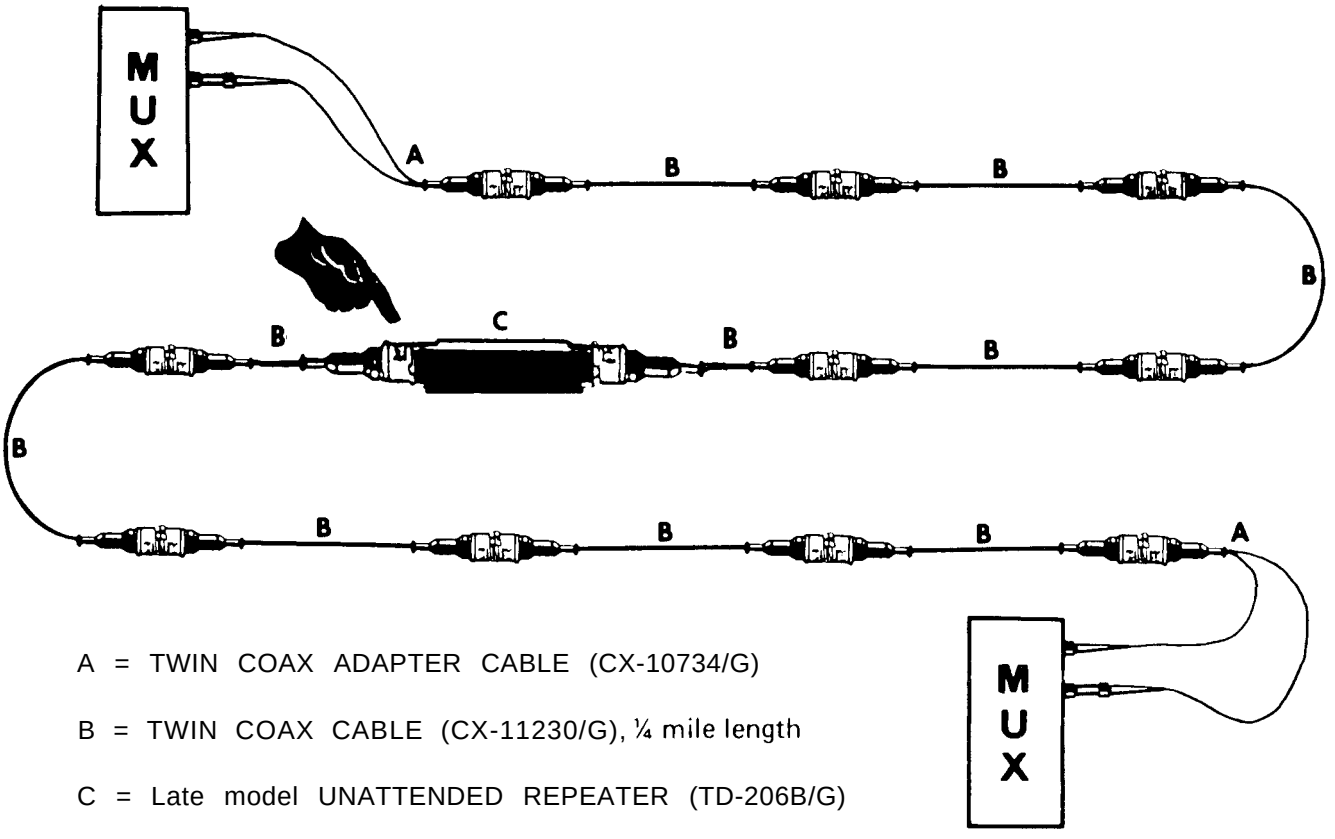


A = TWIN COAX ADAPTER CABLE (CX-10734/G)

B = TWIN COAX CABLE (CX-11230/G), ¼ mile length

C = Late model UNATTENDED REPEATER (TD-206B/G)

**TYPICAL APPLICATION OF TWIN COAX CABLE (CX-11230/G) AND TWIN COAX ADAPTER CABLE (CX-10734/G) cont'd**

b. USE WITH EARLY MODEL UNATTENDED REPEATERS.

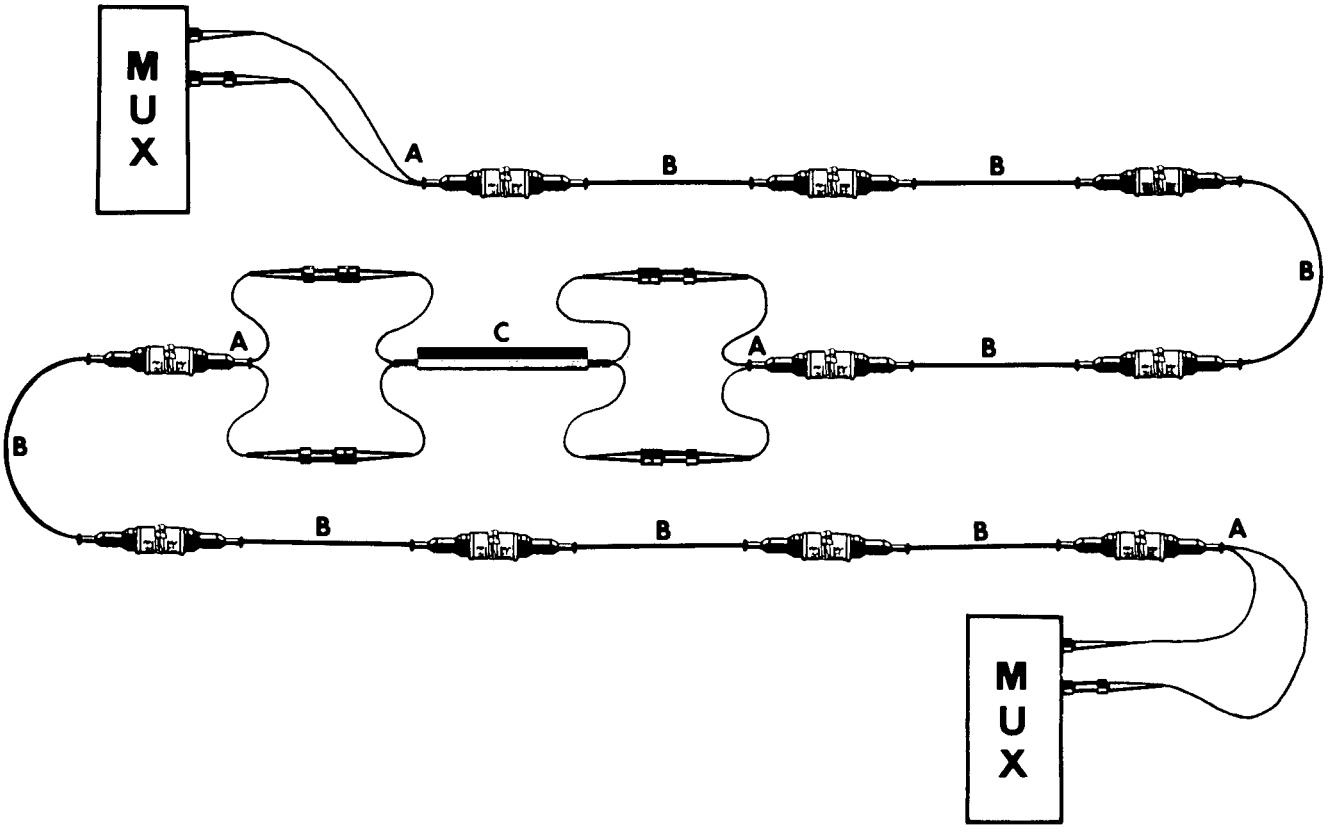


A = TWIN COAX ADAPTER CABLE (CX-10734/G)
B = TWIN COAX CABLE (CX-1 1230/G)
C = early model UNATTENDED REPEATER (TD-206/G)

# CHAPTER 2

## ORGANIZATIONAL MAINTENANCE

Section I. REPAIR PARTS, SPECIAL TOOLS AND TEST-MEASURING-DIAGNOSTIC EQUIPMENT

### 2-1. REPAIR PARTS

**Organizational maintenance is authorized to perform the following:**

**a. Replacement of the CAP (part of the CAP ASSEMBLY) on CONNECTOR (UG-1870/U).**

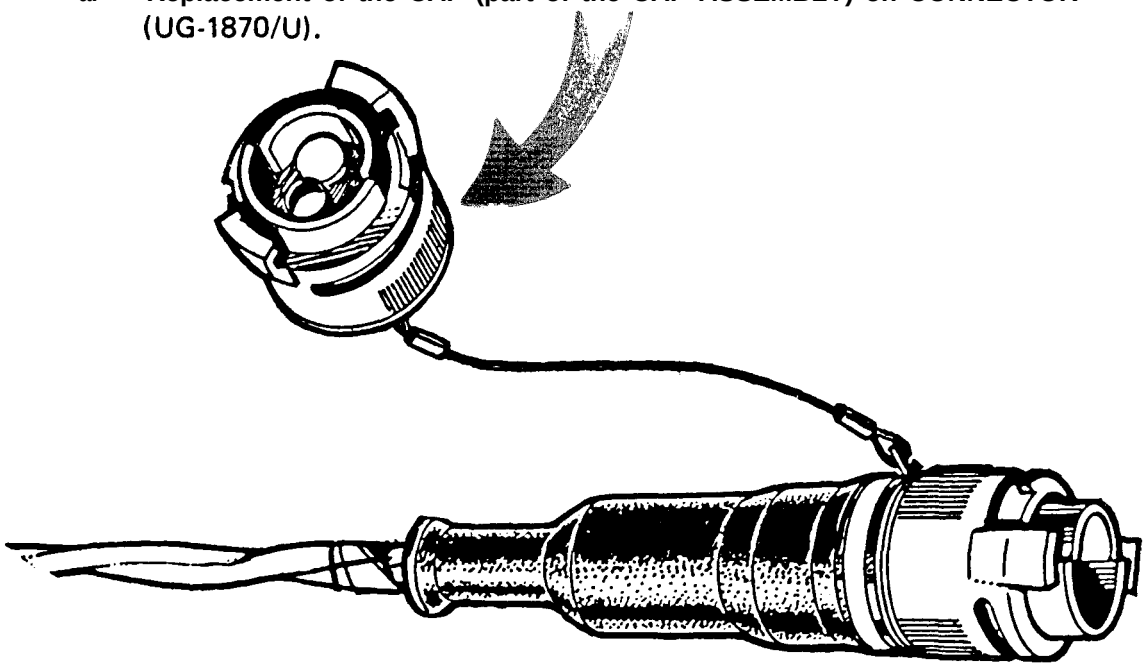

**b. Tightening the SCREW holding the screw lug on the retaining wire connected to the CAP.**

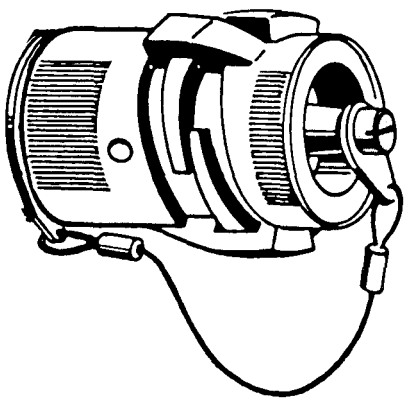

## 2-2. SPECIAL TOOLS

The tools authorized for organizational maintenance are listed in Appendix B.

## 2-3. TEST-MEASURING-DIAGNOSTIC EQUIPMENT

The following is authorized for organizational maintenance:

TELEPHONE TEST SET (AN/PTM-7)

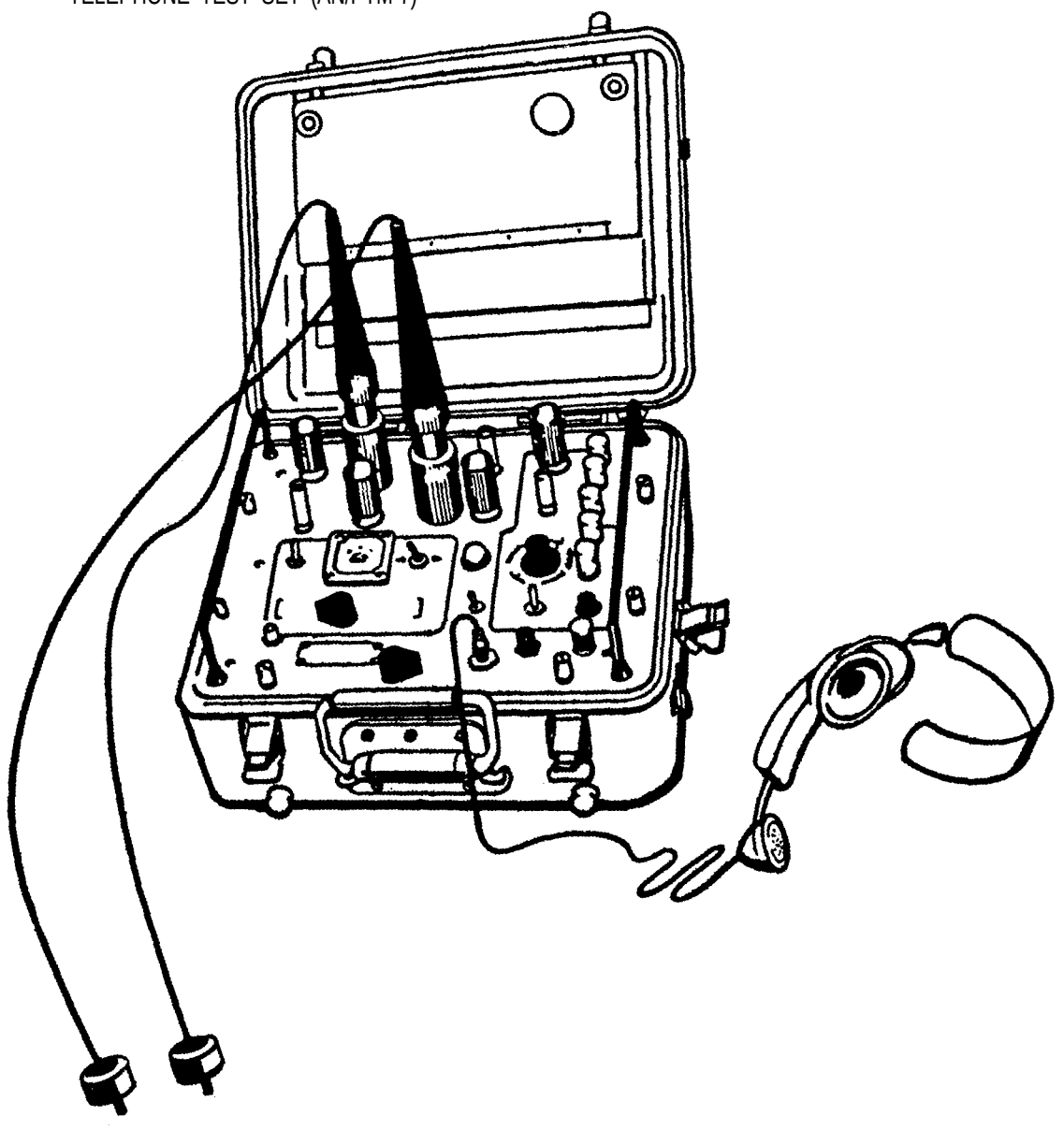

Section II. SERVICE UPON RECEIPT

## 2-4. INITIAL INSPECTION

Never assume that newly received TWIN COAX CABLES (CX-11230/G) or TWIN COAX ADAPTER CABLES (CX-10734/G) are all perfectly serviceable. Upon receipt, carefully perform a visual inspection to make sure that:

a. ALL CONNECTORS (UG-1870/U) are properly capped.

b. An ID tag is attached with the following information:


(1) NOMENCLATURE.

(2) LENGTH.

(3) YEAR and MONTH.

(4) TYPE of ACTION:

SCR for SCREENED
or
OVH for OVERHAULED
or
FAB for FABRICATED.

(5) UNIT IDENTIFICATION (who did the OVH or FAB or SCR).

> NOTE
> You may not find this tag on older cables.

c. All reels are sound and can be used on the proper reel machine.

## 2.5. QUALITY CHECK

a. Do all the PMCS Items in Table 2-1.

b. Perform a dynamic test.

> NOTE
>
> Your organization should have a standard procedure for checking the quality of newly received cables.
>
> This procedure should include a performance test with the cables connected in a working PCM circuit with the MUX equipment.

## Section III. ORGANIZATIONAL PREVENTIVE MAINTENANCE CHECKS AND SERVICES

### 2-6. GENERAL

To be sure that your cables will be able to support your mission, you must do scheduled PREVENTIVE MAINTENANCE CHECKS AND SERVICES (Table 2-1).

BEFORE cables are placed in storage, do all the PMCS items. This will help you keep your cables in top shape.

AFTER cables are removed from storage, and before releasing to a cable laying crew, do all the PMCS items to make sure your cables are ready to go.

MONTHLY PMCS are important steps you should do on cables belonging to your unit and which are not hooked up to an operating system. These steps should keep serious problems from suddenly happening. If you waited to do a PMCS on these cables just before your mission, you may find that you do not have enough cables.

**NOTE**

Use the ITEM NO. column in your PMCS table to get the numbers for the TM ITEM NO. column on DA Form 2404 (Equipment Inspection and Maintenance Worksheet) when you fill out the form.

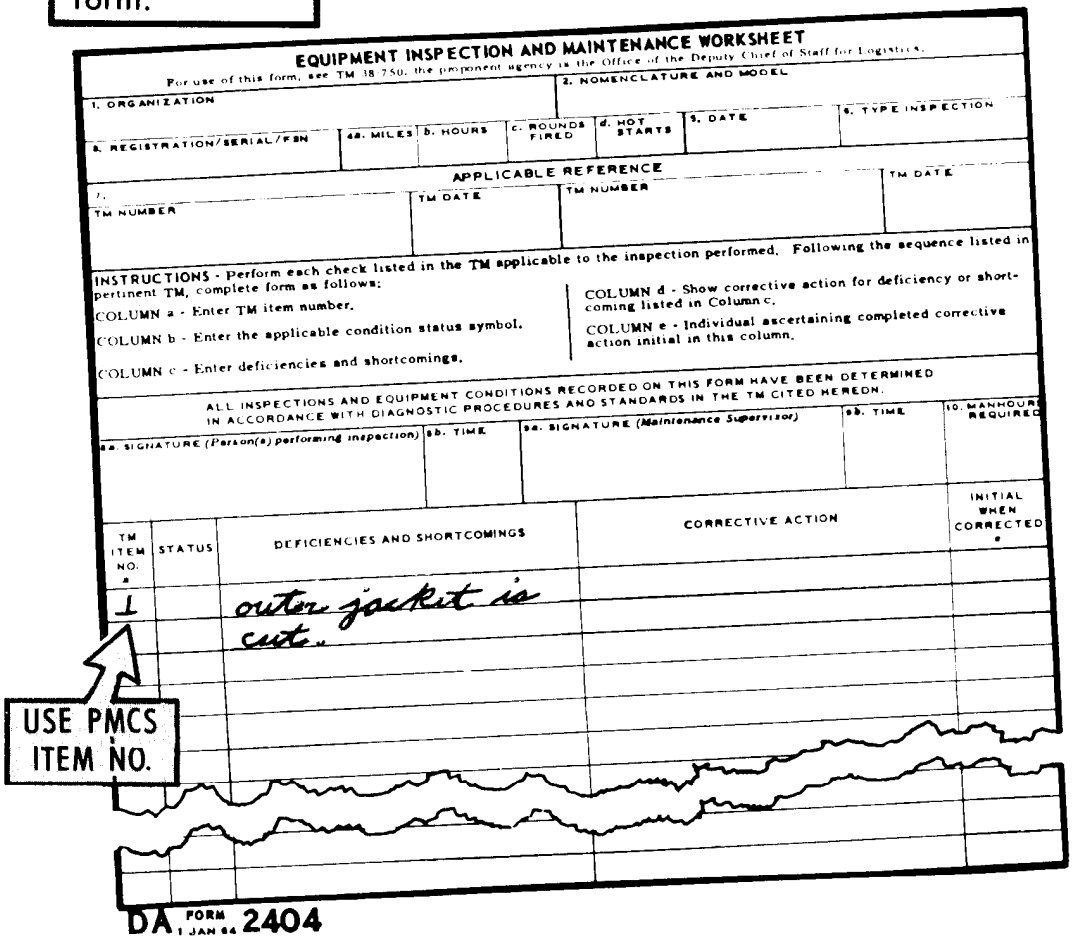
EQUIPMENT INSPECTION AND MAINTENANCE WORKSHEET

For use of this form, see TM 38-750; the proponent agency is the Office of the Deputy Chief of Staff for Logistics.

1. ORGANIZATION | 2. NOMENCLATURE AND MODEL

3. REGISTRATION/SERIAL/FSN | 4a. MILES | b. HOURS | c. ROUNDS FIRED | d. HOT STARTS | 5. DATE | 6. TYPE INSPECTION

APPLICABLE REFERENCE

7. TM NUMBER | TM DATE | TM NUMBER | TM DATE

INSTRUCTIONS - Perform each check listed in the TM applicable to the inspection performed. Following the sequence listed in pertinent TM, complete form as follows:

COLUMN a - Enter TM item number.

COLUMN b - Enter the applicable condition status symbol.

COLUMN c - Enter deficiencies and shortcomings.

COLUMN d - Show corrective action for deficiency or shortcoming listed in Column c.

COLUMN e - Individual ascertaining completed corrective action initial in this column.

ALL INSPECTIONS AND EQUIPMENT CONDITIONS RECORDED ON THIS FORM HAVE BEEN DETERMINED IN ACCORDANCE WITH DIAGNOSTIC PROCEDURES AND STANDARDS IN THE TM CITED HEREON.

8a. SIGNATURE (Person(s) performing inspection) | 8b. TIME | 9a. SIGNATURE (Maintenance Supervisor) | 9b. TIME | 10. MANHOURS REQUIRED

| TM ITEM NO. a | STATUS | DEFICIENCIES AND SHORTCOMINGS | CORRECTIVE ACTION | INITIAL WHEN CORRECTED e |
|---|---|---|---|---|
| 1 | | outer jacket is cut. | | |

USE PMCS ITEM NO.

DA FORM 1 JAN 64 2404

2-7. [redacted]

The following are ROUTINE CHECKS AND SERVICES and are not listed in your PMCS table. These checks and services should be done anytime you see that they must be done.

a. Cleaning the outer black plastic jacket on all cables.

(1) Use clear water and a clean rag to remove mud and dirt.

(2) Use soapy water and then rinse with clear water to remove oil or grease.

CAUTION: Do not use SOLVENTS.

b. Capping CONNECTOR UG-1870/U.

(1) Always cap it when not in use (including storage).

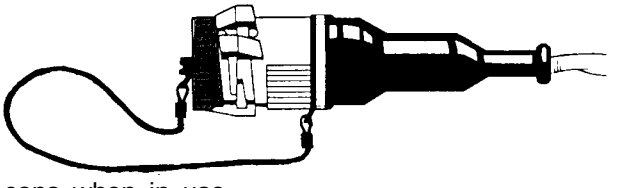

(2) Always mate the caps when in use.

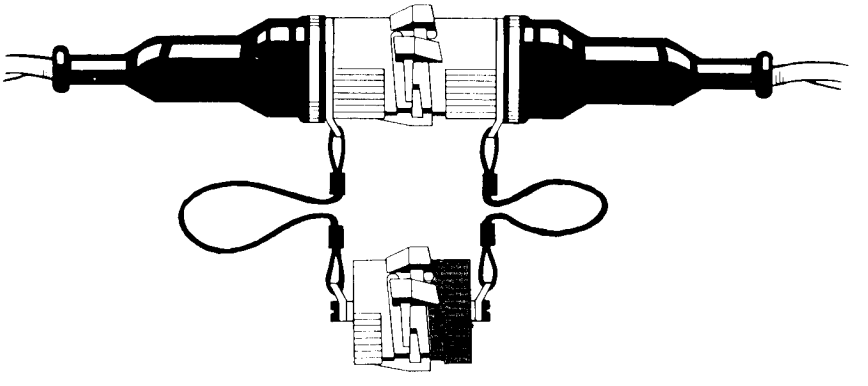

c. Connectors UG-1871/U and UG-1872/U.

(1) Always mate them to each other when not in use (including storage).

NOTE

If you find what you consider a ROUTINE CHECK AND SERVICE in the PMCS table, it was listed because other organizations reported it as a critical procedure.

Table 2-1. ORGANIZATIONAL PREVENTIVE MAINTENANCE CHECKS AND SERVICES

M = **MONTHLY** on cables belonging to your unit which are not installed in a system.

| ITEM NO. | INTERVAL M | ITEM TO BE INSPECTED | PROCEDURES ★ CORRECTIVE ACTION TO BE DONE BY HIGHER LEVEL MAINTENANCE. |
|---|---|---|---|
| 1 | ● | OUTER JACKET OF ALL CABLES | Visually inspect outer windings of cable on each reel to make sure that the black plastic outer jacket is not damaged. |
| 2 | ● | CONNECTOR (UG-1870/U) ON ALL CABLES | Check for:<br>★ A. Cracks in the MAIN BODY INSULATOR.<br>★ B. Cracks in the FRONT MALE INSULATOR or FRONT FEMALE INSULATOR.<br>★ C. Dirty or greasy or bent male or female contacts.<br>★ D. Missing or improperly seated NON-METALIC WASHER on the face of the MALE BODY ASSEMBLY. |

| | | | |
|---|---|---|---|
| 3 | ● | UG-1871/U and UG-1872/U Connectors on TWIN COAX ADAPTER CABLE (CX-10734/G) | ★ E. Missing Self Locking SCREW(S). 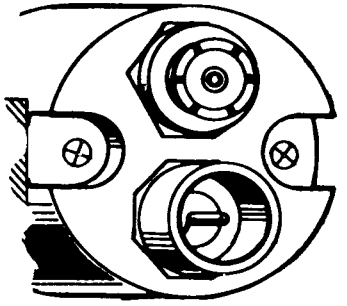 ★ F. Properly seated BOOT. 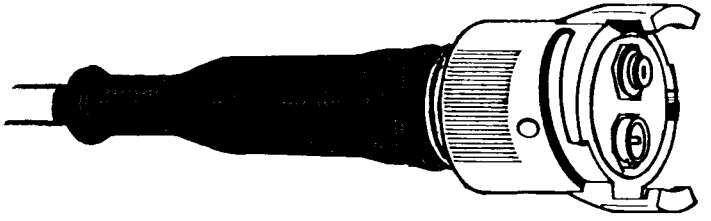 G. Missing CAP. H. Loose screw. 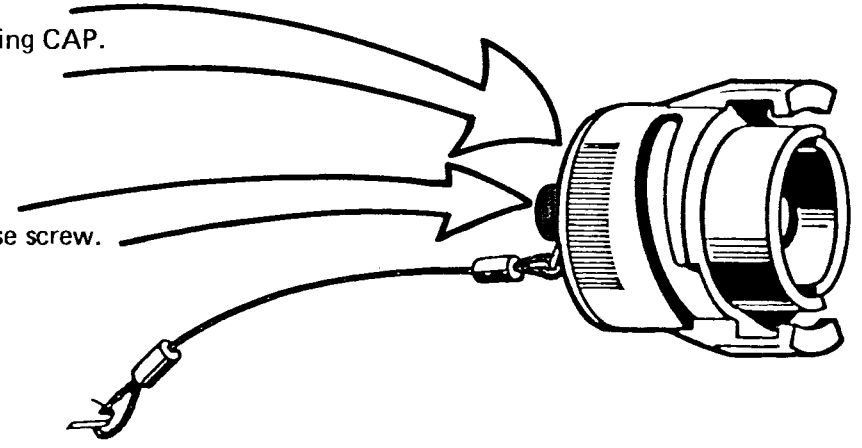 ★ Check for damage and for proper mating. 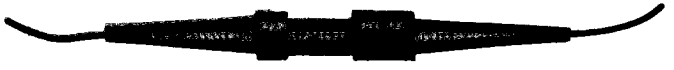 |

Table 2-1. ORGANIZATIONAL PREVENTIVE MAINTENANCE CHECKS AND SERVICES (con't)

M = MONTHLY on cables belonging to your unit which are not installed in a system and not in storage.

| ITEM NO. | INTERVAL M | ITEM TO BE INSPECTED | PROCEDURES ★ CORRECTIVE ACTION TO BE DONE BY HIGHER LEVEL MAINTENANCE. |
|---|---|---|---|
| 4 | ● | Cable Assembly, Special Purpose, Electrical CX-11230/G | Use Telephone TestSet AN/PTM-7 to test twin coaxial cable assembly. 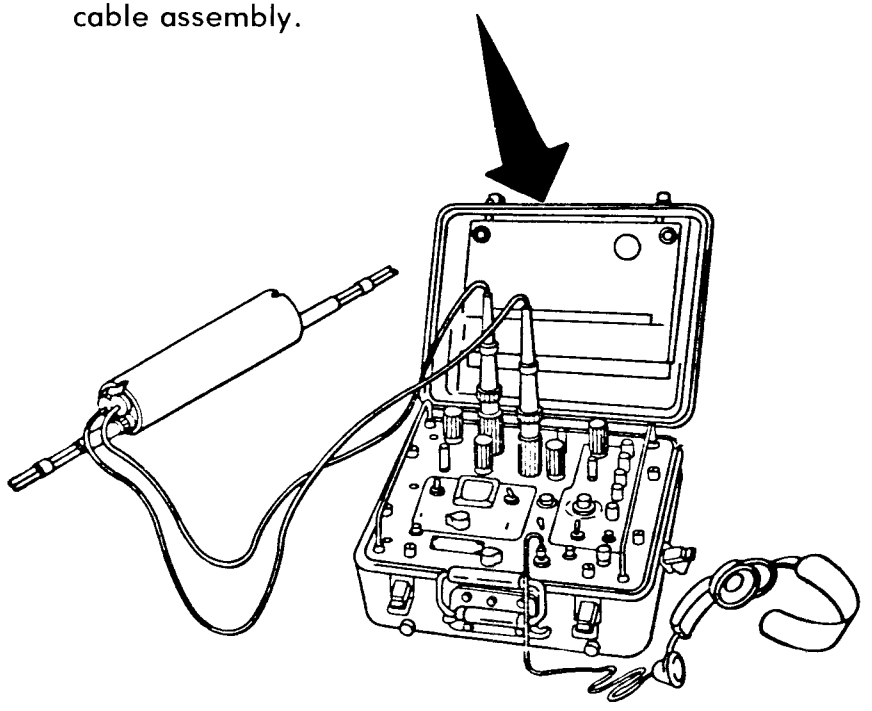 |

Section IV. TROUBLESHOOTING

## 2-8. TESTING AND TROUBLESHOOTING

TELEPHONE TEST SET (AN/PTM-7) is used to test and troubleshoot a PCM cable hookup of TWIN COAX CABLES (CX-11230/G), TWIN COAX ADAPTER CABLES (CX-10734/G) and UNATTENDED REPEATERS (TD-206(*)/G). Instructions in TM 11-6625-648-12 will tell you how to use this test set to:

a. Locate faults in the PCM cable system.

b. Determine the location of an OPEN CIRCUIT or SHORT CIRCUIT in TWIN COAX CABLE (CX-11230/G) up to one mile away from where you connected the TELEPHONE TEST SET (AN/PTM-7).

c. Localize the trouble in an UNATTENDED REPEATER (TD-206(*)/G) to one of the two circuit paths.

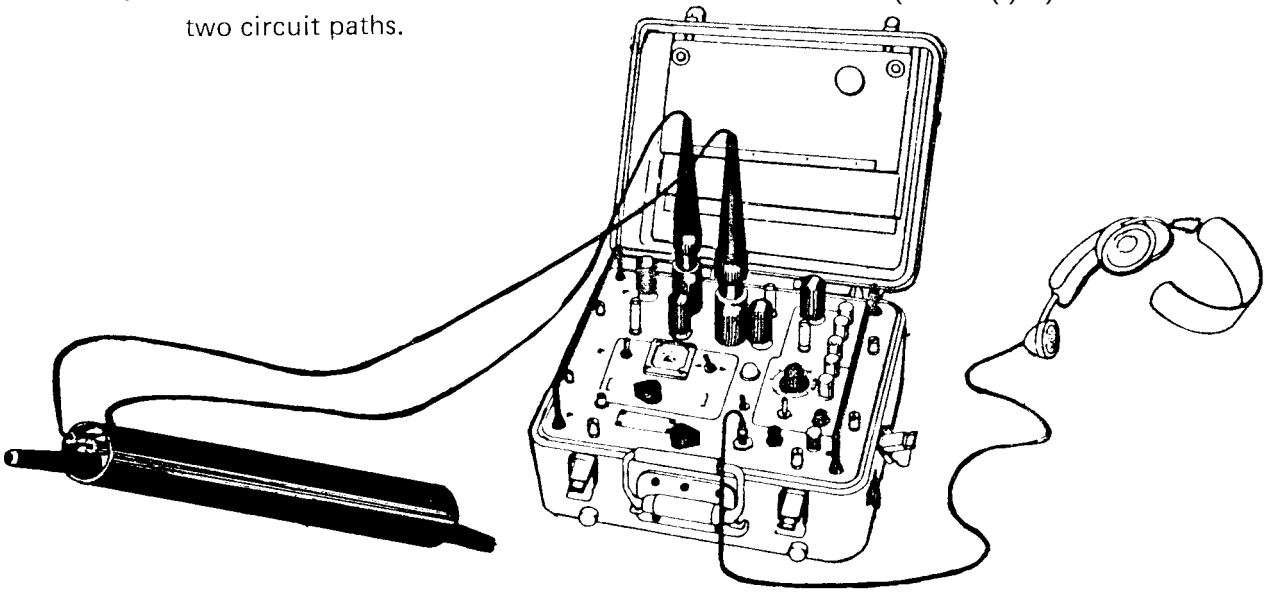

d. Provide ORDER WIRE communications between the operator of the TELEPHONE TEST SET (AN/PTM-7) and the MUX equipment operators.

WARNING

WHEN YOU ARE TROUBLESHOOTING, DO NOT OPEN ANY CABLE CONNECTION.

OPENING A CONNECTION CAN EXPOSE YOU TO A FATAL SHOCK BY HIGH VOLTAGE.

BUT,

IF YOU FIND IT IS NECESSARY TO REMOVE OR REPLACE A COMPONENT OR PIECE OF CABLE IN THE SYSTEM,

USE YOUR ORDER WIRE HOOKUP

AND CALL THE MUX EQUIPMENT OPERATORS AND TELL THEM TO REMOVE THE POWER FROM THE CABLE HOOKUP.

## 2-9. [redacted] ASSEMBLY ON CONNECTOR (UG-1870/U)

This task covers:

a. Replacing a defective or missing CAP

b. Tightening a loose SCREW on a CAP ASSEMBLY

INITIAL SETUP

Special Tools:

Tool Kit TK-101/G

Personnel Required:

1

Materials/Parts:

Replacement CAP

Loctite Compound

[redacted]

Remove the SCREW from the CAP.

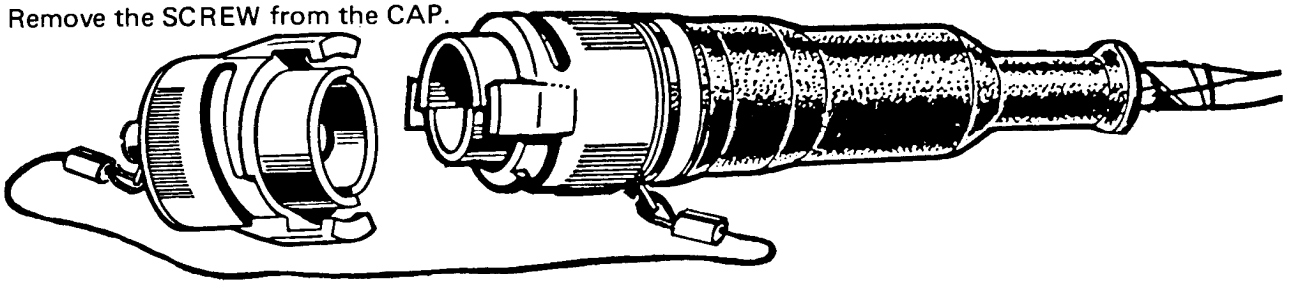

[redacted]

Place ONE DROP of Loctite compound in the threaded hole of the CAP.

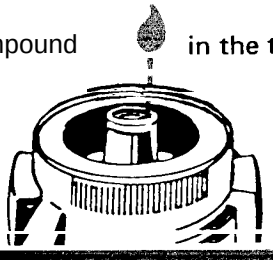

[redacted]

Connect the screw lug on the retaining wire to the back of the CAP with the SCREW.

Tighten the SCREW.

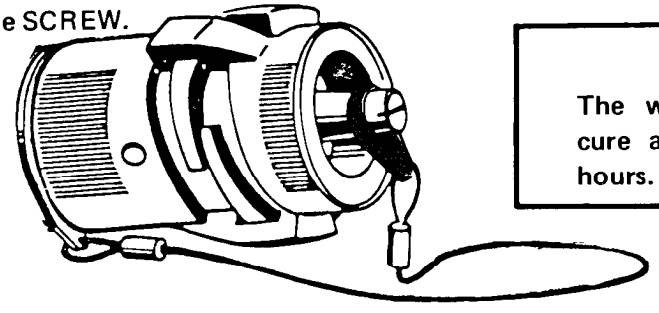

**NOTE**

**The work should be allowed to cure at room temperature for 24 hours.**

## Section VI. STORAGE

### 2-10. [redacted]

Storage of TWIN COAX CABLES (CX-11230/G) and TWIN COAX CABLE ADAPTERS (CX-10734/G) for ANY period of time requires careful planning. The storage area should be protected from the elements and drastic changes in temperature and humidity.

CAUTION: Never assume that these cables cannot develop troubles while they are in storage.

a. Before storing these cables on their reels, do ALL of the ROUTINE CHECKS AND SERVICES listed in paragraph 2-7 and ALL of the items in the PMCS Table 2-1.

WARNING

WHEN STACKING REELS OF CABLE, DO NOT STACK THEM TOO HIGH.

STACK THEM SO THAT ANY MEMBER OF THE CREW, TALL OR SHORT CAN SAFELY HANDL.E THE REELS.

REELS STACKED TOO HIGH OR CARELESSLY STACKED ARE A SERIOUS SAFETY HAZARD.

b. After removing the cables from storage, do ALL of the items in the PMCS Table 2-1.

# CHAPTER 3

## GENERAL SUPPORT MAINTENANCE

## Section I. REPAIR PARTS, SPECIAL TOOLS, AND TEST-MEASURING-DIAGNOSTIC EQUIPMENT

### 3-1. REPAIR PARTS

General support maintenance is authorized to install or replace CONNECTOR (UG-1870/U). This is done when it is necessary to:

a. Replace defective or missing CONNECTORS (UG-1870/U) on TWIN COAX CABLES (CX-11230/G).

> NOTE
> No repair is performed on Twin COAX CABLE ADAPTER (CX-10734/G)

### 3-2. SPECIAL TOOLS

The tools authorized for general support maintenance are listed in Appendix B.

### 3-3. TEST-MEASURING-DIAGNOSTIC EQUIPMENT

The TMDE authorized for general support maintenance is listed in Appendix B.

## Section II. SERVICE UPON RECEIPT

### .3-4. INSPECTION AND ACTIONS

> NOTE
> No splicing of cables is authorized at any level of maintenance

All returned cables shall be inspected and acted upon as follows:

a. First, do all the PMCS items in Table 2-1.

b. All cables passing the PMCS procedures will then undergo a dynamic test using the PERFORMANCE STANDARDS in this chapter.

c. The repair action for all TWIN COAX CABLES (CX-11230/G) that do not pass the dynamic test will be determined by the supervisor.

d. No repair action is done on TWIN COAX CABLE ADAPTERS (CX-10734/U) which fail the dynamic test.

## Section III. STORAGE

### 3-5. GENERAL

Storage procedures for these cables should follow those outlined in paragraph 2-10.

## Section IV. TWIN COAX CABLE (CX-1125

### 3-6. Replacing Connector

This task covers:

a. Removal
b. Replacement

INITIAL SETUP

Test Equipment:
Multimeter, TS-352 B/U

Special Tools:
Tool Kit TK–100/G, torque wrench

Materials/Parts:
One complete UG–1870/U Connector Kit.

Personnel Required:
2

Special Environmental Conditions:
Perforrm all steps in an area free of drafts and dust.

STEP 1

Remove the old connector by cutting through the cable as close as possible to the old connector. Discard the old connector.

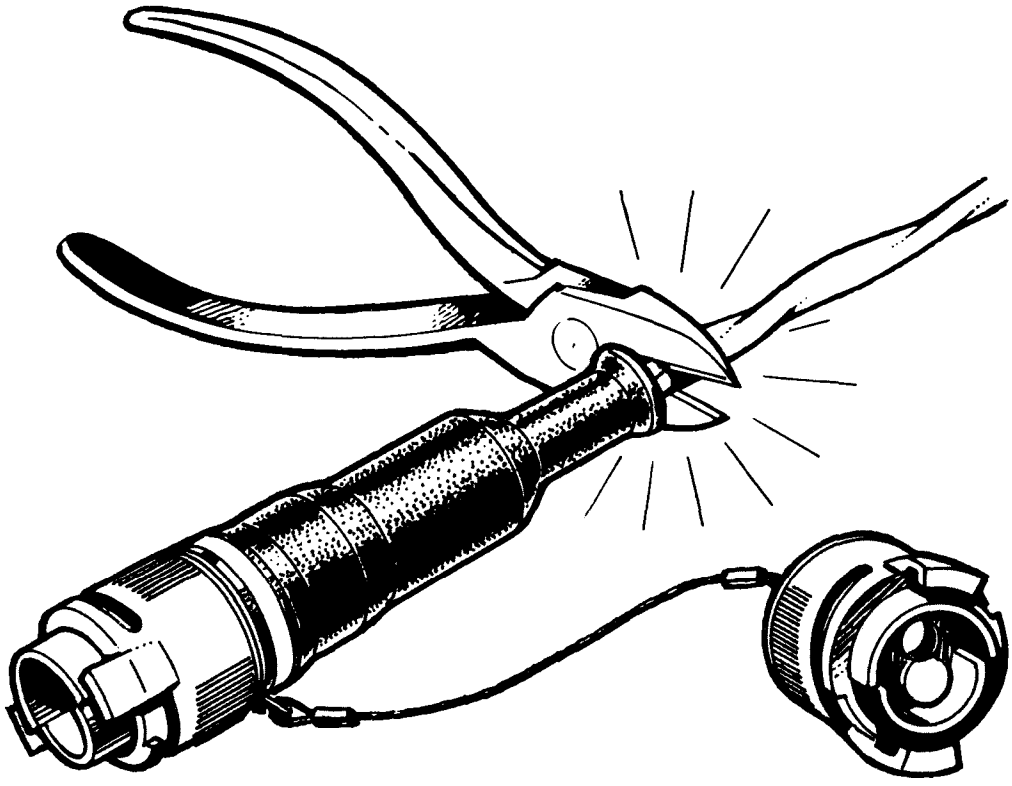

NOTE

Minimum length of cable after replacement of the connector is 1220 feet for the 1/4 mile cable, and 90 feet for the 100 foot cable.

STEP 2

Layout the parts on your workbench as shown below. The number appearing after

CAUTION: **Many of the parts are coated with sealants and lubricants. DO NOT remove**

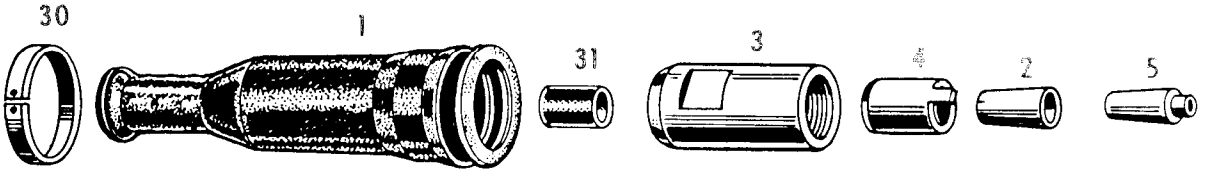


Then lay out these parts in a clean tray or on a lint-free cloth.

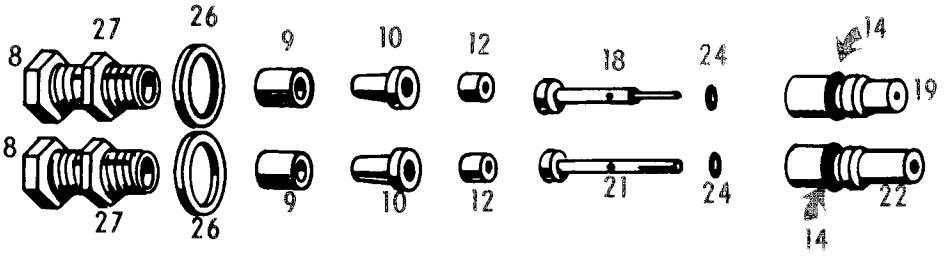


NOTE

In the steps that follow, reference is made to installing prelubricated parts. If you find that these parts are not lubricated, use a SMALL amount of LUBRICANT, Type DC-4 to lubricate them

each part is the same number as the one listed in the packing list.

**these materials from the parts or allow the parts to become dirty.**

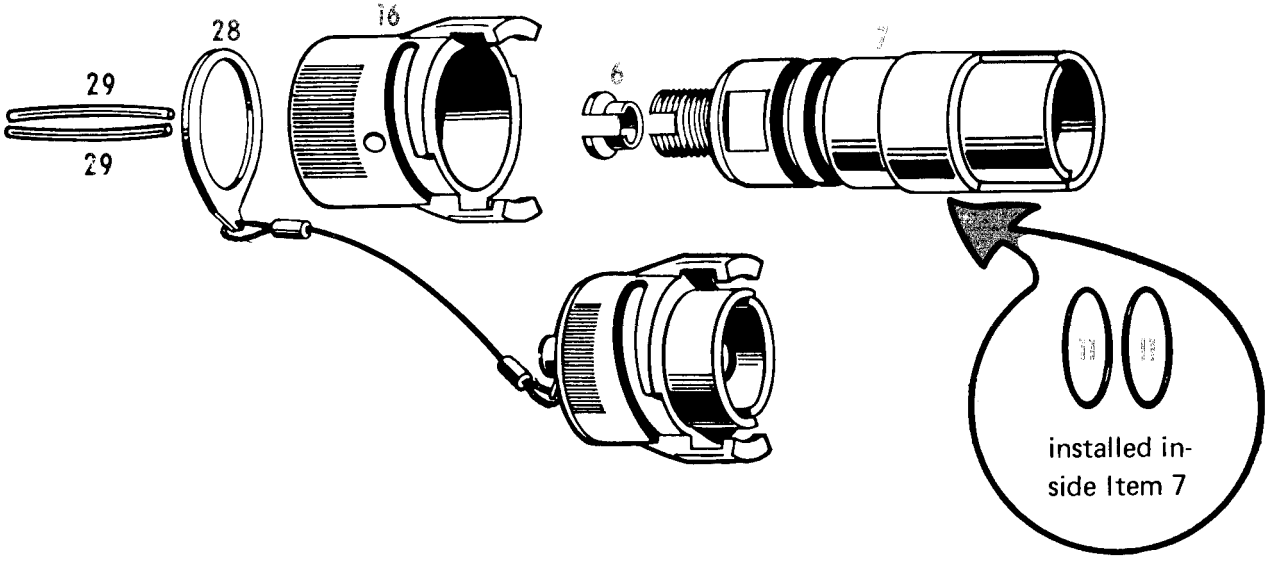


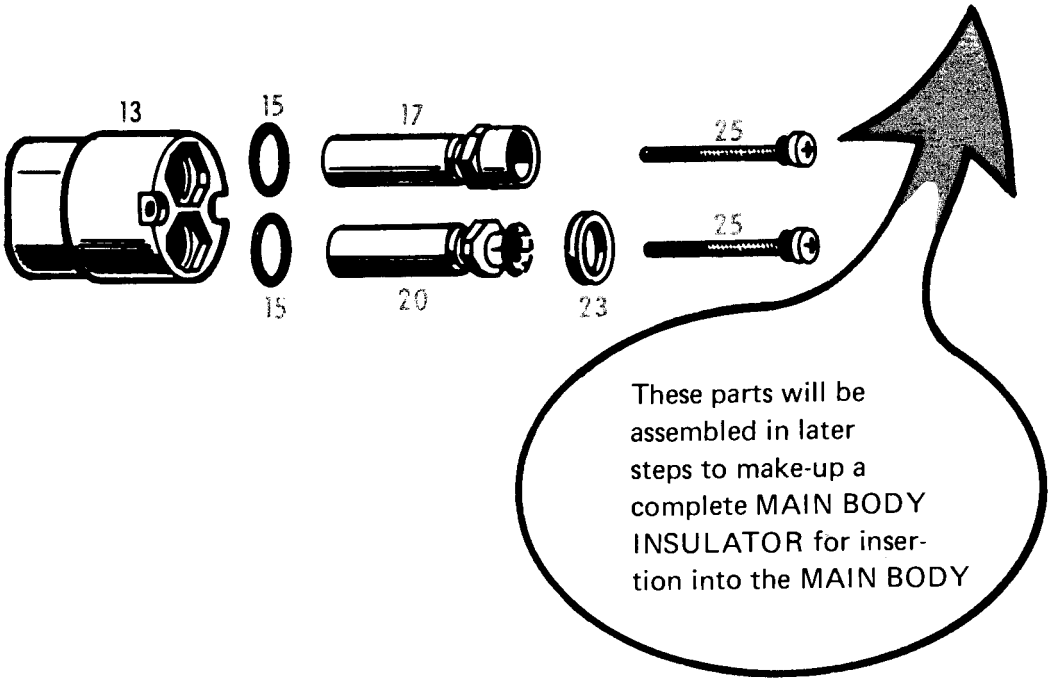

## STEP 3

Place the proper ID tag (locally procured) over the end of the cable and

NOTE: Place a short piece of shrinkable tubing over end and treat in order to protect boot from burrs on the support braid.

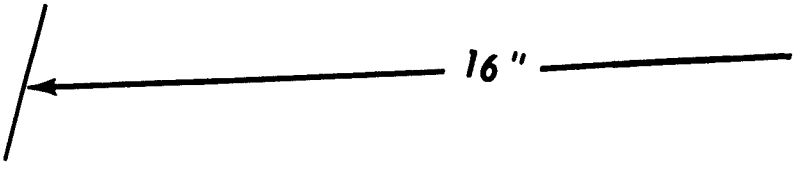


Place the 10 items onto the cable in the order and positions shown below,

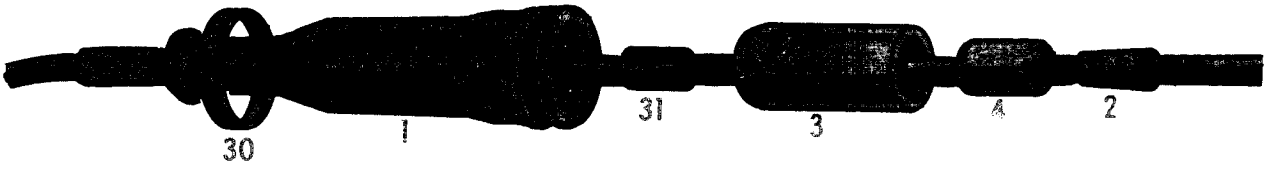


and

after making sure every part is installed in the order and position shown, PUSH all the parts back, flush to the ID tag. This will give you room to work on the cut end as shown in the following steps.

install it back at least 16 inches.

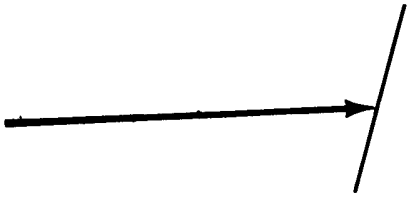

NOTE

The ID tag is in addition to the original tag on the cable. The ID tag should include:

NOMENCLATURE

LENGTH

YEAR and MONTH

type of action-

OVH for OVERHAUL (repair of CX-1120/G) by replacing CONNECTOR UG-1870/U

or

FAB for FABRICATION (making 100 foot lengths from 1/4 mile lengths)

or

SCR for SCREENED (SCREENING by a designated activity)

UNIT IDENTIFICATION (who did the OVH or FAB or SCR).

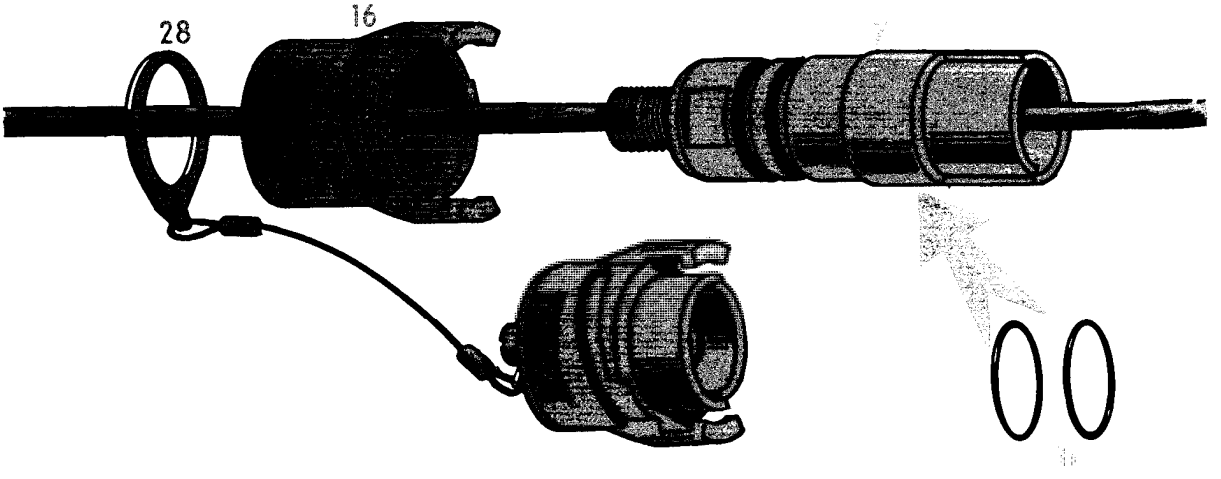

## STEP 5

Prepare the cable by trimming the outer jacket to 5 1/8 inches from the cut end.

CAUTION: Be careful not to nick or cut the OUTER SUPPORT BRAID.

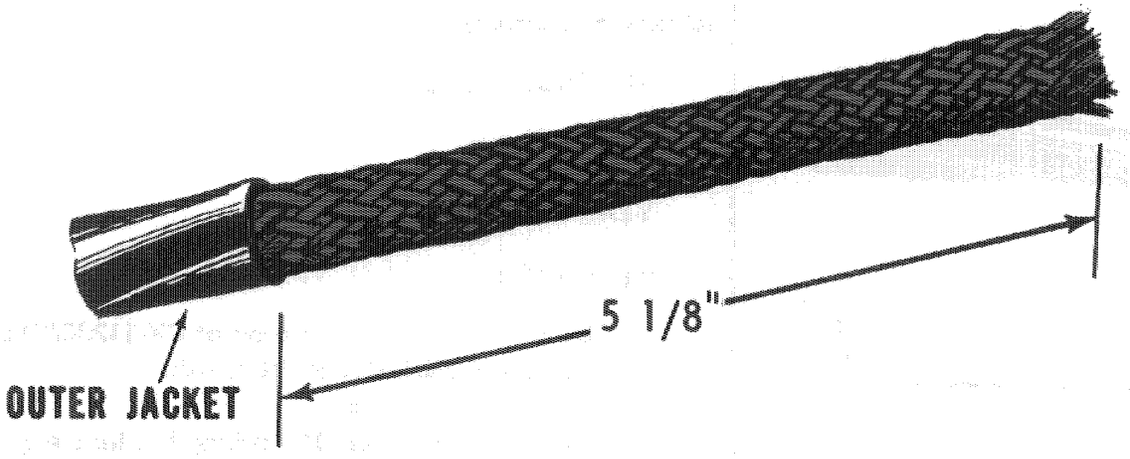


## STEP 6

Trim the outer support braid and mylar tape to 1 9/16 inches from the outer jacket.

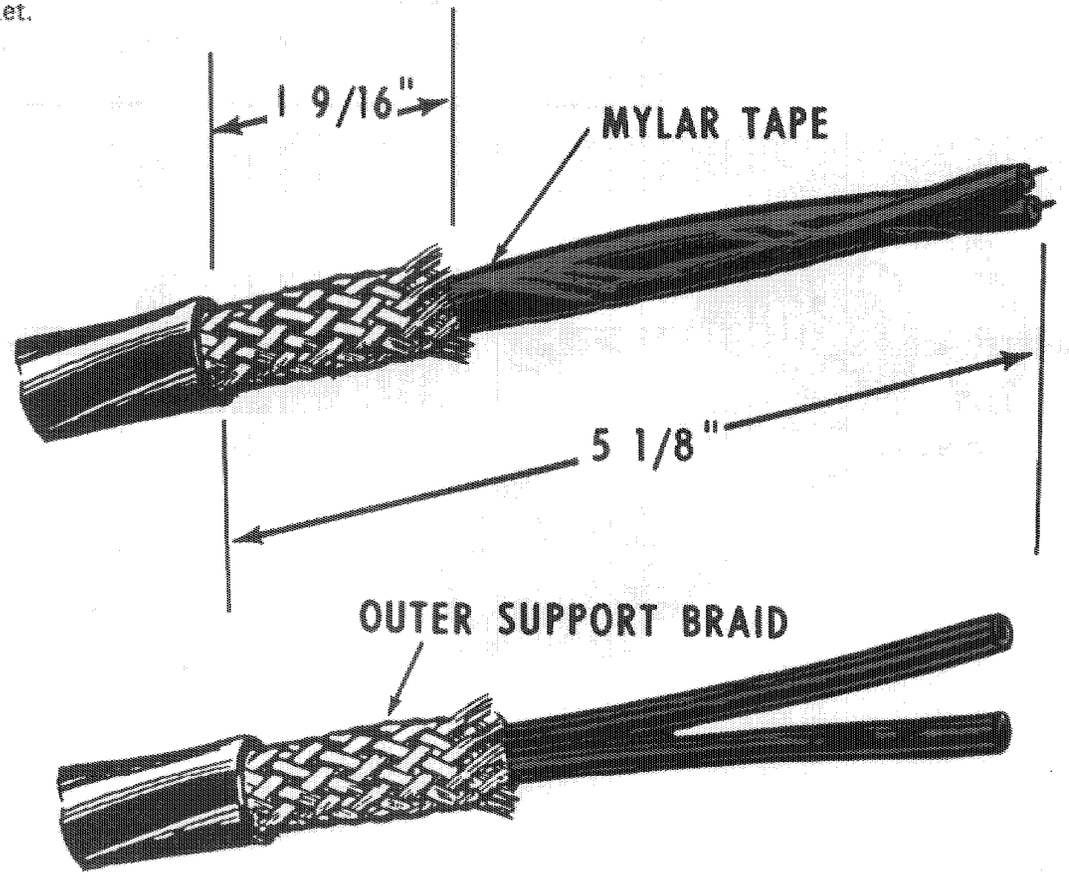

## STEP 7

Slide the SUPPORT BRAID CONE (5) over both coaxial cables and then OVER the mylar tape and push it UNDER the outer support braid. Use masking tape to hold the SUPPORT BRAID CONE (5) in place.

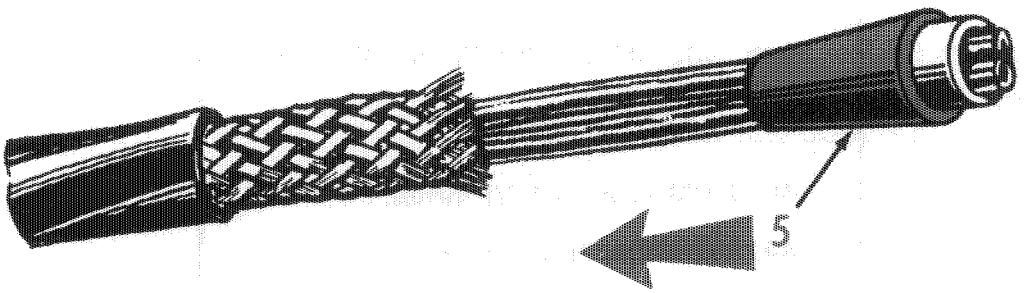


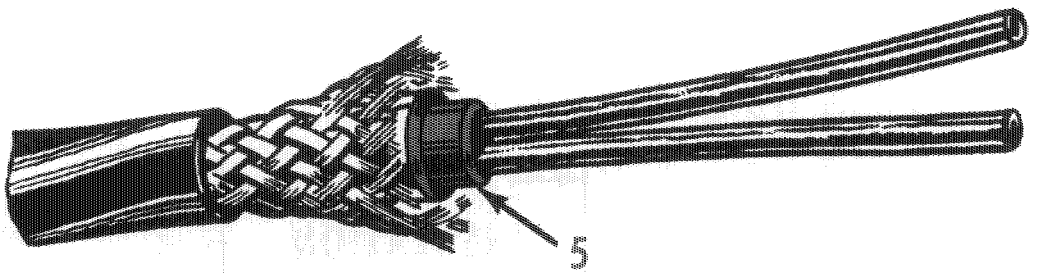


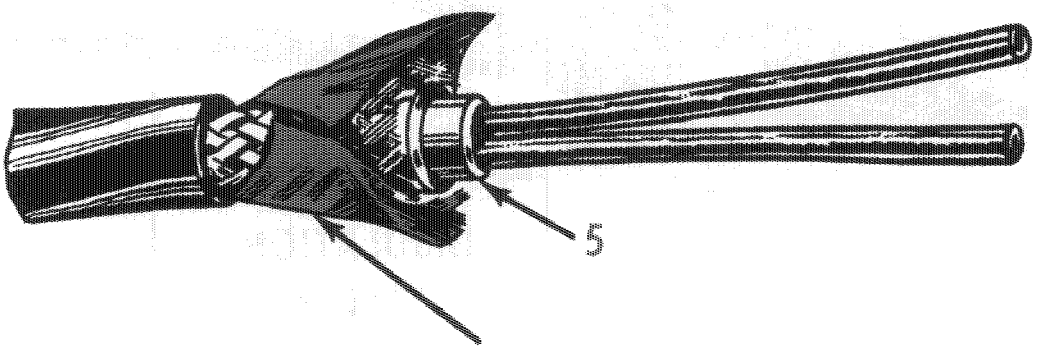

**STEP 10.**

Slip one INSULATION SLEEVE (29) over each coaxial cable.

NOTE

Both INSULATION SLEEVES (29) should be the EXACT SAME LENGTH.

MINIMUM length is 1 7/8 inches.

MAXIMUM length is 2 inches.

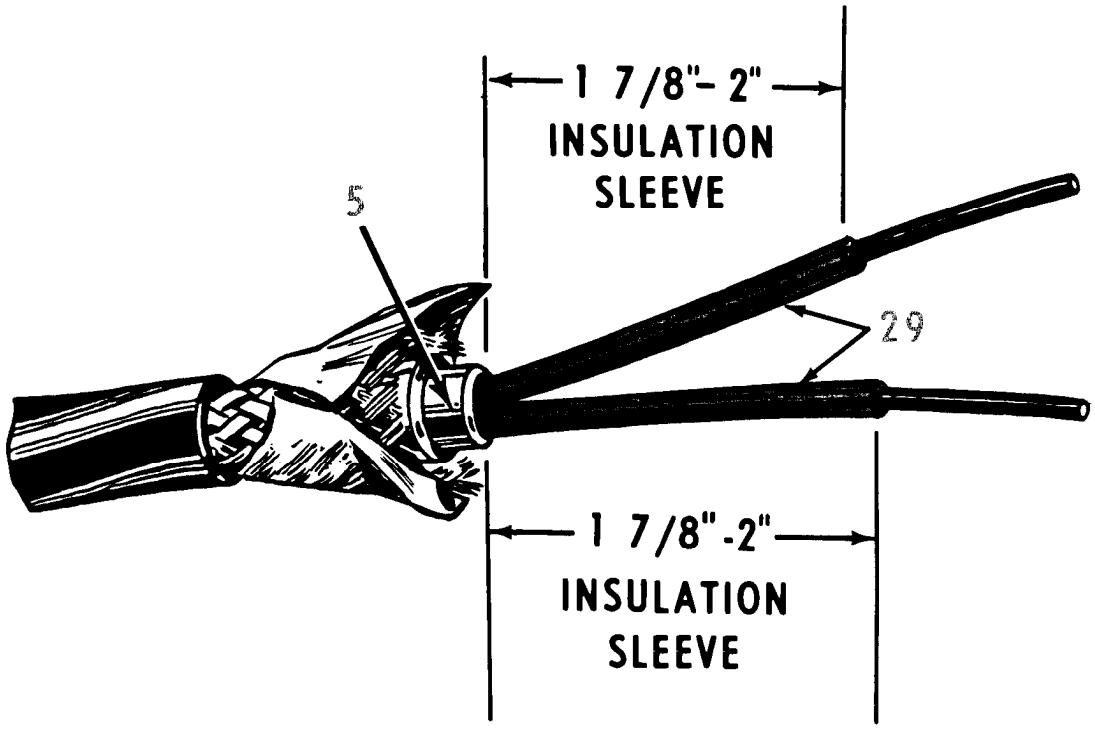

Slip one PREASSEMBLED CLAMP NUT (8) with its HEX NUT (27) over each coaxial cable until it is flush with the INSULATION SLEEVE (29).

CAUTION: Make sure the PREASSEMBLED CLAMP NUT (8) is facing as shown below.

CAUTION: Make sure that the HEX NUT (27) is threaded 9/32 of an inch from the end of the PREASSEMBLED CLAMP NUT (8).

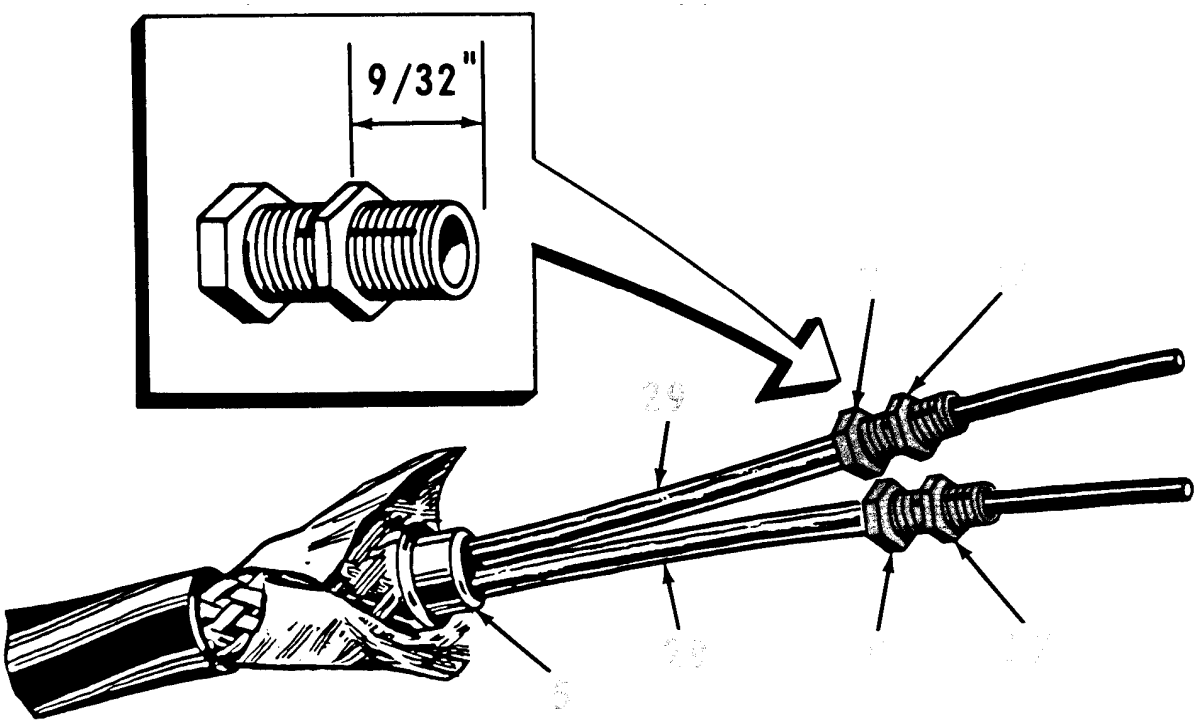


Trim the outer jacket of each coaxial cable flush to the PREASSEMBLED CLAMP NUT (8).

CAUTION: **Do not nick or cut the coaxial cable braid.**

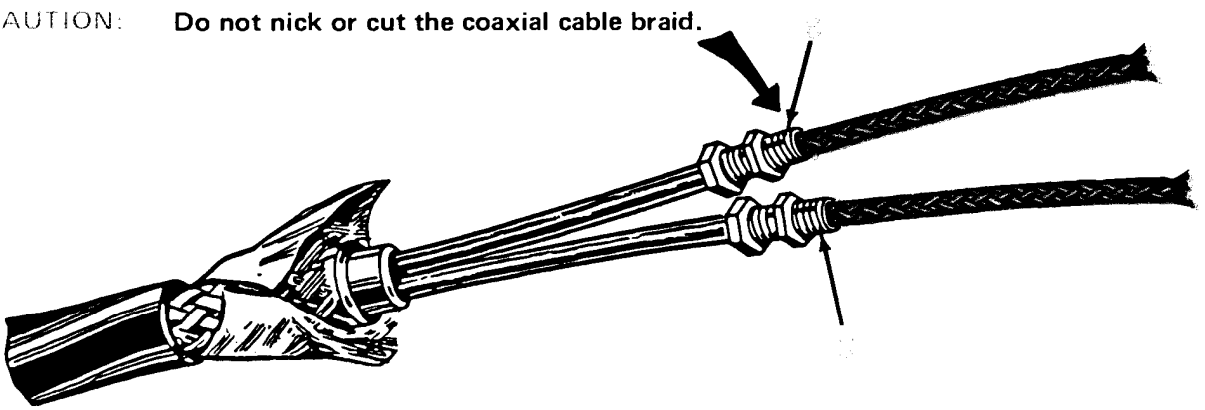

Slip one CLAMP BUSHING (9) over each coaxial cable. Push it flush against the PRE-ASSEMBLED CLAMP NUT (8).

CAUTION: Make sure the small opening of the CLAMP BUSHING (9) is against the PREASSEMBLED CLAMP NUT (8).

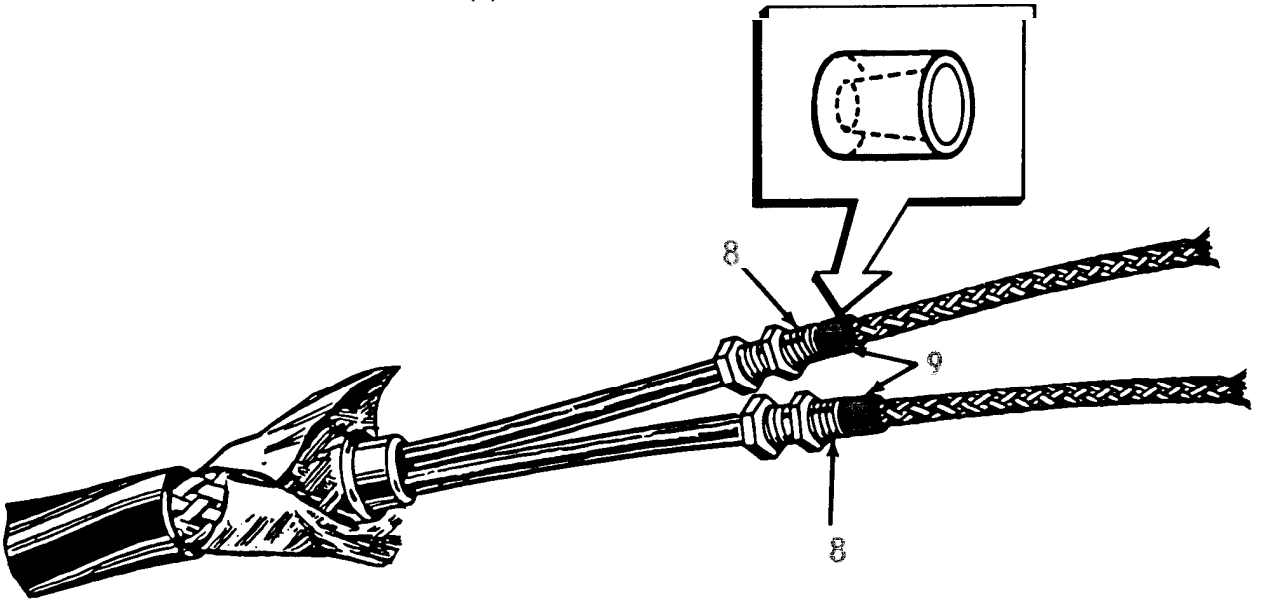


Comb back the braid on each coaxial cable using the small wire brush.

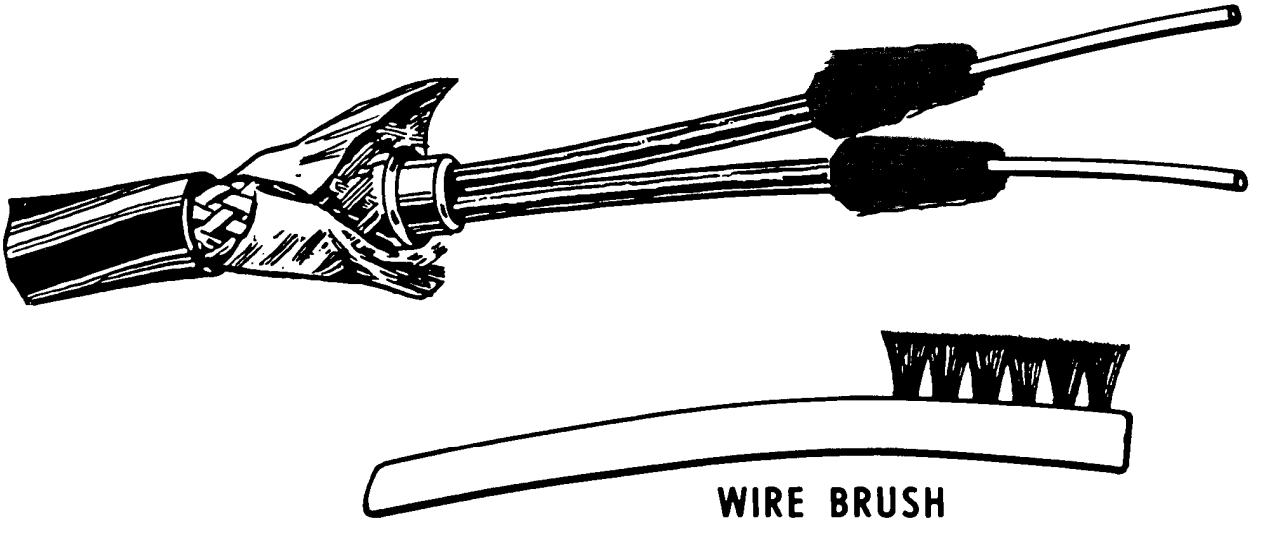

Slip one FERRULE (10) onto each coaxial cable down to and then under the combed braid. Gently apply pressure to force the FERRULE (10) flush into the CLAMP BUSHING (9).

CAUTION: Make sure the FERRULE (10) is inserted with the conical end first.

CAUTION: If a properly inserted FERRULE (10) cannot be seated firmly into the CLAMP BUSHING (9), it indicates that the CLAMP BUSHING (9) was inserted backwards.

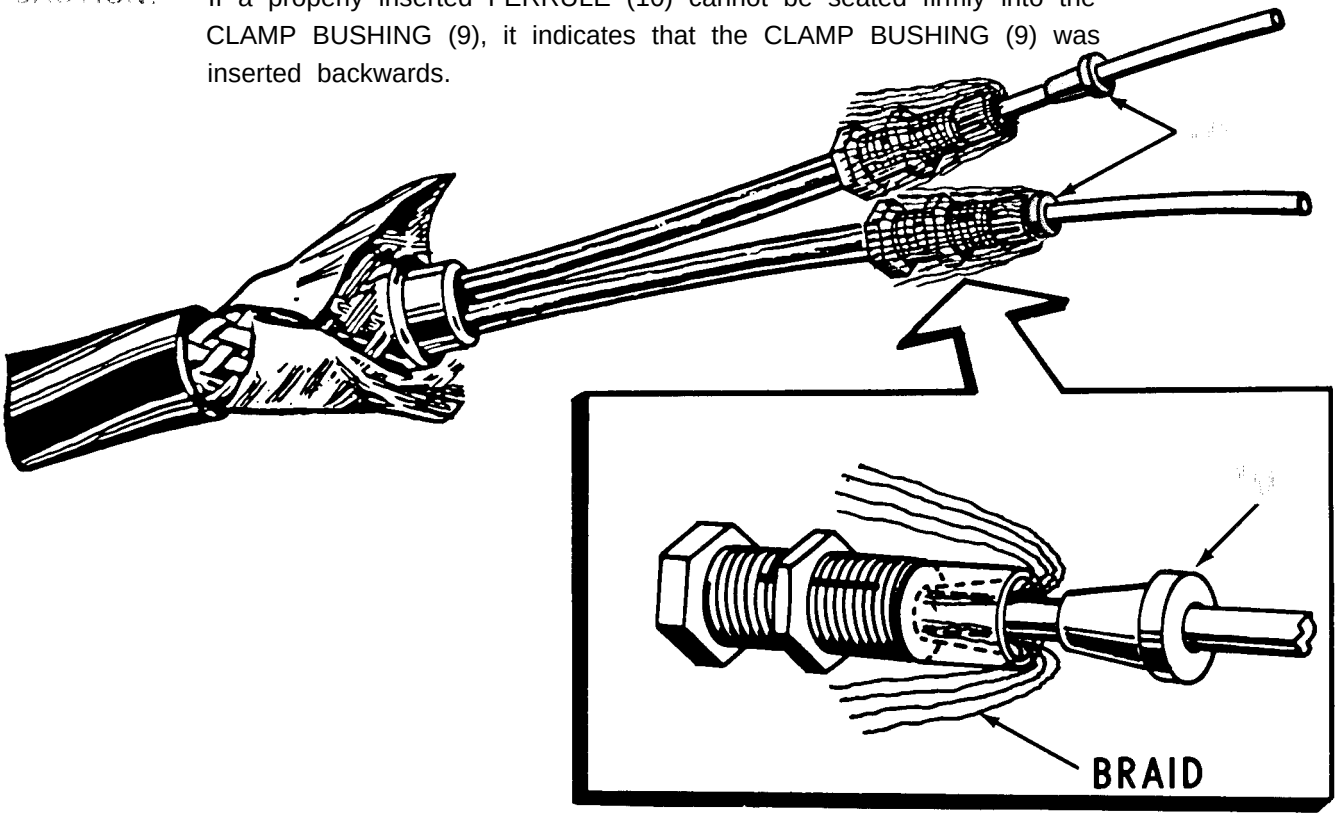


Trim the braid on each coaxial cable flush against the JOINT of the CLAMP BUSHING (9) and the FERRULE (10). Carefully examine this trimming to make sure that not even one strand of braid is left outside the JOINT.

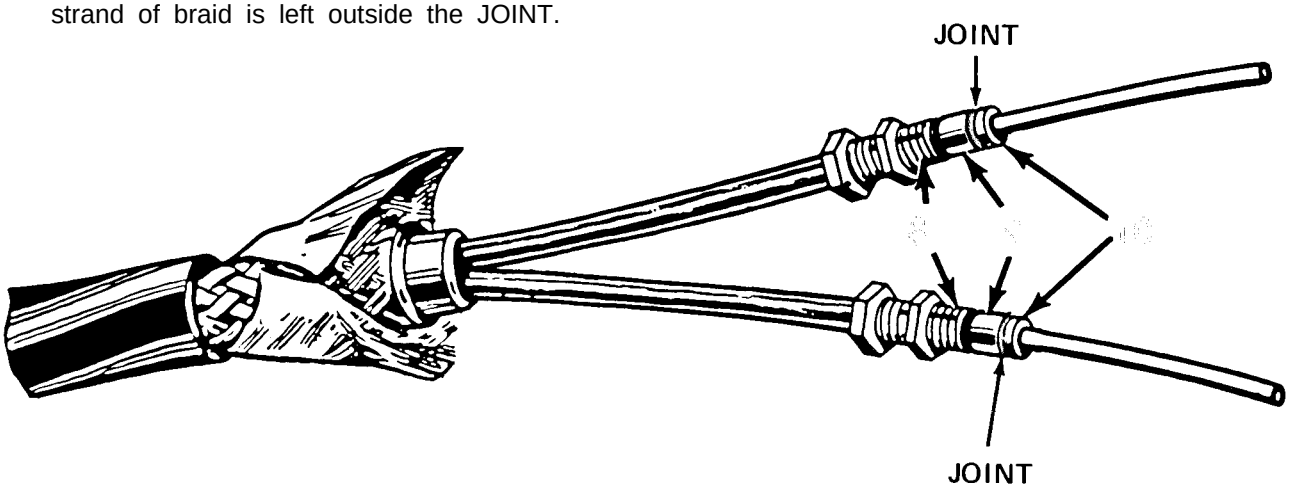

## STEP 15

Slip one REAR INSULATOR (12) over each coaxial cable until it is flush against the FERRULE (10).

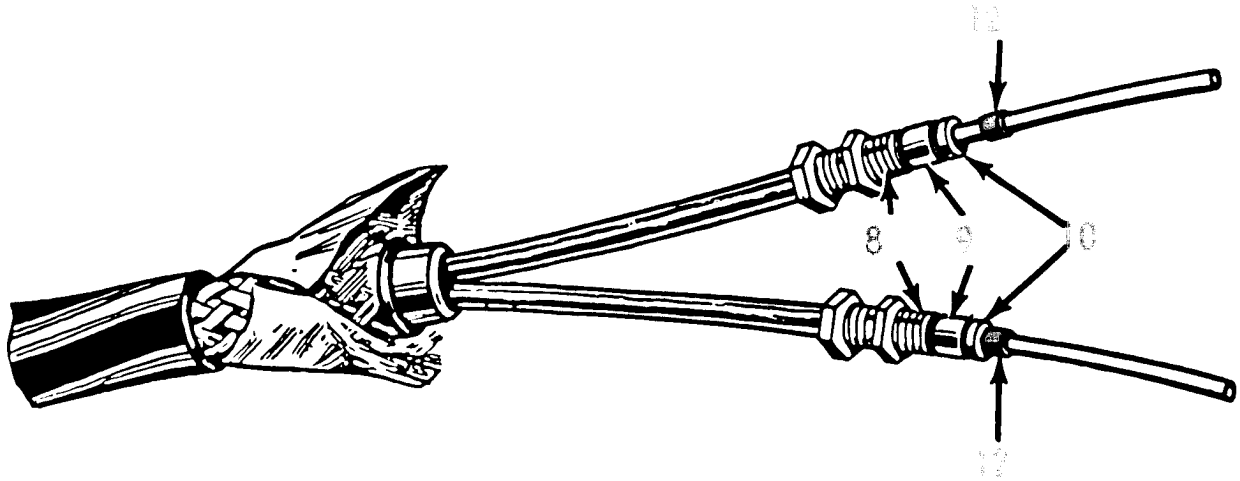


## STEP 16

Trim the dielectric of each coaxial cable flush to the REAR INSULATOR (12).

CAUTION: Do not nick or cut the strands of wire making up the center conductor for each coaxial cable.

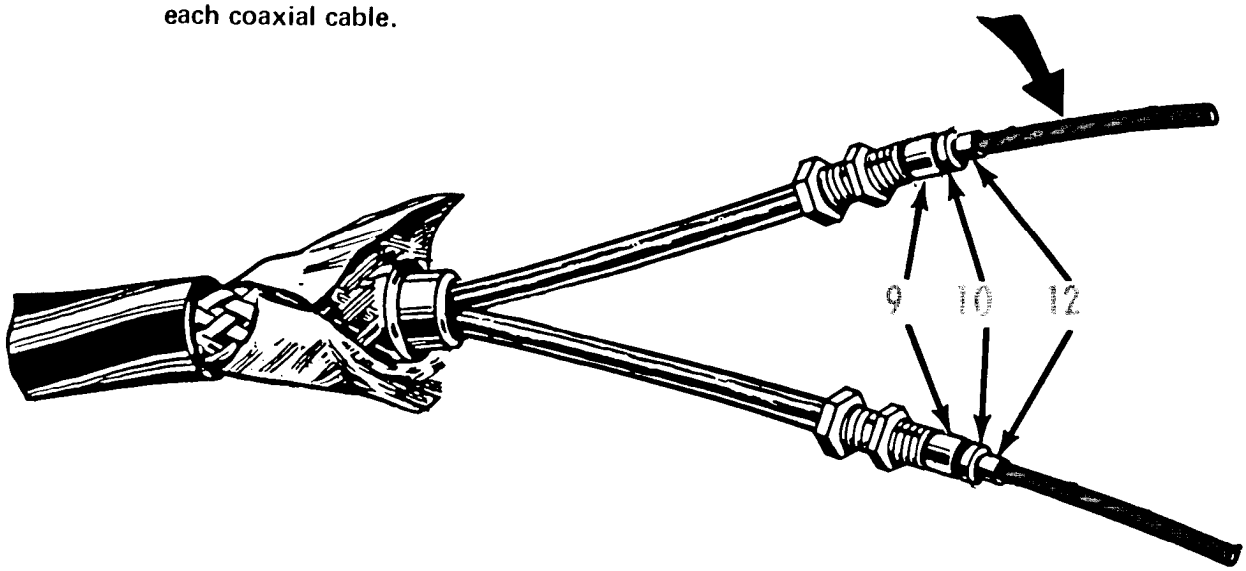

Tin the center conductor of each coaxial cable

and

after cooling, trim to 7/16 of an inch.

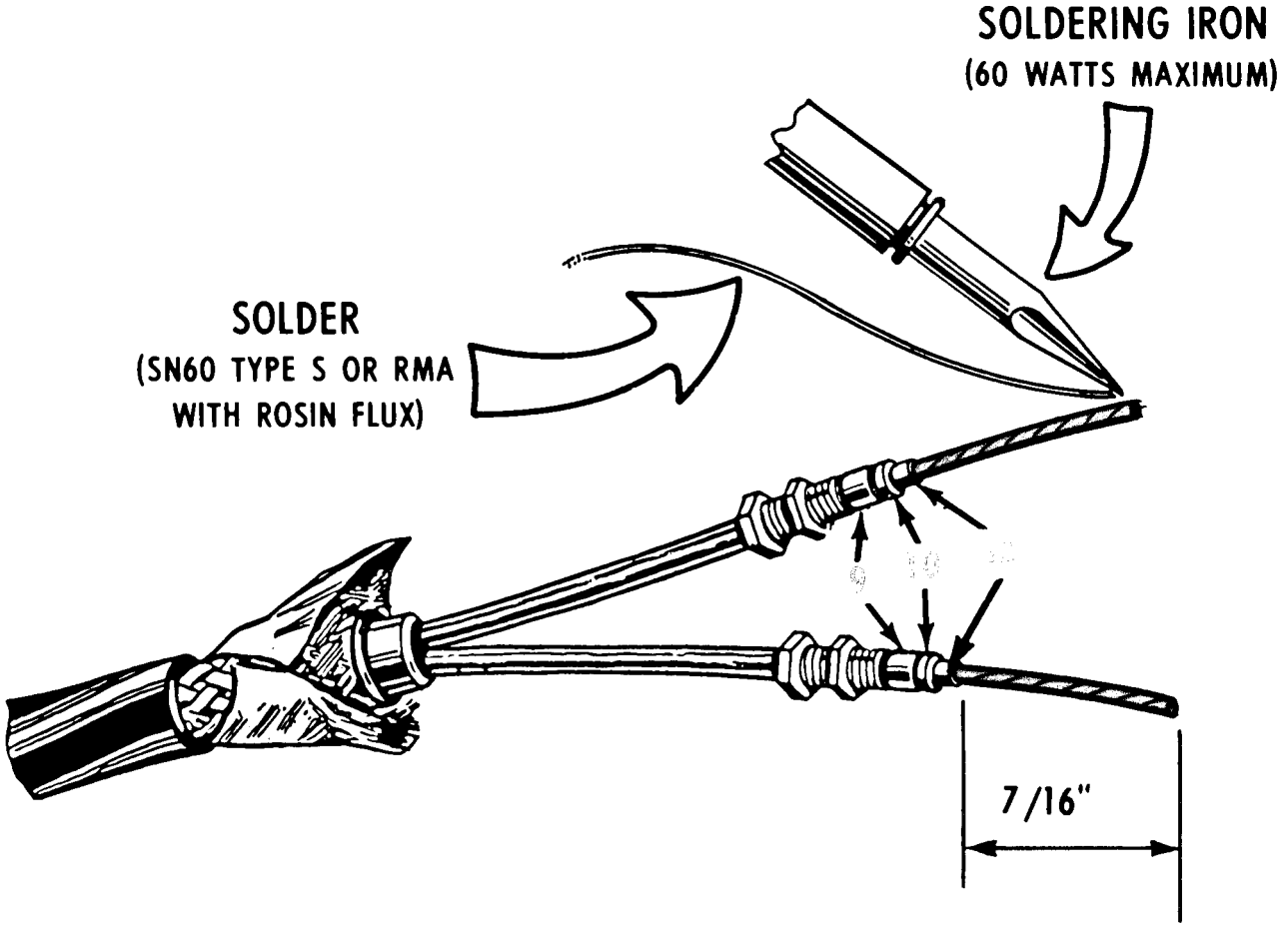

**Identify the coaxial cables. Use an ohmmeter to identify both ends of a coaxial cable.**

> **NOTE**
> **You are now preparing to install the MALE CONTACT and the FEMALE CONTACT. In order for the TWIN COAX CABLE (CX-11230/G) to work properly, one coaxial cable must have a FEMALE CONTACT at one end and a MALE CONTACT on the other end. The other coaxial cable must have the opposite arrangement of contacts.**

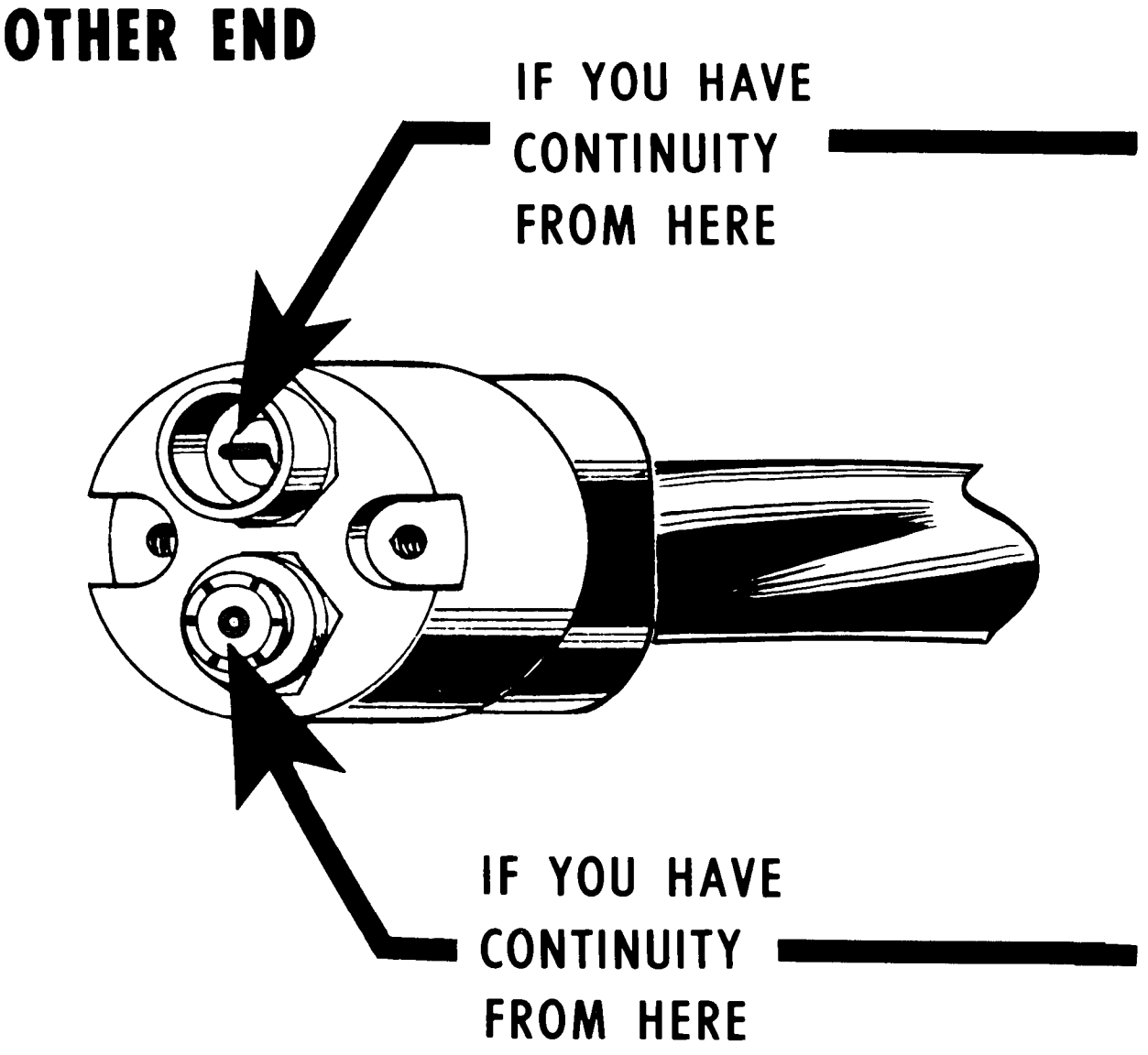

Mark one cable end at the WORKING END with a small piece of masking tape.
(The example shown marks the WORKING END with an "F" for FEMALE CONTACT).

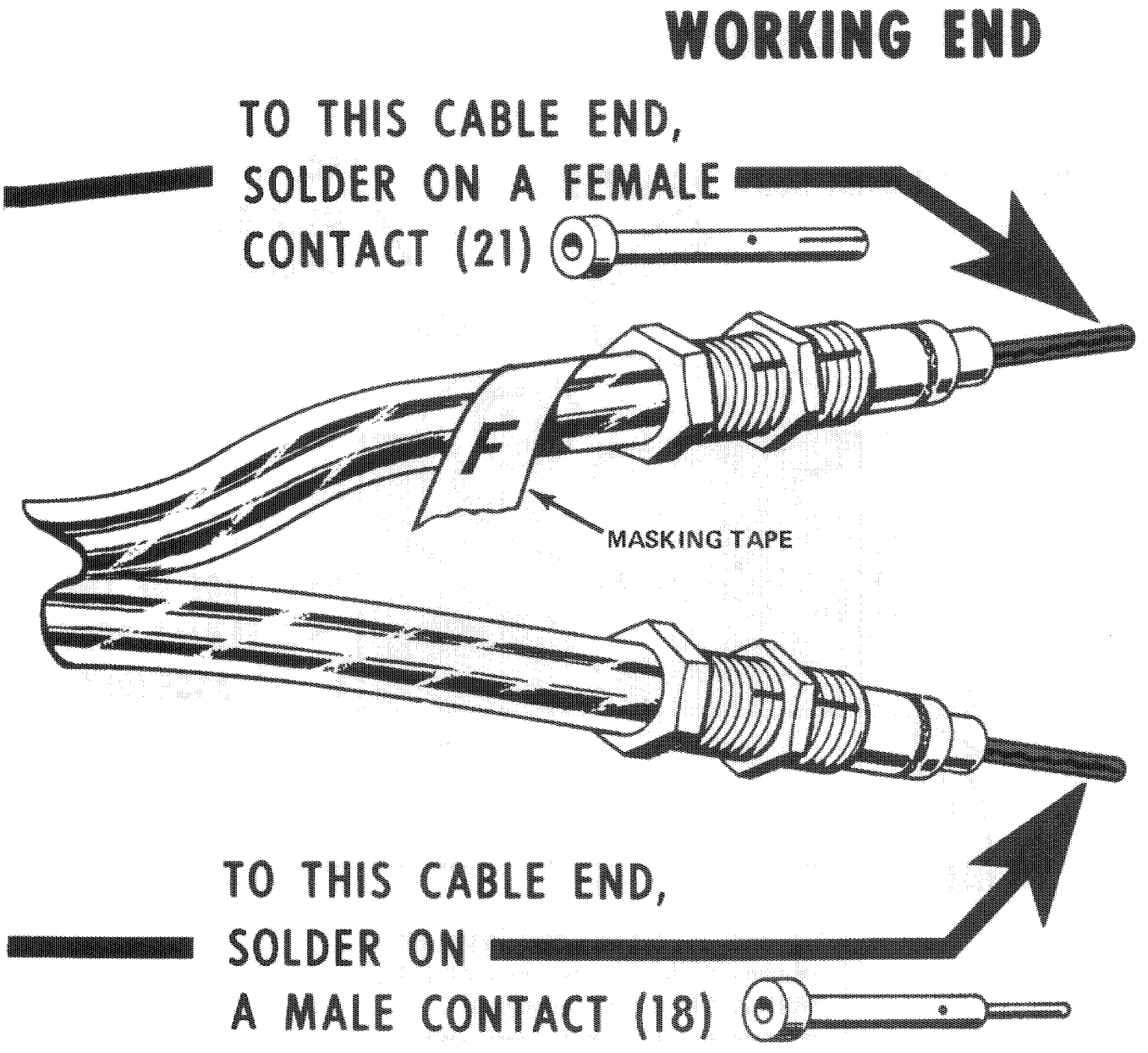

Set up a work jig as shown.

> NOTE
>
> Use a discarded MAIN BODY INSULATOR (13). When it is firmly held by the vise, you will be able to insert the contacts into the insulator and hold them in a good working position for soldering.

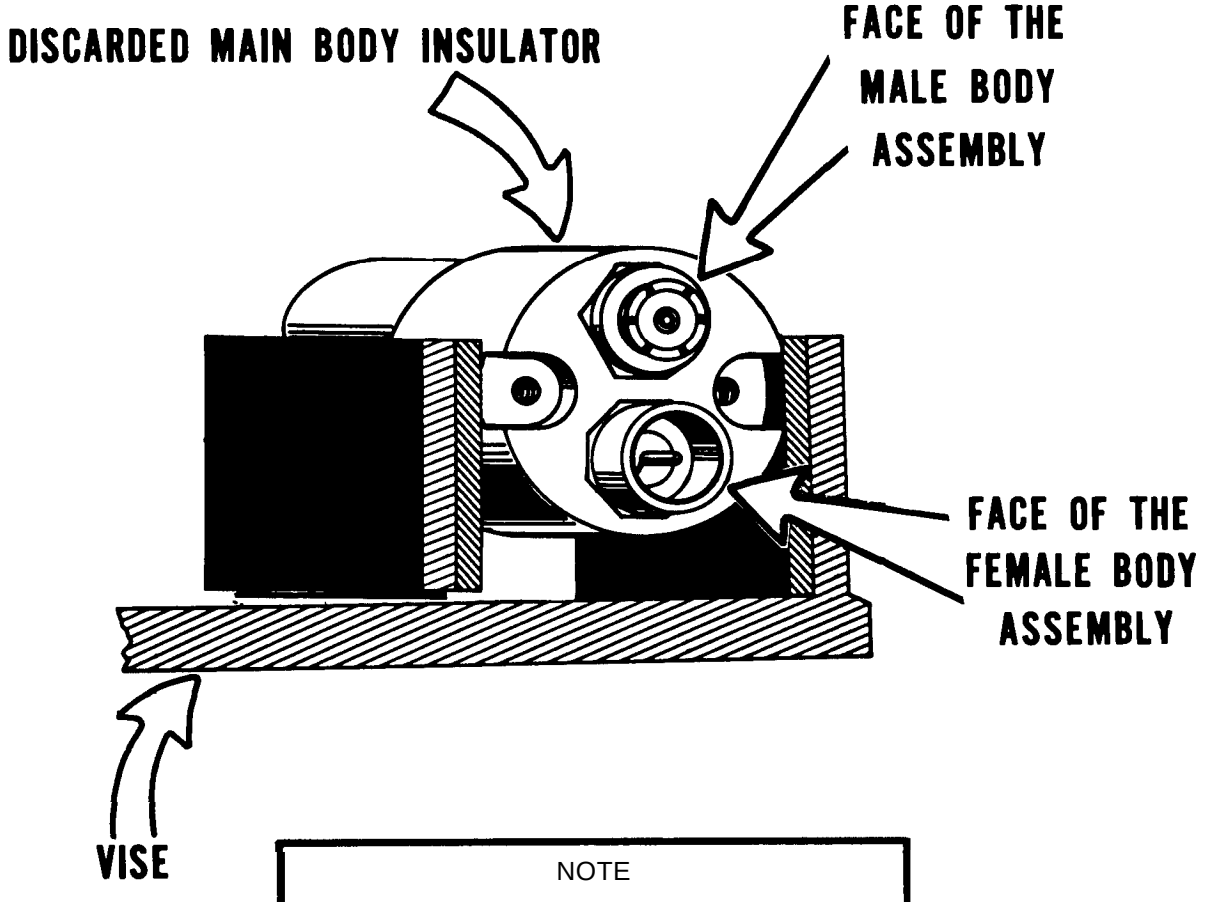


> NOTE
>
> The discarded MAIN BODY INSULATOR is only an aid. You will use a new MAIN BODY INSULATOR in the later steps.

Insert a MALE CONTACT (18) into the male body assembly on the discarded MAIN BODY INSULATOR (13) mounted in the vise.

Insert a FEMALE CONTACT (21) into the female body assembly on the discarded MAIN BODY INSULATOR (13) mounted in the vise.

CAUTION: If the contacts (18 and 21) have their O'RINGS (24) already installed on them, carefully remove the O'RINGS (24) before doing any soldering.

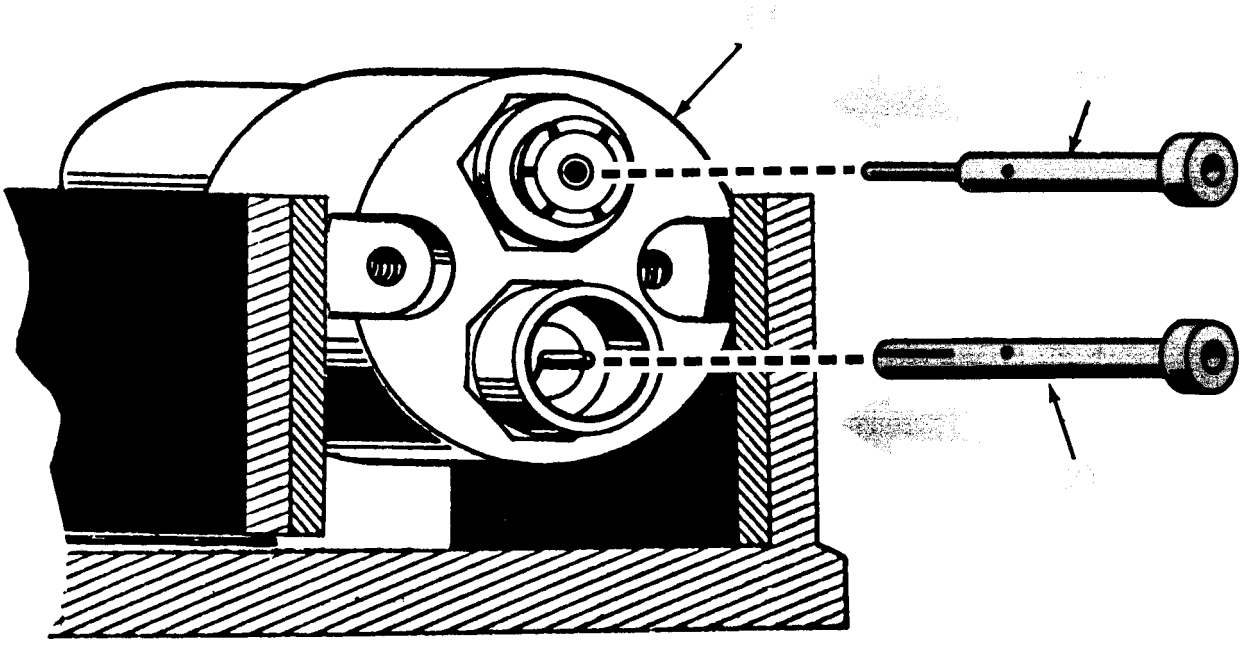

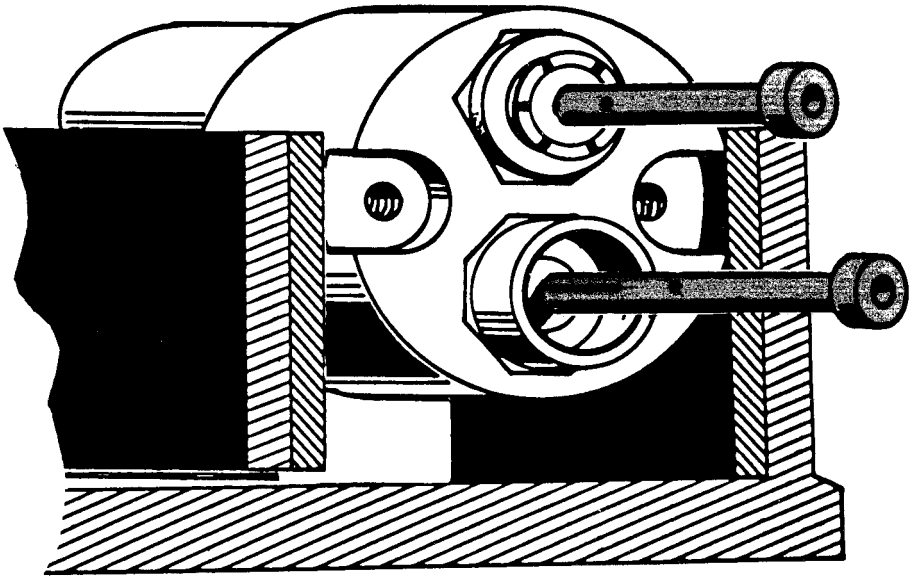

## STEP 21

Heat the FEMALE CONTACT (21) with your soldering iron and flow hot soLder into it.

CAUTION: Be careful not to overheat the FEMALE CONTACT (21).

Keep the FEMALE CONTACT (21) hot with your soldering iron and carefully insert the tinned center conductor of the proper coaxial cable (the one marked with the masking tape) into the rear of the heated FEMALE CONTACT (21).

Carefully push it in until the FEMALE CONTACT (21) is flush against the REAR INSU LATOR (12).

Lift off your soldering iron and let the work cool.

Repeat the above procedure with the MALE CONTACT (18) and the tinned center conductor of the other coaxial cable.

Remove the completed work from the jig and remove the masking tape.

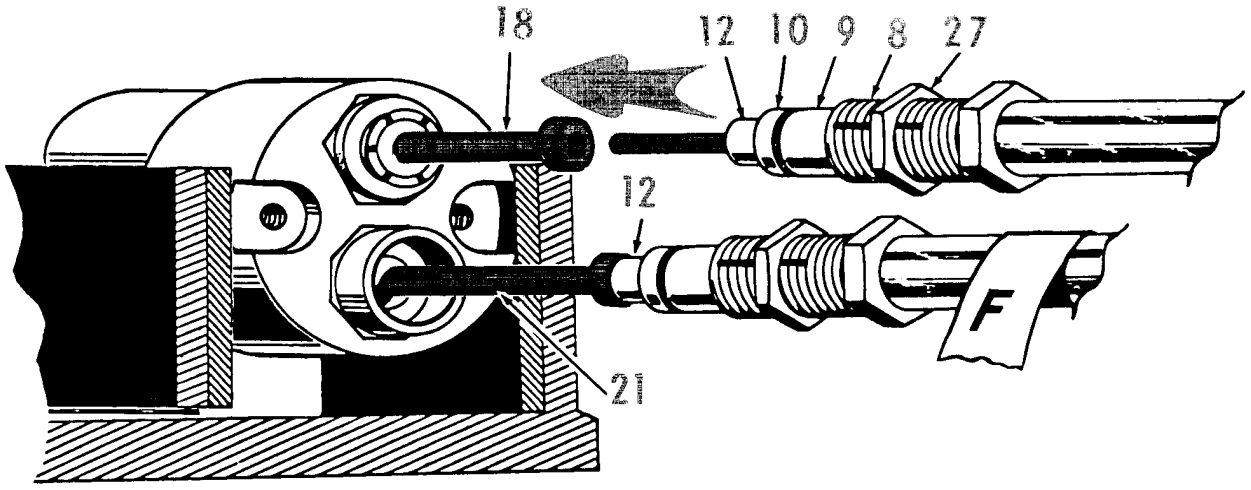

Place a prelubricated O'RING (24) over the MALE RECONTACT (18) and move it down until it is flush against the shoulder of the MALE CONTACT (18).

Do the same on the FEMALE CONTACT (21).

> NOTE
>
> Some parts packages may be received with the prelubricated O'RINGS (24) already installed over each contact. The O'RINGS should have been removed before soldering in previous steps. You may also find extra O'RINGS (24) in your parts package.

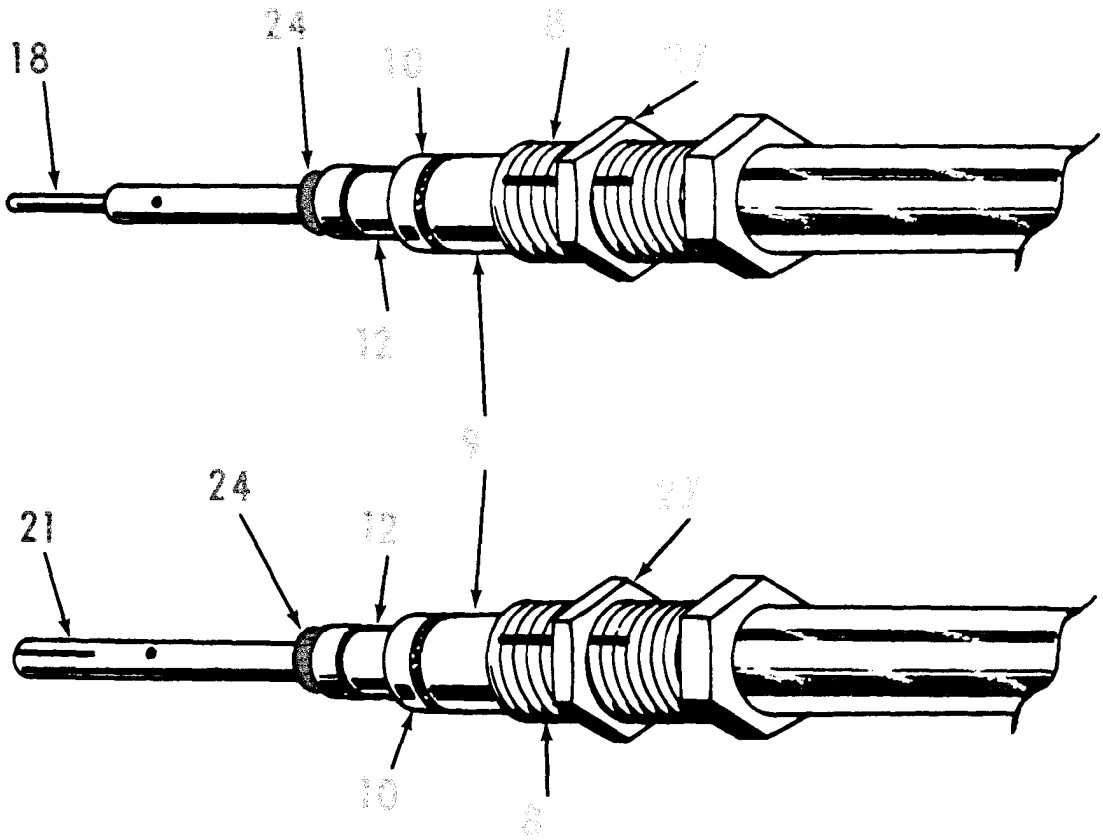

Insert the FEMALE BODY ASSEMBLY (17) (with its prelubricated O'RINGS (15) in place) into the new MAIN BODY INSULATOR (13).

Insert the MALE BODY ASSEMBLY (20) (with its prelubricated O'RING (15) in place) into the new MAIN BODY INSULATOR (13).

NOTE

The design of the holes in the MAIN BODY INSULATOR (13) will prevent installing a body assembly into the wrong hole.

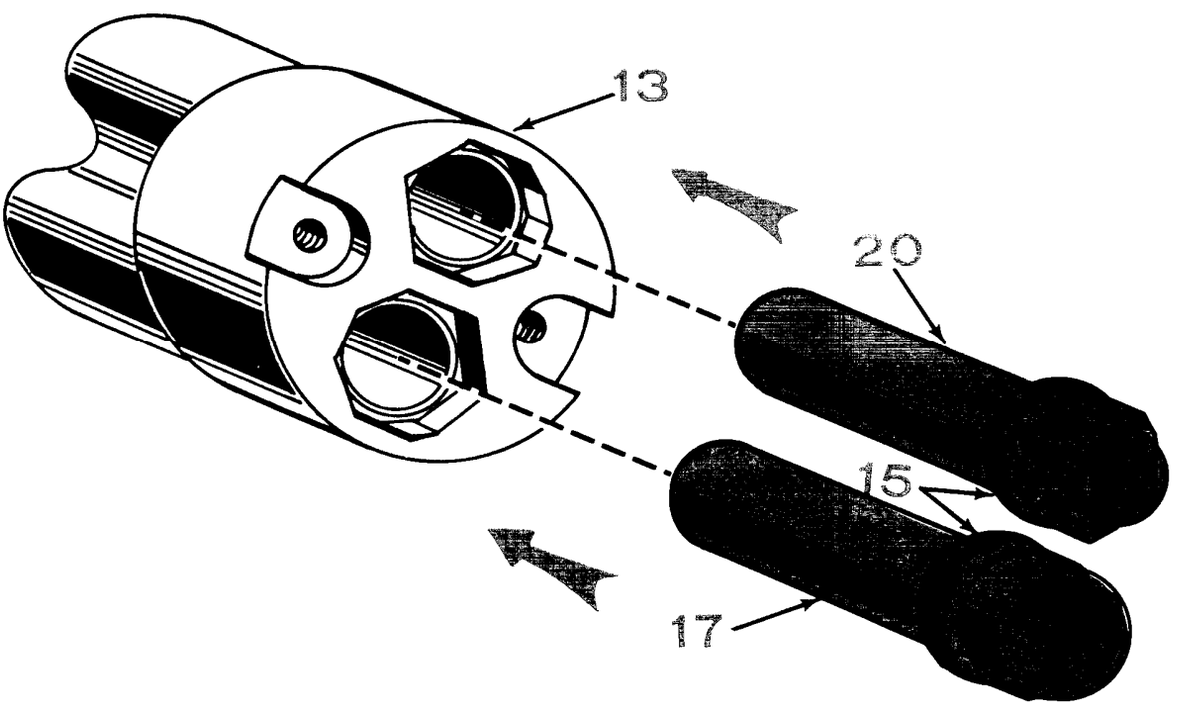

## STEP 24

Insert the FEMALE CONTACT (21) into the FRONT FEMALE INSULATOR (22) (with the prelubricated O'RING (14) in its groove).

> **NOTE**
>
> **The FRONT FEMALE INSULATOR (22) has a longer body than the FRONT MALE INSULATOR (19).**

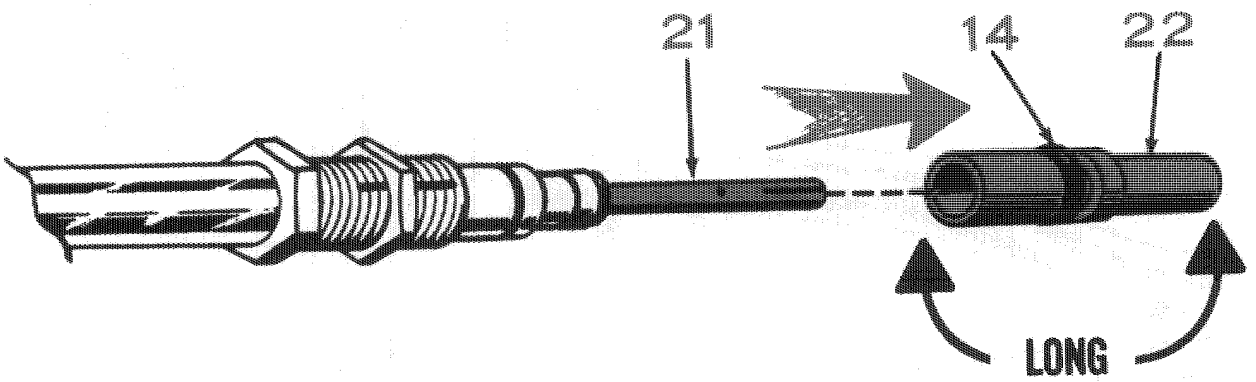


## STEP 25

Insert the MALE CONTACT (18) into the FRONT MALE INSULATOR (19) (with the prelubricated O'RING (14) in its groove).

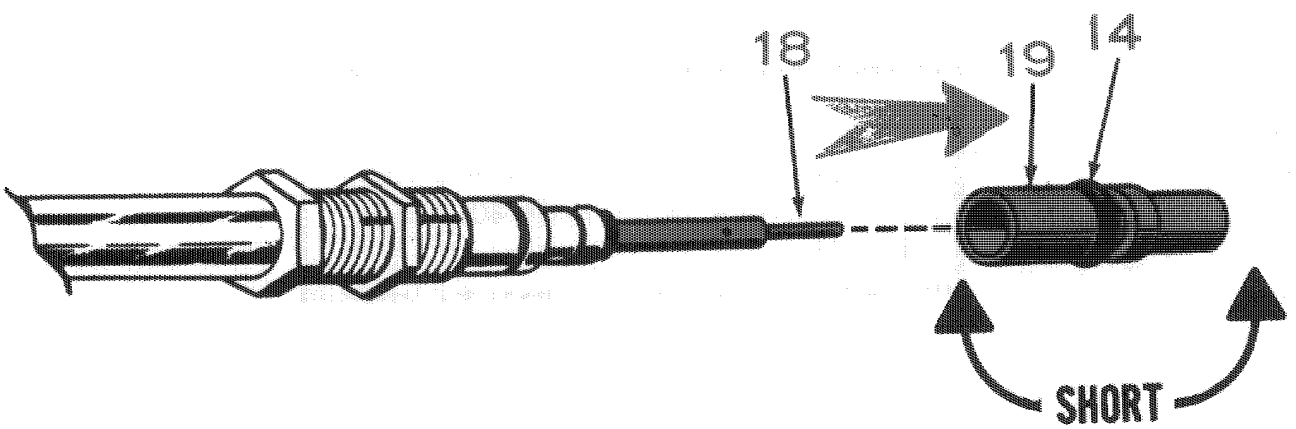

Slide a WASHER (26) over each PREASSEMBLED CLAMP NUT (8).

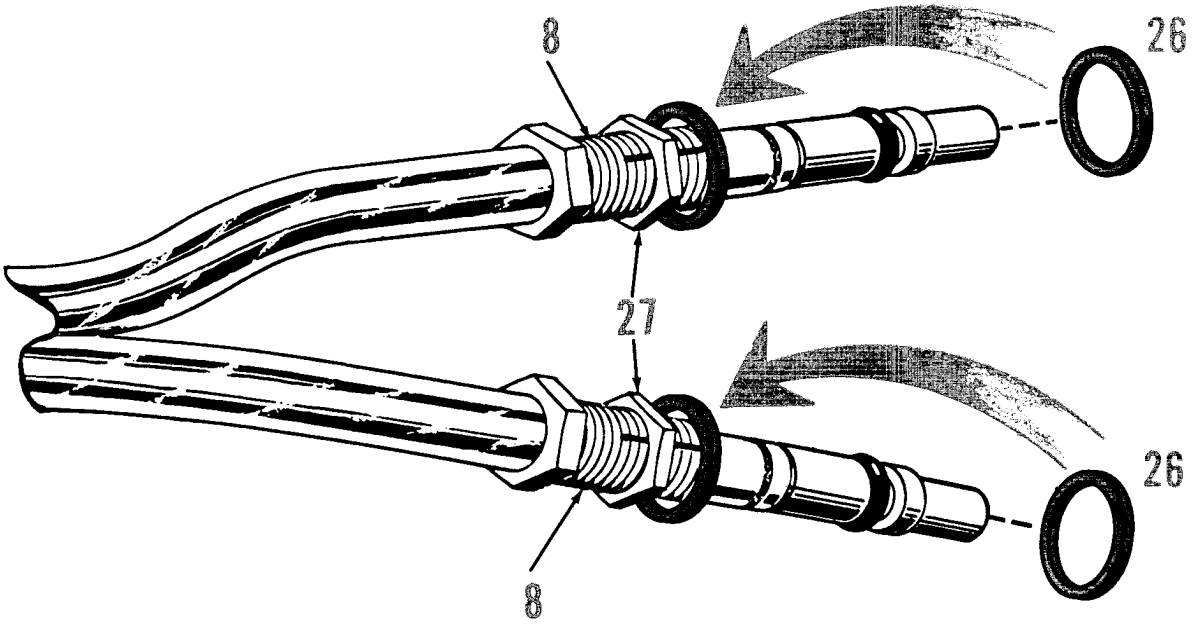


NOTE

You are now ready to install the two coaxial cable assemblies into the MAIN BODY INSULATOR.

## STEP 12

Screw in the coaxial cable male assembly (18, 19, 14, 10, 9, 26, 27 and 8) into the back of the female body assembly (17) on the MAIN BODY INSULATOR (13).

CAUTION: Make sure that the female body assembly (17) is properly seated in the MAIN BODY INSULATOR (13).

Torque the PREASSEMBLED CLAMP NUT (8) to 5 inch pounds and then torque the HEX NUT (27) to 5 inch pounds.

CAUTION: Always torque the PREASSEMBLED CLAMP NUT (8) first.

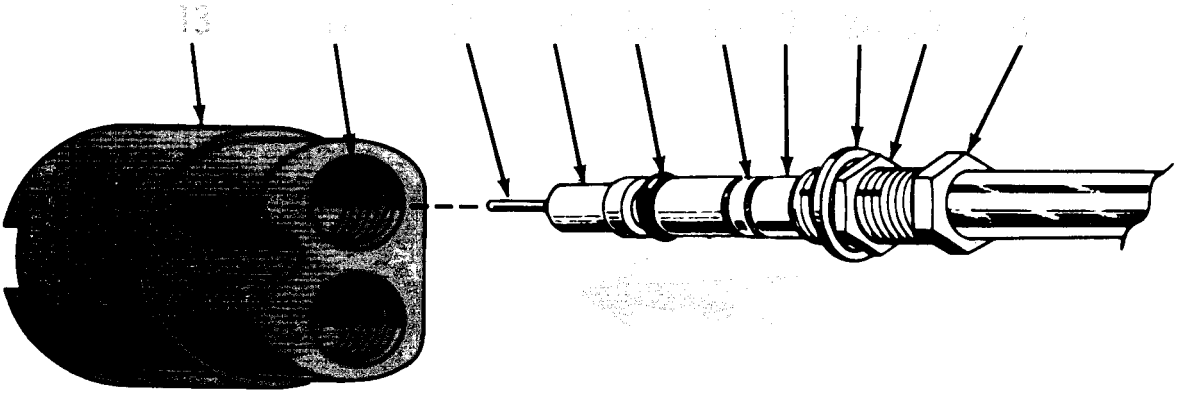


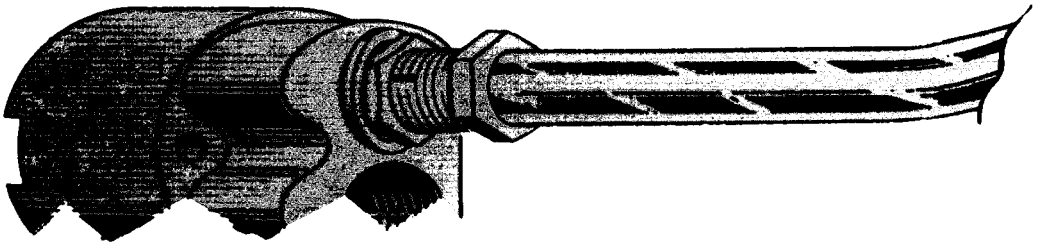

Screw in the coaxial cable female assembly (22, 14, 10, 9, 26, 27 and 8) into the back of the male body assembly (20) on the MAIN BODY INSULATOR (13).

CAUTION: Make sure that the male body assembly (20) is properly seated in the MAIN BODY INSULATOR (13).

Torque the PREASSEMBLED CLAMP NUT (8) to 5 inch pounds and then torque the HEX NUT (27) to 5 inch pounds.

CAUTION: Always torque the PREASSEMBLED CLAMP NUT (8) first.

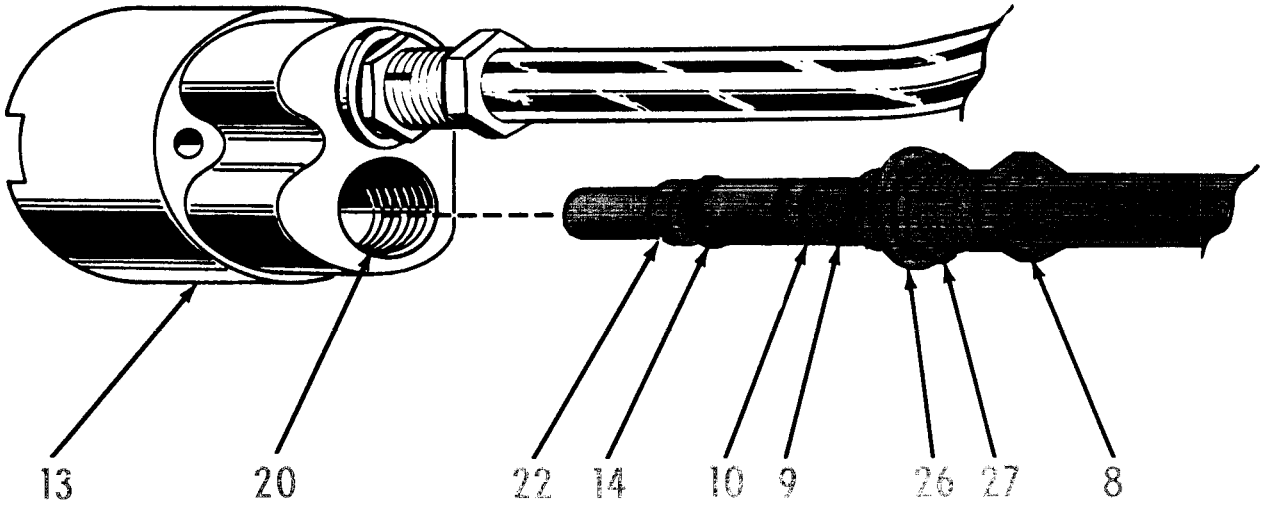

Examine the MAIN BODY (7) and make sure that the O'RINGS (11) are in place.

Slide down the MAIN BODY (7) to receive the MAIN BODY INSULATOR (13).

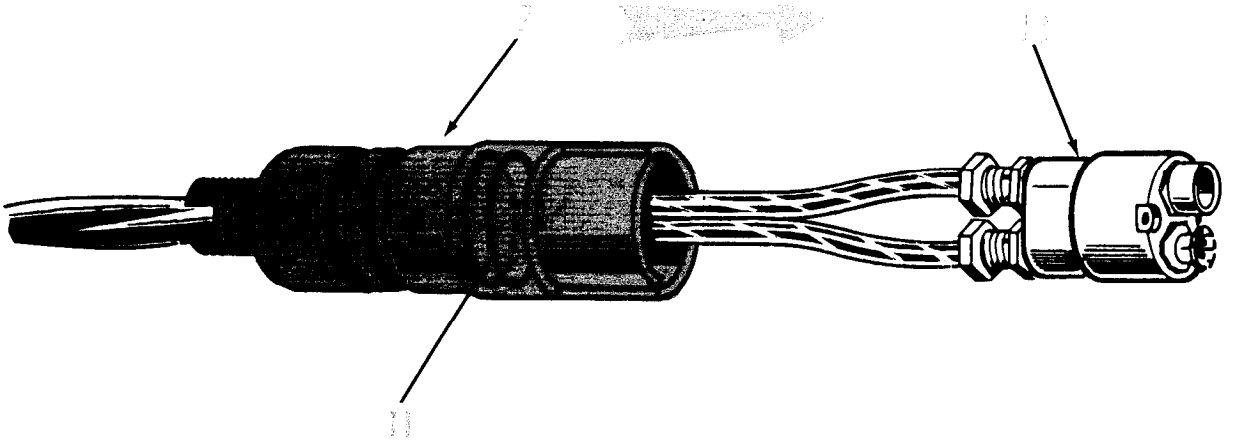

Insert the SPLIT WASHER (6) onto the cable between the SUPPORT BRAID CONE (5) and the MAIN BODY (7).

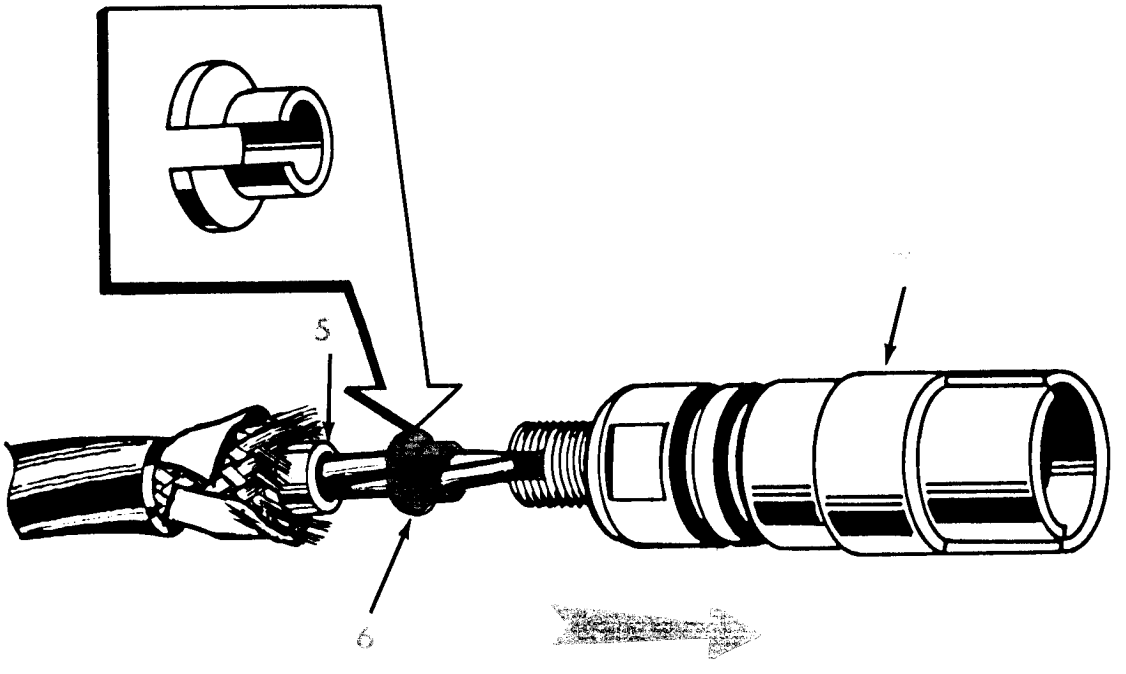

## STEP 31

Remove the masking tape over the support braid and trim the support braid flush to the edge of the shoulder on the SUPPORT BRAID CONE (5).

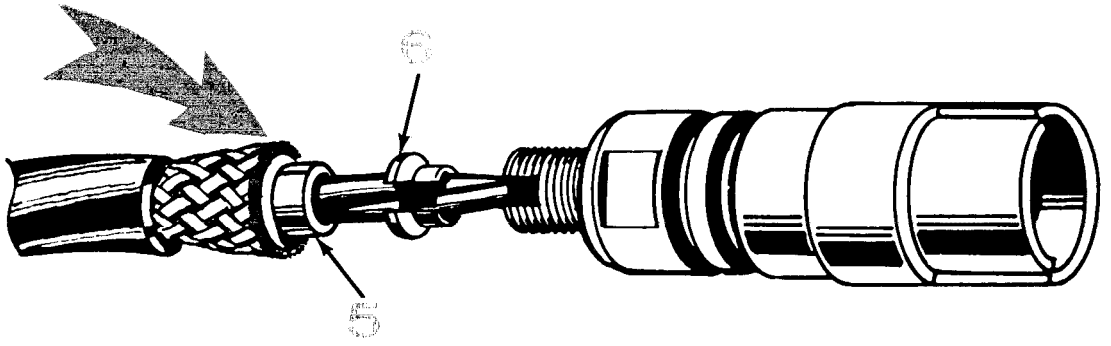


Place the MAIN BODY (7) into a jig (see page 3-28.1 for instructions to prepare the jig).

Slide the SUPPORT BRAID COLLET (2) over the support braid and the SUPPORT BRAID CONE (5).

Make sure that the slot on the SPLIT WASHER (6) lines up with the slot in the MAIN BODY (7).

Slide the FRICTION BUSHING (4) over the SUPPORT BRAID COLLET (2), through the slot in the SPLIT WASHER (6), and into the slot in the MAIN BODY (7).

> NOTE
>
> This action will cause the MAIN BODY INSULATOR (13) to be pushed slightly forward in the MAIN BODY (7). This is normal.

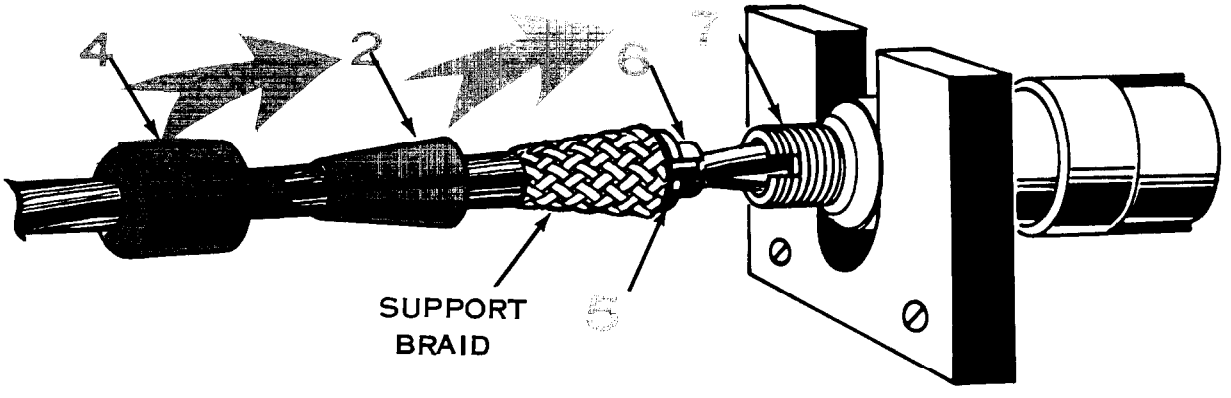

Jig should be fabricated from 1/2" thick aluminum or other material of sufficient strength to support the MAIN BODY (7).

Mount the jig to a work bench or in a vise to hold it in place.

Fabricate the jig to the dimensions shown in the illustration below.

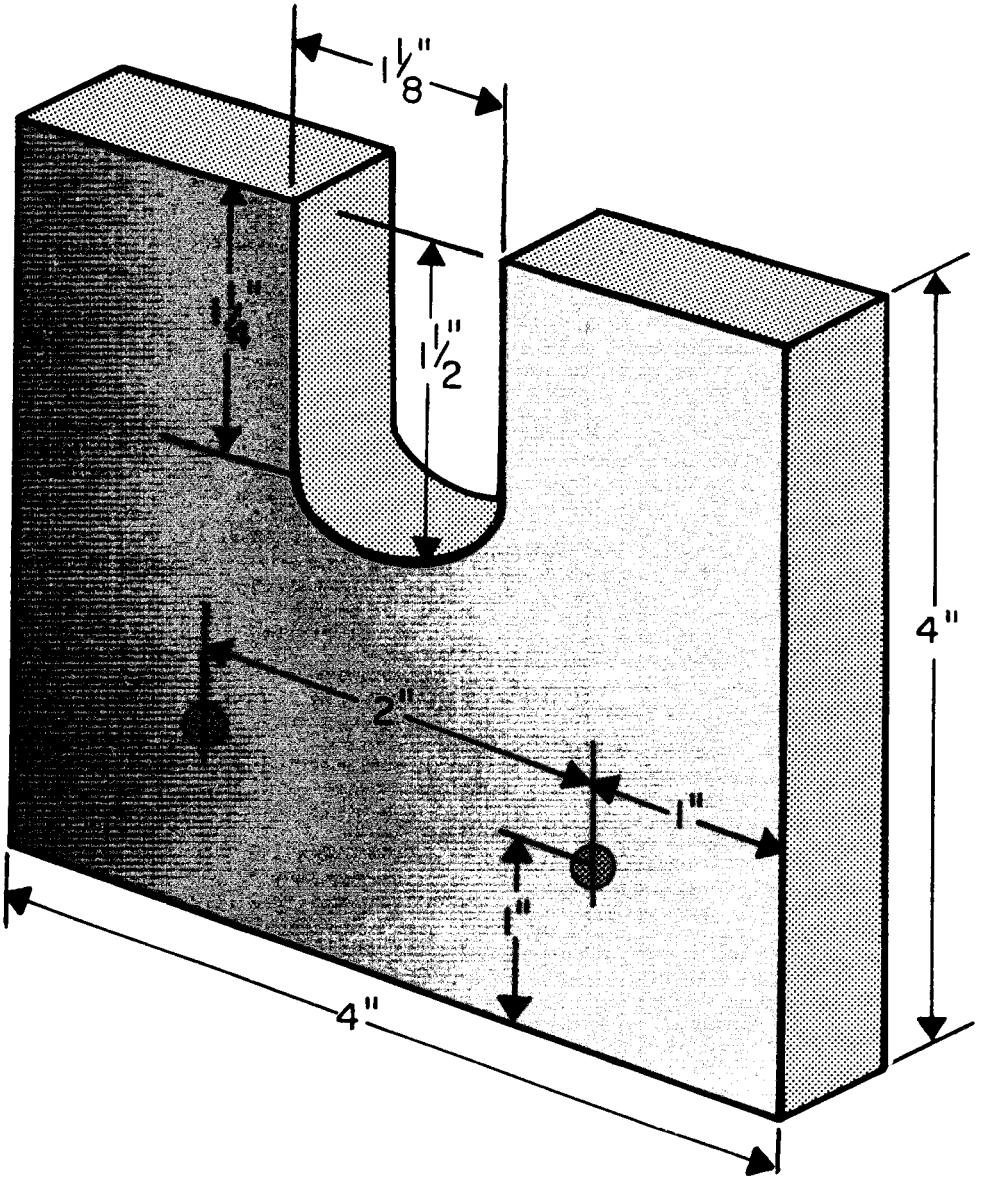


**NOTES**

1. Slot to hold MAIN BODY (7) should be at least 1-1/2" at the center point of curve.
2. Mounting holes should be drilled to 3/16".

Slide the CLAMP NUT (3) over the FRICTION BUSHING (4) and screw it handtight over the MAIN BODY (7).

Torque the CLAMP NUT (3) to 100 inch pounds.

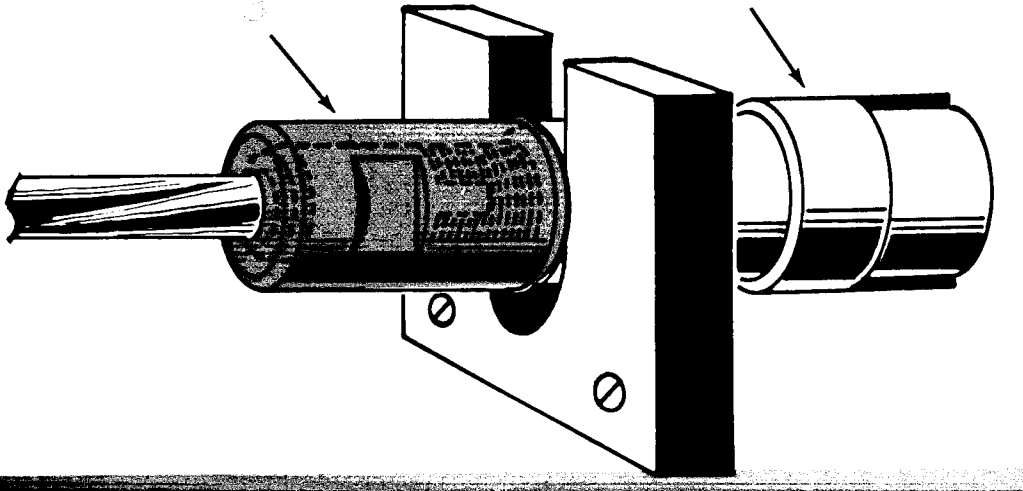

Complete the installation of the MAIN BODY INSULATOR (13) into the MAIN BODY (7).

Push the MAIN BODY INSULATOR (13) back and install the two SCREWS (25).

Tighten down the two SCREWS (25) to 5 inch pounds.

> NOTE
>
> Each SCREW (25) has a factory installed O'RING on it and when properly tightened, the MAIN BODY INSULATOR (13) is approximately ½ inch below the face of the MAIN BODY (7).

By hand, insert the NON-METALIC WASHER (23) over the MALE BODY ASSEMBLY (20).

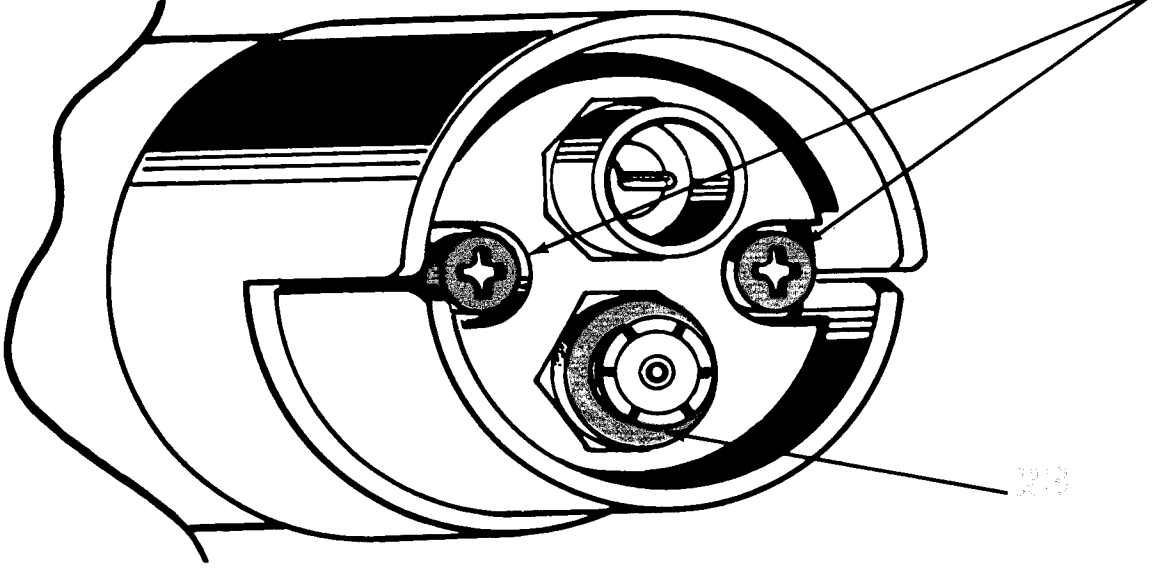

## STEP 35.

Slide down the COUPLING NUT (16) and CAP ASSEMBLY (28) over the MAIN BODY (7).

Screw the CAP of the CAP ASSEMBLY (28) over the end of the MAIN BODY (7) and onto the COUPLING NUT (16).

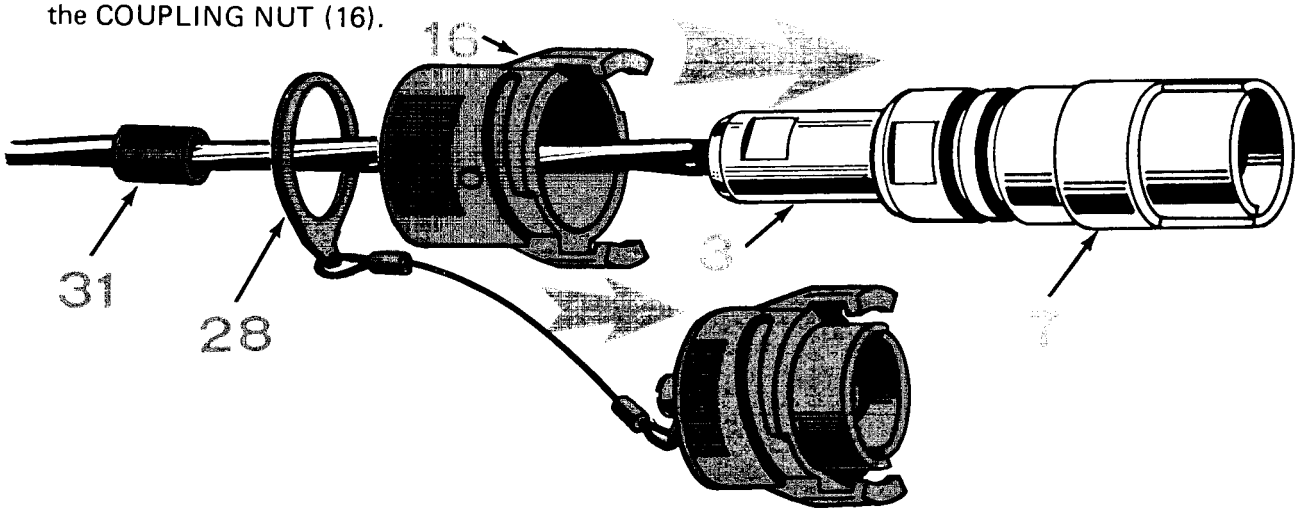


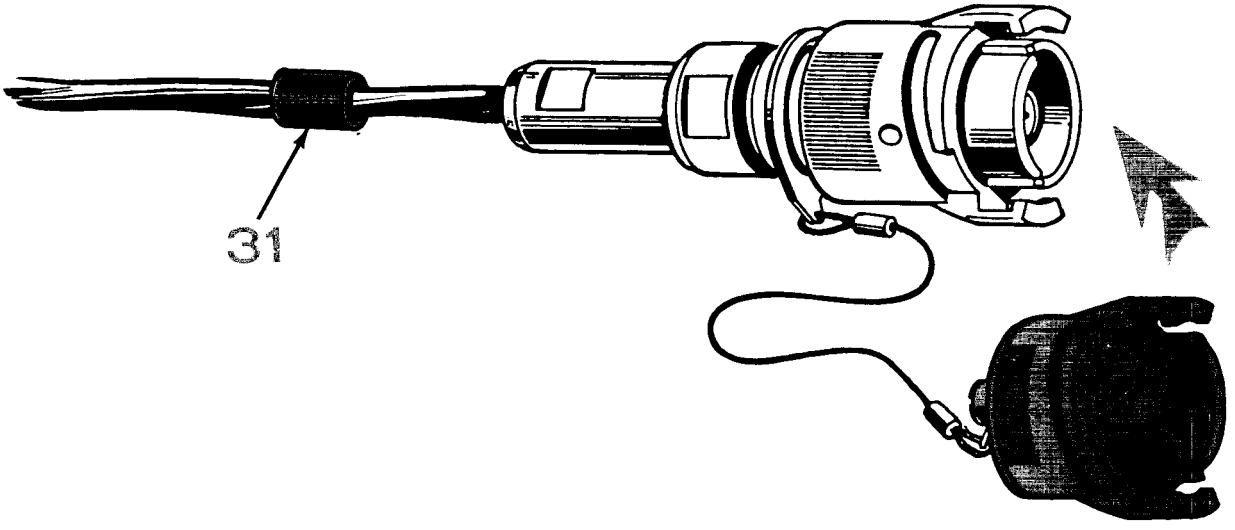


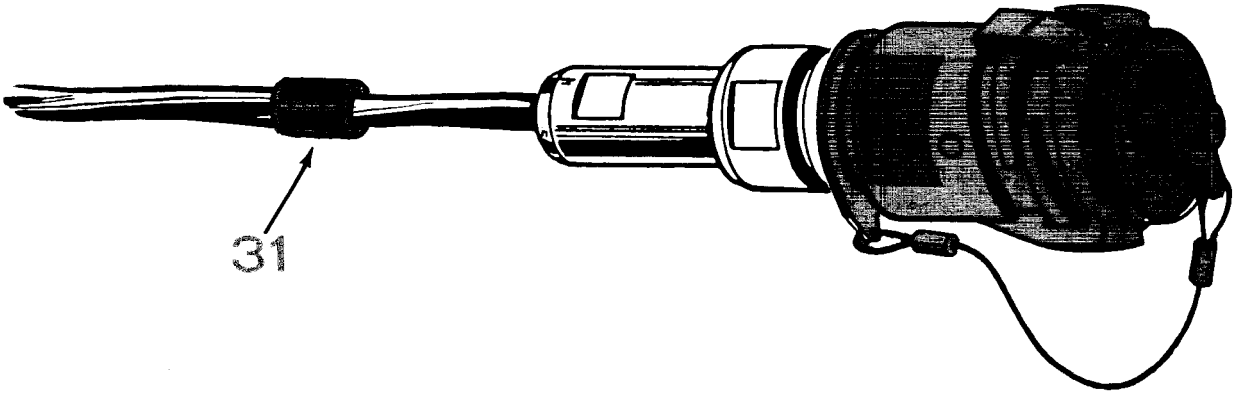

Slide the SLEEVE (31) flush against the CLAMP NUT (3).

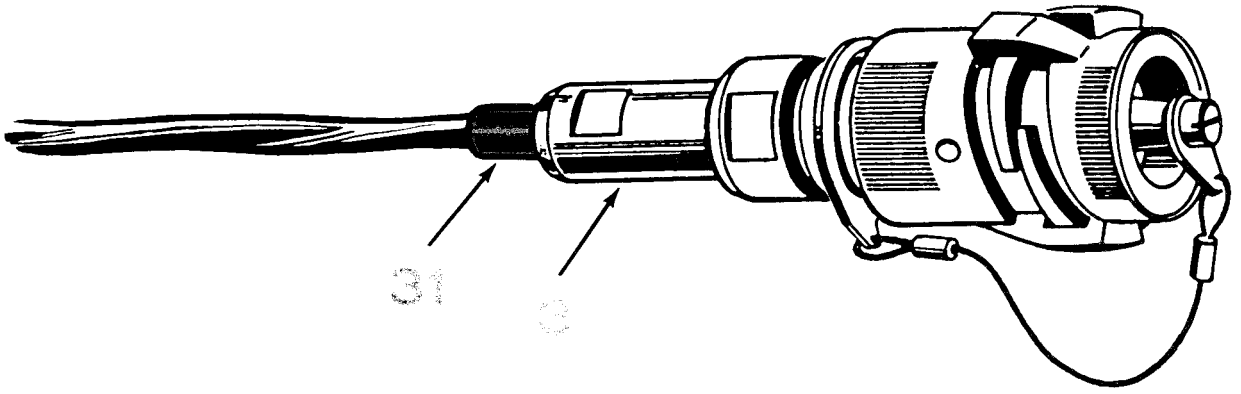


Apply SILICONE compound, MIL-A-46106A, TYPE 1, around the SLEEVE (31), the two grooves on the MAIN BODY (7) and on the front grooves inside the SEALING BOOT (1).

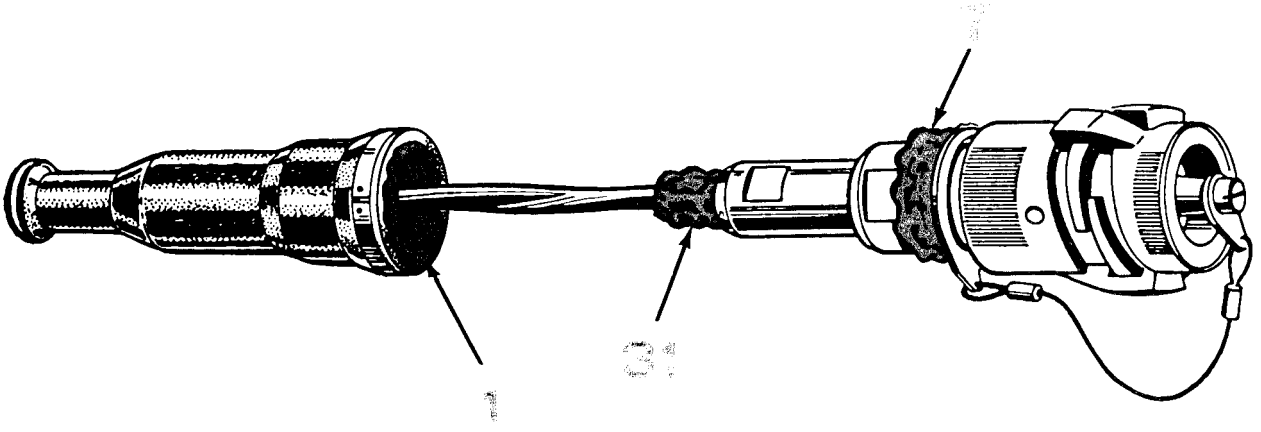

Slide down the SEALING BOOT (1) (with its RING (30) in place) over the two grooves on the MAIN BODY (7).

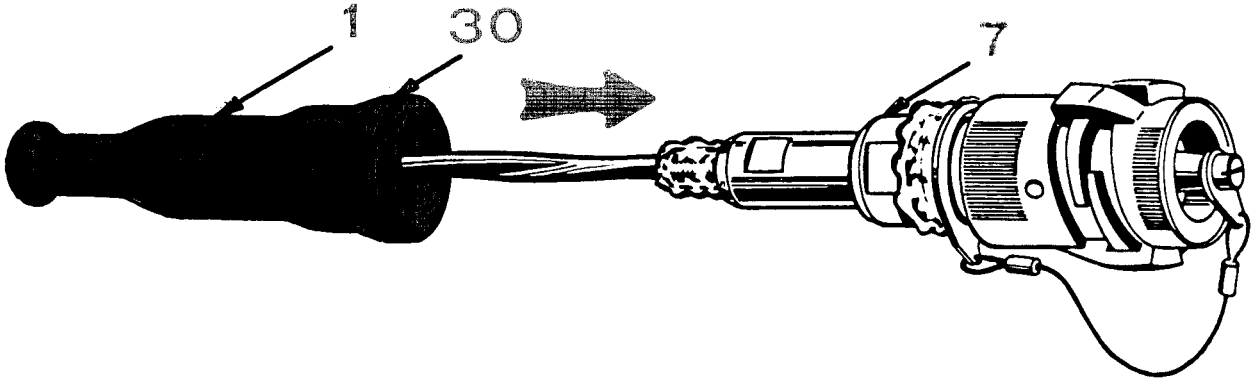


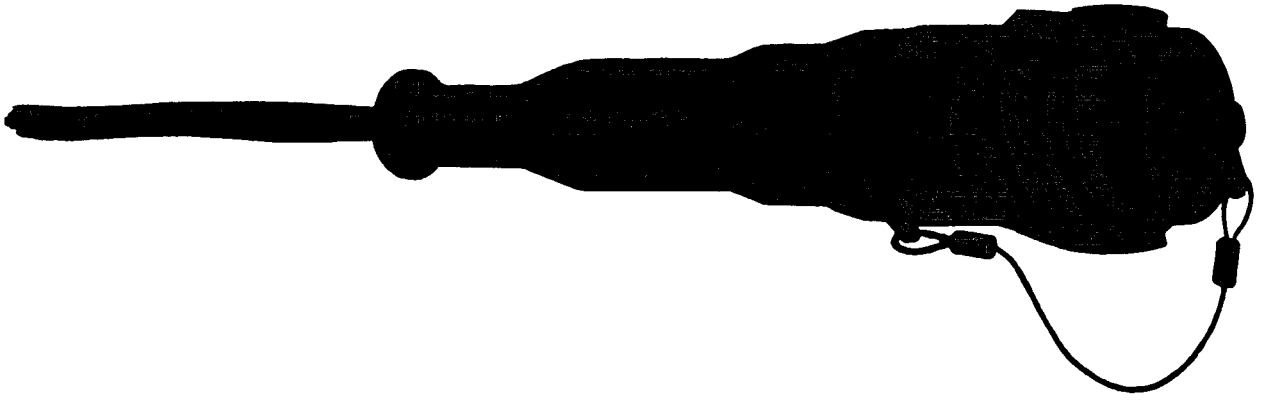

## Section VI. [illegible]

### 3-7. GENERAL

All cables returned to general support for action and all repaired cables should undergo the following:

a. Inspection.
b. Insulation breakdown/leakage test.

### 3-8. INSPECTION

a. Do all the PMCS items in Table 2-1.
b. Cables passing this inspection will undergo an insulation breakdown/leakage test.

### 3-9. INSULATION BREAKDOWN/LEAKAGE TEST

Setup the equipment to do this test as outlined in paragraph 3-10.

WARNING

EXTREMELY HIGH VOLTAGES EXIST WHEN USING THE

INSULATION BREAKDOWN TEST SET AN/GSM-6.

VOLTAGES AS HIGH AS 40,000 VOLTS MAY EXIST AT THE FOLLOWING

OUTPUT TERMINALS

OUTPUT CABLE

CABLE UNDER TEST.

DON'T TAKE CHANCES, BE EXTREMELY CAREFUL.

SERIOUS INJURY OR DEATH MAY RESULT IF YOU ARE NOT CAREFUL.

## 3-10. INSULATION BREAKDOWN/LEAKAGE TEST PROCEDURES

This task covers:
a. Setup
b. Testing

INITIAL SETUP

Test Equipment:
Insulation Breakdown
Test Set (AN/GSM-6)

Special Tools:
Tool Kit TK-100/G

Materials/Parts:
Twin Coax Cable stub
with CONNECTOR (UG-1870/U).
6 feet of bare copper
wire (single conductor, 18AWG).

Personnel Required:
2

WARNING
NEVER DO THIS TEST ALONE

Special Environmental Conditions

Do all testing in a room or area approved by your safety officer.

STEP 1

Setup the Insulation Breakdown Test Set (AN/GSM-6) but DO NOT TURN IT ON.

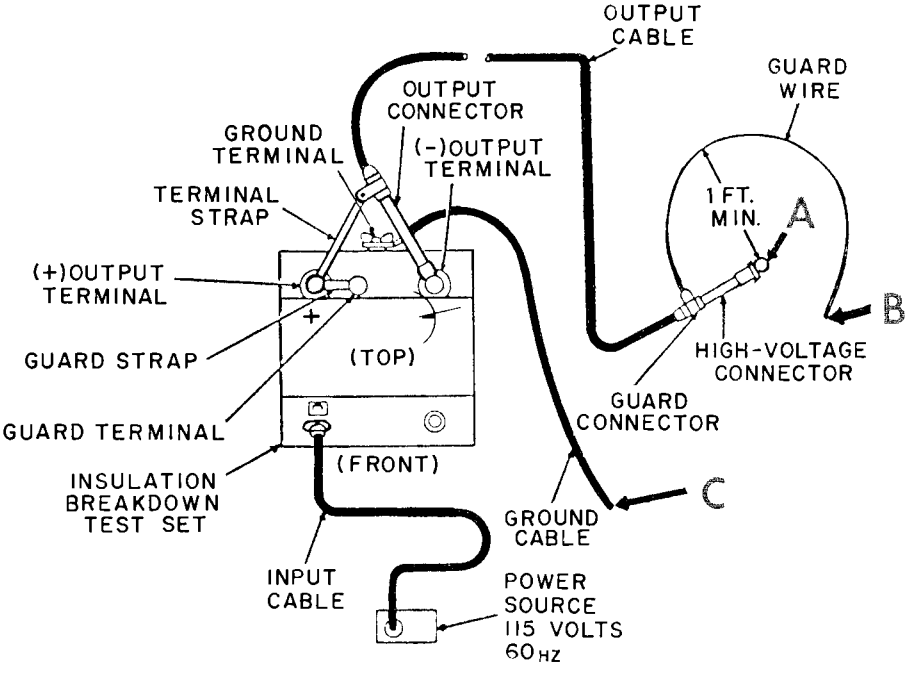


A = test point on the output cable, the "hot" side of the AN//GSM-6.

B = test point for the other side of the output cable, connected by a "GUARD WIRE" (bare copper, single conductor, 18 AWG).

C = GROUND for the AN/GSM-6, IT MUST BE CONNECTED TO THE GROUND CLAMP (test point in STEP 2).

Setup a test cable stub. Use known good components. This test cable stub should be secured to prevent accidental touching of leads while testing.

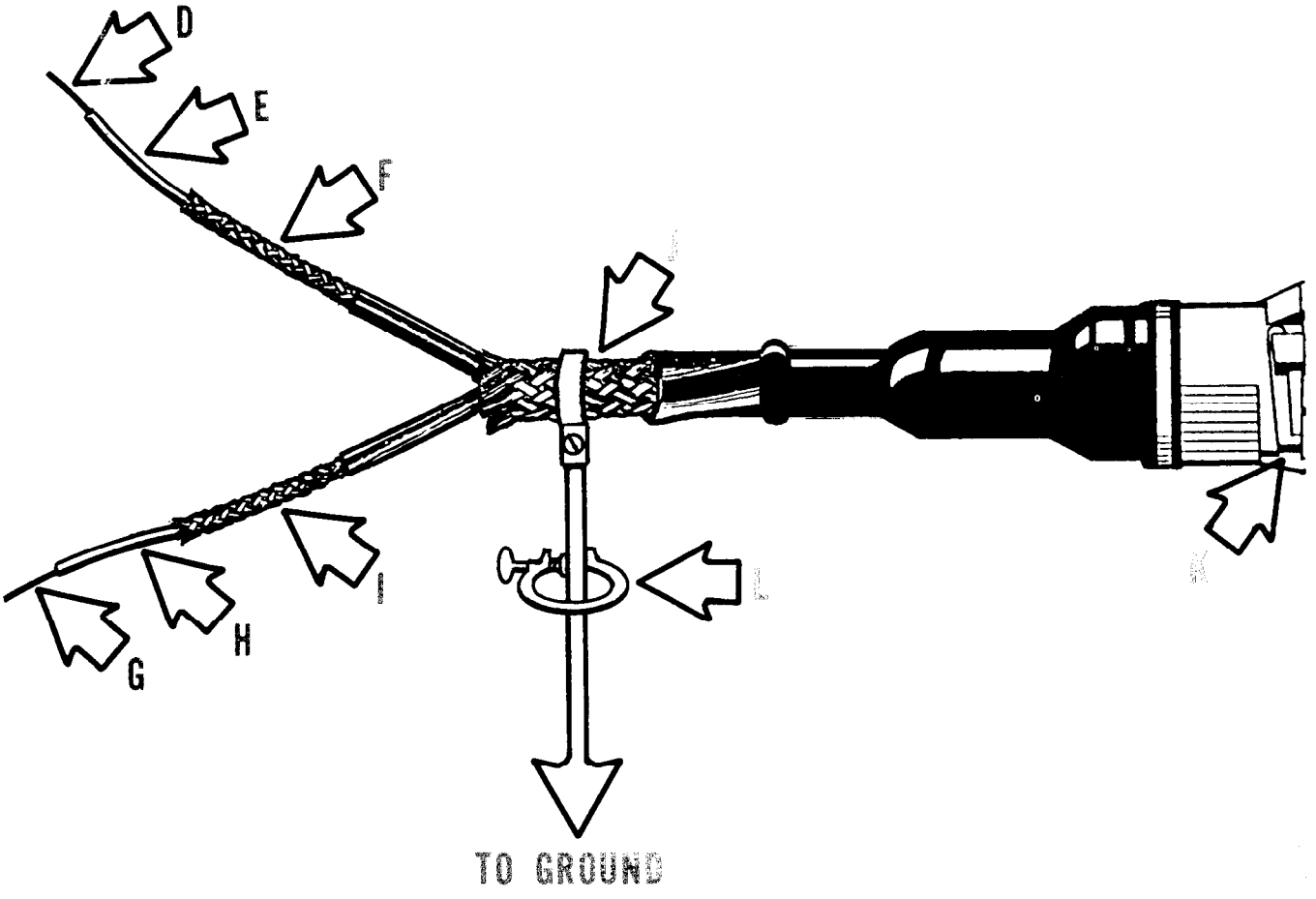


D = test point on the tinned center conductor of the first coaxial cable.
E = test point on the insulation of the first coaxial cable.
F = test point on the braid of the first coaxial cable.

G = test point on the tinned center conductor of the second coaxial cable.
H = test point on the insulation of the second coaxial cable.
I = test point on the braid of the second coaxial cable.

J = test point on the outer support braid of the twin coaxial cable.

K = connection for 100 foot or mile lengths of TWIN COAXIAL CABLE (CX-11230/G), or TWIN COAX ADAPTER CABLE (CX-10734/G) undergoing test.

L = GROUND CLAMP, connected to a rod or strap which is connected to the approved ground for the work area. Test point and test point connect to ground through the rod or strap.

Do the complete "Preoperational Procedures" on the AN/GSM-6 as outlined in TM 11-6625-273-12 (paragraph 12) and then do a complete "Stopping Procedure" (paragraph 17 in TM 11-6625-273-12).

Prepare to test the first coaxial cable. Do the "starting Procedures" AN/GSM-6 as outlined in TM 11-6625-273-12 (paragraph 14) with the equipment and cables connected as follows:

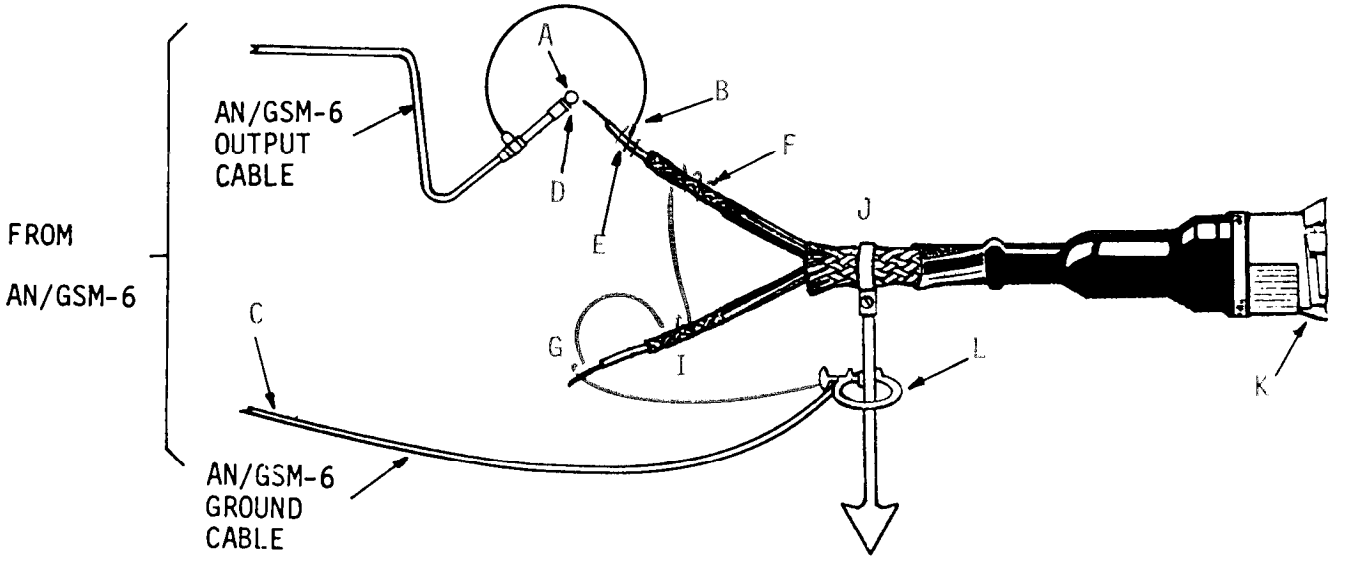


a. Connect test point A to the tinned center conductor of the first coaxial cable (test point D).

b. Tightly wrap the GUARD WIRE (test point B) around the insulation of the first coaxial cable (test point E).

c. Tightly wrap a length of bare copper wire (solid 18 AWG) around the braid of the first coaxial cable (test point F)

and

continue the wire and tightly wrap the wire around the braid of the second coaxial cable (test point I)

and

continue the wire and tightly wrap the wire around the center conductor of the second coaxial cable (test point G)

and

continue the wire to the GROUND CLAMP (L).

d. Clamp the wire and the AN/GSM-6 GROUND CABLE onto the ground rod or ground strap.

e. Connect the cable to be tested to test point K.

WARNING

TWIN COAX CABLES (CX-11230/G) under test must be CAPPED at the other end.

TWIN COAX ADAPTER CABLES (CX-10734/G) <u>must not be</u> connected at the other end.

Do the "Withstand Test" on the first coaxial cable. Follow the procedures outlined in TM 11-6625-273-12 (paragraph 15) using the following settings and procedures:

a. apply 2.500 volts (2.5 KILOVOLTS).

b. apply this voltage for

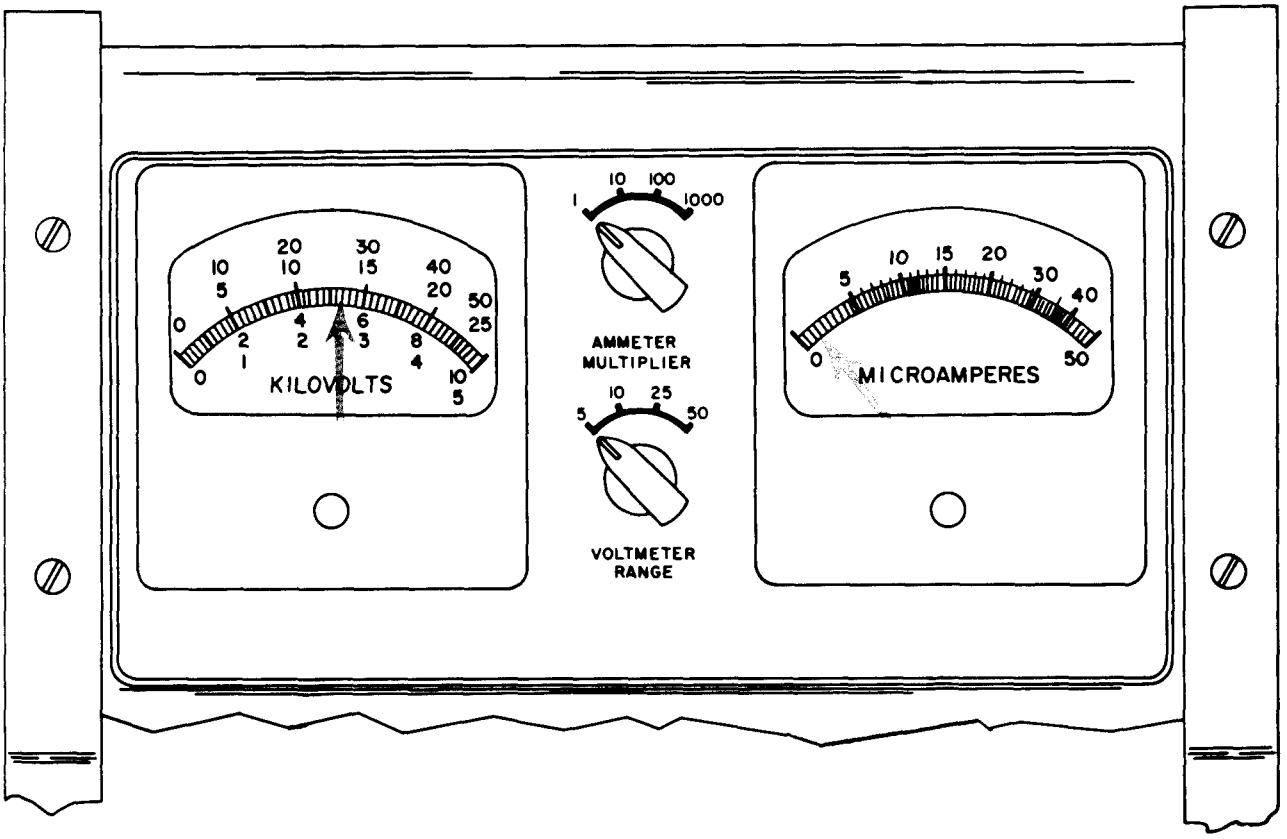


CAUTION: If the DCOVERLOAD indicator on the AN/GSM-6 lights up - STOP THE TEST because you have a BAD CABLE.

c. During the ONE MINUTE you are applying the 2,500 volts, observe the MICROAMPERES meter. If the leakage current reaches 50 microamperes, you have a bad cable, STOP THE TEST.

d. If the first coaxial cable passes the test voltage for one minute, stop applying the voltage and do a complete "Stopping Procedure" as outlined in TM 11-6625-273-12(paragraph 17).

CAUTION: Whenever you stop the test, you must always do a complete "Stopping Procedure". This will allow you to safely proceed with other steps.

Prepare to test the second coaxial cable. Do the "Starting Procedures" on the AN/GSM-6 as outlined in TM 11-6625-273-12 (paragraph 14) with the equipment and cables connected as follows:

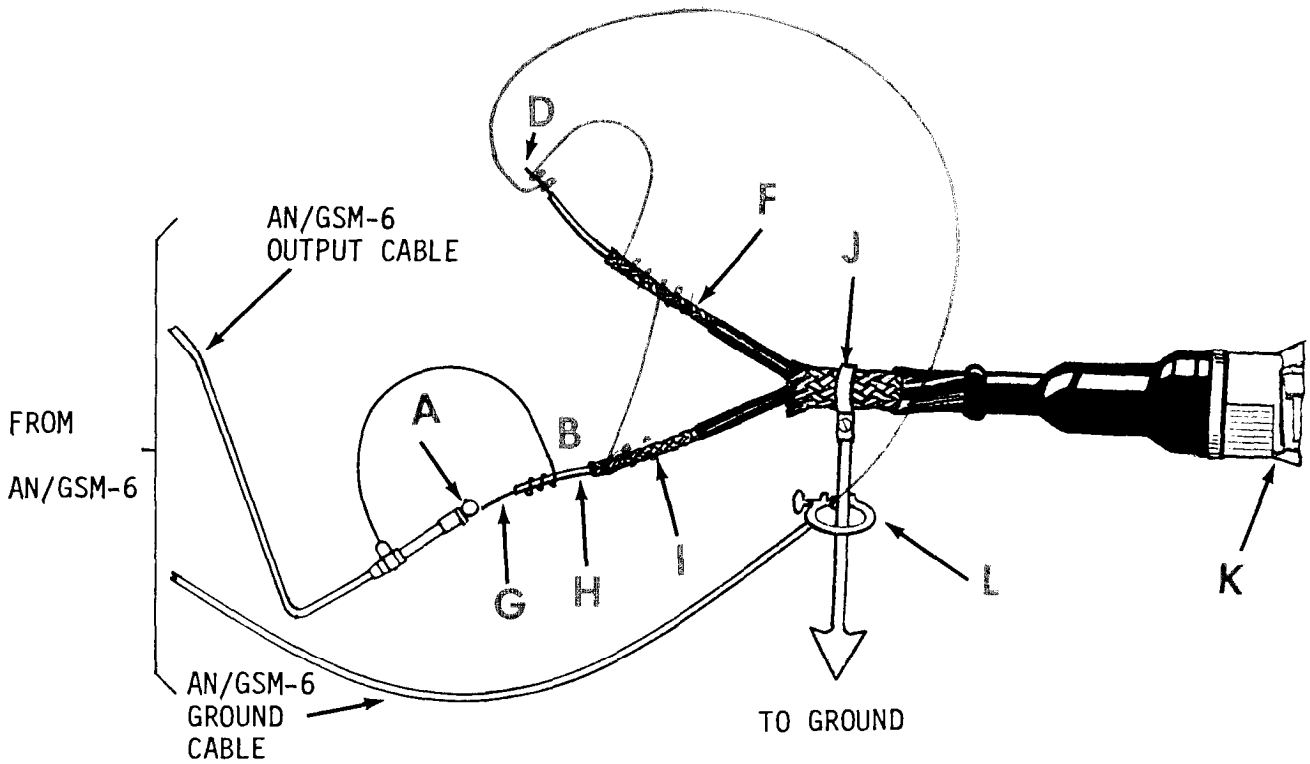


a. Connect test point A to the tinned center conductor of the second coaxial cable (test point G).

b. Tightly wrap the GUARD WIRE (test point B) around the insulation of the second coaxial cable (test point H).

c. Tightly wrap a length of bare copperware (solid 18 AWG) around the braid of the second coaxial cable (test point I).

and

continue the wire and tightly wrap the wire around the braid of the first coaxial cable (test point F).

and

continue the wire and tightly wrap the wire around the center conductor of the first coaxial cable (test point D).

and

continue the wire to the GROUND CLAMP (L).

d. Clamp the wire and the AN/GSM-6 GROUND CABLE onto the ground rod or ground strap.

# STEP 7

Do the "withstand Test" on the second coaxial cable. Follow the procedures outlined in TM 11-6625-273-12 (paragraph 15) using the following settings and procedures:

a. apply 2,500 volts (2.5 KILOVOLTS).

WARNING
BE CAREFUL

b. apply this voltage for ONE MINUTE.

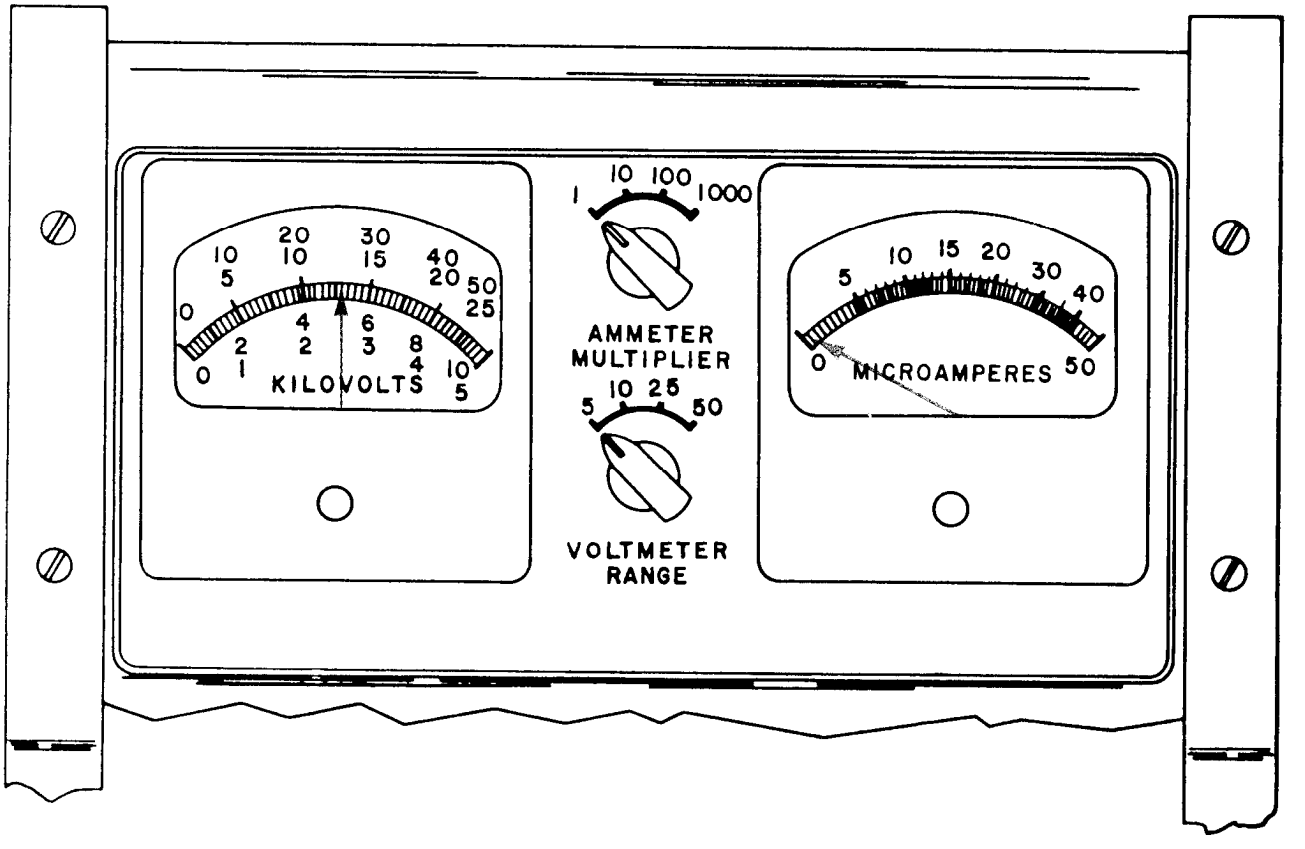


CAUTION: If the DC OVERLOAD indicator on the AN/GSM-6 lights up - STOP THE TEST because you have a BAD CABLE.

c. During the ONE MINUTE you are applying the 2,500 volts, observe the MICROAMPERES meter. If the leakage current reaches 50 microampere, you have a bad cable, STOP THE TEST.

d. If the second coaxial cable passes the test voltage for one minute, stop applying the voltage and do a complete "Stopping Procedure" as outlined in TM 11-6625-273-12 (paragraph 17).

CAUTION: Whenever you stop the test, you must always do a complete "Stopping Procedure".

## 3-11. RESISTANCE CHECK

All ¼ mile lengths of Twin Coaxial Cable (CX-11230/G) which have passed the Insulation Breakdown/Leakage Test of paragraph 3-9 shall undergo a resistance check. Use Resistance Bridge ZM-4(*)/U. Follow the instructions of paragraph 14 in TM 11-2019. The following data apply:

**NOTE**

When measuring the resistance of cable assemblies that are measured less than ¼ mile (1320 feet) allow 1 ohm resistance for every 52.8 feet of cable (i.e. - a 1000 foot length of cable should not measure more than 18.95 ohms).

a. The dc resistance of the center conductor in EACH coaxial cable shall not exceed 25 ohms for a full ¼ mile (1320 foot) cable assembly.

b. The dc resistance of the shield in EACH coaxial cable shall not exceed 8½ ohms.

**NOTES**

Any cable having a higher resistance shall be considered defective. Further action on these defective cables shall be determined by your supervisor.

Remember, even if a cable passes all of the tests, it may not work well in a system.

A final dynamic test is desirable. It may be possible for your supervisor to arrange for a dynamic test using MUX equipment.

# APPENDIX A

## REFERENCES

| | |
|---|---|
| CTA 50-970 | Expendable Items (Except: Medical, Class V, Repair Parts and Heraldic Items) |
| FM 24-20 | Field Wire and Field Cable Techniques |
| SB 38-100 | Preservation, Packing and Marking Materials, Supplies, and Equipment used by the Army |
| SB 708-42 | Federal Supply Code for Manufacturers; United States and Canada -- Code to Name (H4-2) (GSA-FSS-H4-2) |
| SF 5180-91-CL-R13 | Tool Kit, Electronic Equipment TK-101/G (NSN 5180-00-064-5178) |
| SC 5180-91-CL-S21 | Tool Kit, Electronic Equipment, TK-100/G (NSN 5180-00-605-0079) |
| TB SIG 222 | Solder and Soldering |
| TB 746-10 | Field Instructions for Painting and Preserving Electronics Command Equipment |
| TM 11-2019 | Test Sets 1-49, 1-49-A, and 1-49-B and Resistance Bridges ZM-4A/U and ZM-4B/U |
| TM 11-5805-367-12 | Operator's and Organizational Maintenance Manual; Multiplexer TD-202/U (NSN 5805-00-884-2176), TD-203/U (NSN 5805-00-884-2177), , TD-204/U (NSN 5805-00-900-8200), TD-352/U (NSN 5805-00-900-8199), , and TD-353/U (NSN 5805-00-985-9153); Restorers, Pulse Form TD-206/G (NSN 5805-00-868-8078) and TD-206B/G (NSN 5805-01-020-2251) and Converters, Telephone Signal CV-1548/G (NSN 5805-00-069-8795) and CV-1548A/G (NSN 5805-00-069-8795) |
| TM 11-5805-367-35/4 | Direct Support, General Support, and Depot Maintenance Manual, Restorers, Pulse Form TD-206/G |
| TM 11-5805-383-12 | Operator's and Organizational Maintenance Manual Multiplexer, TD-754/G (NSN 5820-00-930-8078) |
| TM 11-5995-208-10 | Operator's Manual for Cable Assembly, Special Purpose, Electrical CX-11230/G (¼ mile) (NSN 5995-00-133-9126), CX-11230/G (100 foot) (NSN 5995-00-133-9127), CX-11230A/G (1320 foot) (NSN 5995-01-121-6623), CX-11230A/G (100 foot) (NSN 5995-01-125-6781) and CX-10734/G (NSN 5995-00-133-9125) |

## APPENDIX A

### REFERENCES (cont'd)

| | |
|---|---|
| TM 11-6625-273-12 | Operational and Organizational Maintenance: Insulation Breakdown Test Sets AN/GSM-6 and AN/GSM-6A |
| TM 11-6625-273-35 | Field and Depot Maintenance Manual: Test Sets, Insulation Breakdown AN/GSM-6 and AN/GSM-6A |
| TM 11-6625-366-15 | Operator's Organizational, Direct Support, General Support, and Depot Maintenance Manual: Multimeter TS-352B/U. |
| TM 11-6625-648-12 | Operator and Organizational Maintenance Manual: Test Set Telephone AN/PTM-7 (NSN 6625-00-902-7574) |
| TM 38-750 | The Army Maintenance Management System (TAMMS) |
| TM 750-244-2 | Procedures For Destruction of Electronics Material to Prevent Enemy Use (Electronics Command) |

# APPENDIX B

# MAINTENANCE ALLOCATION

## Section I. INTRODUCTION

### B-1. General

This appendix provides a summary of the maintenance operations for CX-11230/G and CX-10734/G. It authorizes categories of maintenance for specific maintenance functions on repairable items and components and the tools and equipment required to perform each function. This appendix may be used as an aid in planning maintenance operations.

### B-2. Maintenance Function

Maintenance functions will be limited to and defined as follows:

a. Inspection. To determine the serviceability of an item by comparing its physical, mechanical, and/or electrical characteristics with established standards through examination.

b. Test. To verify serviceability and to detect incipient failure by measuring–the mechanical or electrical characteristics of an item and comparing those characteristics with prescribed standards.

c. Service. Operations required periodically to keep an item in proper operating condition, i.e., to clean (decontaminate), to preserve, to drain, to paint, or to replenish fuel, lubricants, hydraulic fluids, or compressed air supplies.

d. Adjust. To maintain, within prescribed limits, by bringing into proper or exact position, or by setting the operating characteristics to the specified parameters.

e. Align. To adjust specified variable elements of an item to bring about optimum or desired performance.

f. Calibrate. To determine and cause corrections to be made or to be adjusted on instruments or test measuring and diagnostic equipments used in precision measurement, Consists of comparisons of two instruments, one of which is a certified standard of known accuracy, to detect and adjust any discrepancy in the accuracy of the instrument being compared.

g. Install. The act of emplacing, seating, or fixing into position an item, part, module (component or assembly) in a manner to allow the proper functioning of the equipment or system.

h. Replace. The act of substituting a serviceable like type part, subassembly, or module component or assembly) for an unserviceable counterpart.

i. Repair. The application of maintenance services (inspect, test, service. adjust, align, calibrate, replace) or other maintenance actions (welding, grinding, riveting, straightening, facing, remachining, or resurfacing) to restore service-ability-to an item by correcting specific damage, fault, malfunction, or failure in a part, subassembly, module (component or assembly), end item, or system.

j. Overhaul. That maintenance effort (service/action) necessary to restore an item to a completely serviceable/operational condition as prescribed by maintenance standards (i.e., DMWR) in appropriate technical publications. Overhaul is normally the highest degree of maintenance performed by the Army. Overhaul does not normally return an item to like new condition.

k. Rebuild. Consists of those services/actions necessary for the restoration of unserviceable equipment to a like new condition in accordance with original manufacturing standards. Rebuild is the highest degree of materiel maintenance applied to Army equipment. The rebuild operation includes the act of returning to zero those age measurements (hours, miles, etc.) considered in classifying Army equipments/components.

B-3. Column Entries

a. Column 1, Group Number. Column 1 lists group numbers, the purpose of which is to identify components, assemblies, subassemblies, and modules with the next higher assembly.

b. Column 2, Component/Assembly. Column 2 contains the noun names of components, assemblies, subassemblies, and modules for which maintenance is authorized.

c. Column 3, Maintenance Functions. Column 3 lists the functions to be performed on the item listed in column 2. When items are listed without maintenance functions, it is solely for purpose of having the group numbers in the MAC and RPSTL coincide.

d. Column 4, Maintenance Category. Column 4 specifies, by the listing of a "work time" figure in the appropriate subcolumn(s), the lowest level of maintenance authorized to perform the function listed in column 3. This figure represents the active time required to perform that maintenance function at the indicated category of maintenance. If the number or complexity of the tasks within the listed maintenance function vary at different maintenance categories, appropriate "work time" figures will be shown for each category. The number of task-hours specified by the "work time" figure represents the average time required to restore an item (assembly, subassembly, component, module, end item or system) to a serviceable condition under typical field operating conditions. This time includes preparation time, troubleshooting time, and quality assurance/quality control time in addition to the time required to perform the specific tasks identified for the maintenance functions authorized in the maintenance allocation chart. Subcolumns of column 4 are as follows:

C - Operator/Crew
O - Organizational
F - Direct Support
H - General Support
D - Depot

e. Column 5, Tools and Equipment. Column 5 specifies by code, those common tool sets (not individual tools) and special tools, test, and support equipment required to perform the designated function.

f. Column 6, Remarks. Column 6 contains an alphabetic code which leads to the remark in section IV, Remarks, which is pertinent to the item opposite the particular code.

B-4. Tool and Test Equipment Requirements (Sect. III).

a. Tool or Test Equipment Reference Code. The numbers in this column coincide with the numbers used in the tools and equipment column of the MAC. The numbers indicate the applicable tool or test equipment for the maintenance functions.

b. Maintenance Category. The codes in this column indicate the maintenance category allocated the tool or test equipment.

c. Nomenclature. This column lists the noun name and nomenclature of the tools and test equipment required to perform the maintenance functions.

d. National/NATO Stock Number. This column lists the National/NATO stock number of the specific tool or test equipment.

e. Tool Number. This column lists the manufacturer's part number of the tool followed by the Federal Supply Code for manufacturers (5-digit) in parentheses.

B-5 Remarks (Sect. IV).

a. Reference Code. This code refers to the appropriate item in section II, column 6.

b. Remarks. This column provides the required explanatory information necessary to clarify items appearing in section II.

SECTION II MAINTENANCE ALLOCATION CHART
FOR
CABLE ASSEMBLY, SPECIAL PURPOSE CX-11230/G AND CABLE ASSEMBLY, ADAPTER CX-10734/G

| (1) GROUP NUMBER | (2) COMPONENT ASSEMBLY | (3) MAINTENANCE FUNCTION | (4) MAINTENANCE CATEGORY C | O | F | H | D | (5) TOOLS AND EQPT. | (6) REMARKS |
|---|---|---|---|---|---|---|---|---|---|
| 01 | 'ABLE ASSEMBLY, SPECIAL PURPOSE CX-11230/G | Inspect | | 0.2 | | | | | |
| | | Test | 0.5 | 0.5 | | | | 1 | A |
| | | Install | 0.5 | | | | | 1 | |
| | | Repair | | 0.5 | | | | 4 | B |
| | | Repair | | | | 2.5 | | 5 thru 12 | C |
| | | Test | | | | 1.0 | | 2,3 | |
| 02 | ABLE ASSEMBLY, SPECIAL PURPOSE CX-11230/G 100 FEET) | Inspect | | 0.2 | | | | | |
| | | Test | 0.5 | 0.5 | | | | 1 | A |
| | | Install | 0.5 | | | | | 1 | B |
| | | Repair | | 0.5 | | | | 4 | B |
| | | Repair | | | | 2.5 | | 5 thru 12 | C |
| | | Test | | | | 1.0 | | 2,3 | |
| 03 | ABLE ASSEMBLY, ADAPTER CX-10734/G | Inspect | | 0.2 | | | | 4 | B |

SECTION III TOOL AND TEST EQUIPMENT REQUIREMENTS
FOR
CABLE ASSEMBLY, SPECIAL PURPOSE CX-11230/G AND CABLE ASSEMBLY, ADAPTER CS-10734/G

| TOOLS OR TEST EQUIPMENT REF CODE | MAINTENANCE CATEGORY | NOMENCLATURE | NATIONAL/NATO STOCK NUMBER | TOOL NUMBER |
|---|---|---|---|---|
| 1 | C,O | TEST SET, TELEPHONE AN/PTM-7 | 6625-00-902-7574 | |
| 2 | H | TEST SET, INSULATION BREAKDOWN AN/GSM-6 | 6625-00-542-1331 | |
| 3 | H | RESISTANCE BRIDGE ZM-4B/U | 6625-00-500-0937 | |
| 4 | O | TOOL KIT, ELECTRONIC EQUIPMENT TK-101/G | 5180-00-064-5178 | |
| 5 | H | TOOL KIT, ELECTRONIC EQUIPMENT TK-105/G | 5180-00-610-8177 | |
| 6 | H | TORQUE WRENCH | 5120-00-230-6380 | |
| 7 | H | WRENCH, CROWFOOT 3/8 INCH | 5120-00-181-6784 | |
| 8 | H | WRENCH, CROWFOOT 15/16 INCH | 5120-00-184-8403 | |
| 9 | H | TORQUE SCREWDRIVER | 5120-00-568-4742 | |
| 10 | H | WIRE BRUSH | 7510-00-559-9833 | |
| 11 | H | MULTIMETER-TS-352B/U OR MULTIMETER AN/USM-223 | 6625-00-553-0142 | |
| 12 | H | TOOL KIT, ELECTRONIC EQUIPMENT TK-100/G | 5180-00-605-0079 | |

## SECTION IV. REMARKS

| REFERENCE CODE | REMARKS |
|---|---|
| A | OPERATIONAL LOOP-BACK TEST. |
| B | REPLACE CONNECTOR CAP. |
| C | REPAIR TO BE PERFORMED BY HOLDER OF MOS 26L. |

# APPENDIX C

# ORGANIZATIONAL, DIRECT SUPPORT, AND GENERAL SUPPORT MAINTENANCE REPAIR PARTS AND SPECIAL TOOLS LIST (INCLUDING DEPOT MAINTENANCE REPAIR PARTS AND SPECIAL TOOLS)

## Section I. INTRODUCTION

### C-1. Scope

This appendix lists spares and repair parts; special tools; special test, measurement, and diagnostic equipment (TMDE), and other special support equipment required for performance of organizational, direct support, and general support maintenance of the CX-11230/G and CX-10734/G. It authorizes the requisitioning and issue of spares and repair parts as indicated by the source and maintenance codes.

### C-2. General

This Repair Parts and Special Tools List is divided into the following sections:

a. Section II. Repair Parts List. A list of spares and repair parts authorized for use in the performance of maintenance. The list also includes parts which must be removed for replacement of the authorized parts. Parts lists are composed of functional groups in numeric sequence, with the parts in each group listed in figure and item number sequence.

b. Section III. Special Tools List. Not applicable.

c. Section IV. National Stock Number and Part Number Index. A list, in National item identification number (NIIN) sequence, of all National stock numbers (NSN) appearing in the listings, followed by a list, in alphameric sequence, of all parts numbers appearing in the listings. National stock numbers and part numbers are cross-referenced to each illustration figure and item number appearance.

### C-3. Explanation of Columns

a. Illustration. This column is divided as follows:

(1) Figure number. Indicates the figure number of the illustration on which the item is shown.

(2) Item number. The number used to identify item called out in the illustration.

b. Source, Maintenance, and Recoverability (SMR) Codes.

(1) Source code. Source codes indicate the manner of acquiring support items for maintenance, repair, or overhaul of end items. Source codes are entered in the first and second positions of the Uniform SMR Code format as follows:

| Code | Definition |
|---|---|
| PA -- | Item procured and stocked for anticipated or known usage. |

NOTE

Cannibalization or salvage may be used as a source of supply for any items source coded above except those coded XA and aircraft support items as restricted by AR 700-42.

(2) Maintenance code. Maintenance codes are assigned to indicate the levels of maintenance authorized to USE and REPAIR support items. The maintenance codes are entered in the third and fourth positions of the Uniform SMR Code format as follows:

(a) The maintenance code entered in the third position will indicate the lowest maintenance level authorized to remove, replace, and use the support item. The maintenance code entered in the third position will indicate one of the following levels of maintenance:

| Code | Application/Explanation |
|---|---|
| O -- | Support item is removed, replaced, used at the organizational level. |
| H -- | Support item is removed, replaced, used at the general support level. |

(b) The maintenance code entered in the fourth position indicates whether the item–is to be repaired and identifies the lowest maintenance level with the capability to perform complete repair (i.e., all authorized maintenance functions). This position will contain one of the following maintenance codes:

| Code | Application/Explanation |
|---|---|
| H -- | The lowest maintenance level capable of complete repair of the support item is the general support level. |
| Z -- | Nonreparable. No repair is authorized. |

(3) Recoverability code. Recoverability codes are assigned to support items to indicate the disposition action on unserviceable items. The recoverability code s entered in the fifth position of the Uniform SMR Code format as follows:

| Recoverability codes | Definition |
|---|---|
| Z -- | Nonreparable item. When unserviceable, condemn and dispose at the level indicted in position 3. |
| D -- | Reparable item. When beyond lower level repair capability, return to depot. Condemnation and disposal not authorized below depot level. |

c. National Stock Number. Indicates the National stock number assigned to the–item and will be used for requisitioning purposes.

d. Part Number. Indicates the primary number used by the manufacturer individual, company, firm, corporation, or Government activity, which controls the design and characteristics of the item by means of its engineering drawings, specifications, standards, and inspection requirements to identify an item or range of items.

NOTE

When a stock numbered item is requisitioned, the repair part received may have a different part number than the part being replaced.

e. Federal SUpply Code for Manufacturer (FSCM). The FSCM is a 5-digit numeric code listed in SB 708-42 which is used to identify the manufacturer, distributor, or Government agency, etc.

f. Description. Indicates the Federal item name and, if required, a minumum description to identify the item.

g. Unit of Measure (U/M). Indicates the standard of the basic quantity of the listed item as used in performing the actual maintenance function. This measure is expressed by a two-character alphabetical abbreviation (e.g., ea, in, pr, etc). When the unit of measure differs from the unit of issue, the lowest unit of issue that will satisfy the required units of measure will be requisitioned.

h. Quantity Incorporated in Unit. Indicates the quantity of the item used in the–breakout shown on the illustration figure, which is prepared for a functional group, subfunctional group, or an assembly.

C-4. Special Information

Not applicable.

C-5. How to Locate Repair Parts

a. When National stock number or part number is unknown.

(1) First. Using the table of contents, determine the functional group within which item belongs. This is necessary since illustrations are prepared for functional groups and listings are divided into the same groups.

(2) Second. Find the illustration covering the functional group to which the item belongs.

(3) Third. Identify the item on the illustration and note the illustration figure and item number of the item.

(4) Fourth. Using the Repair Parts Listing find the figure and item number noted on the illustration.

b. When National stock number or part number is known.

(1) First. Using the Index of National Stock Numbers and Part Numbers, find the pertinent National stock number or part number. This index is in NIIN sequence followed by a list of part numbers in alphameric sequence, cross-referenced to the illustration figure and item number.

(2) Second. After finding the figure and item number, locate the figure and item number in the repair parts list.

C-6. Abbreviations

Not applicable.

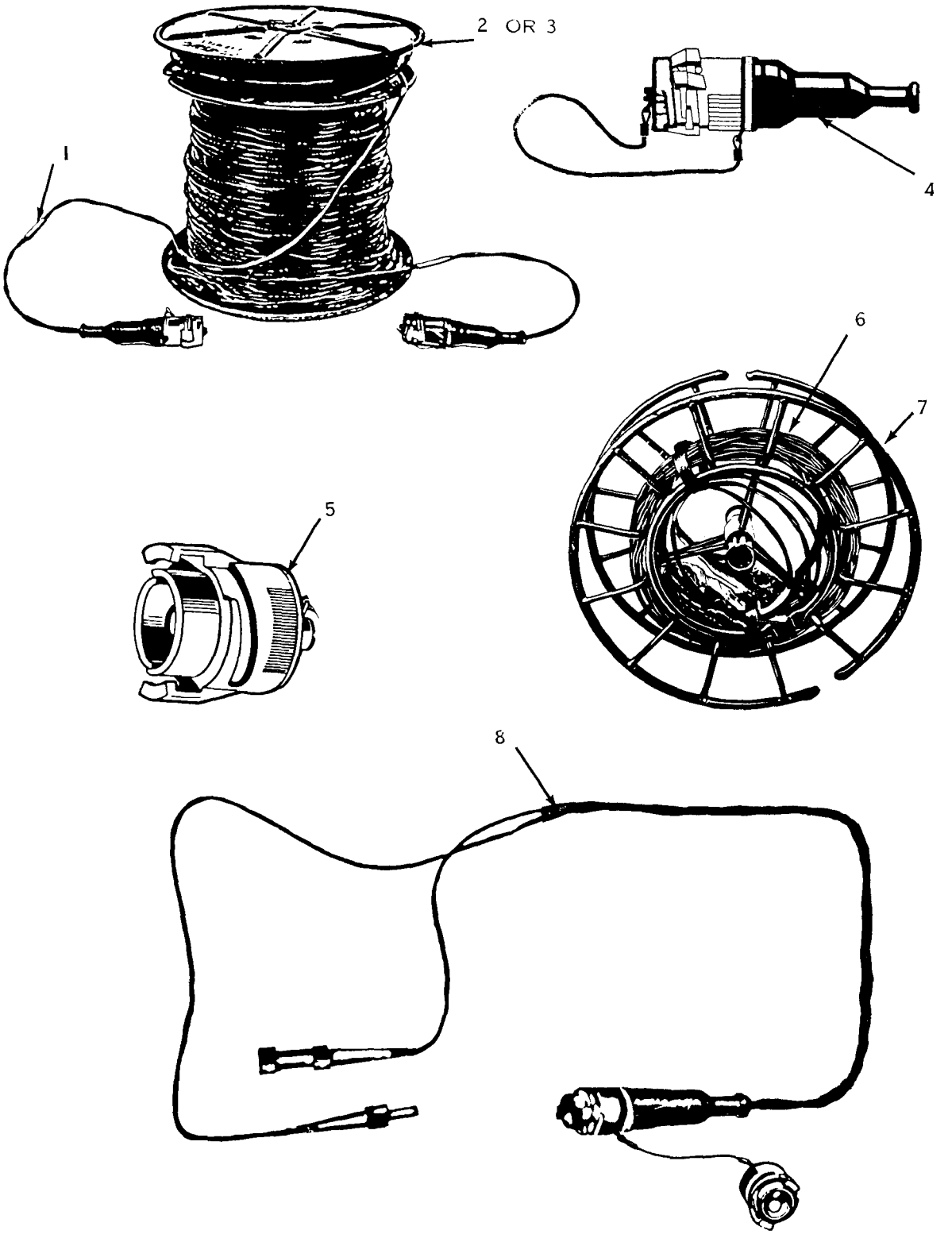


Figure C-1. Cable Assembly, Special Purpose, Electrical CX-11230/G (1/4 Mile and 100 Feet) and Cable Assembly, Adapter CX-10734/G.

| (1) ILLUSTRATION (a) FIG. NO. | (1) ILLUSTRATION (b) ITEM NO. | (2) SMR CODE | (3) NATIONAL STOCK NUMBER | (4) PART NUMBER | (5) FSCM | (6) DESCRIPTION | USABLE ON CODE | (7) U/M | (8) QTY INC IN UNIT |
|---|---|---|---|---|---|---|---|---|---|
| | | | | | | GROUP 01 CABLE ASSEMBLY, SPECIAL PURPOSE, ELECTRICAL CX-11230/G (1/4 MILE) | | | |
| C-1 | 1 | PAOHD* | 5995-00-133-9126 | CX-11230/G (1/4 MILE) | 80063 | CABLE ASSEMBLY, SPECIAL PURPOSE, ELECTRICAL | | EA | 1 |
| C-1 | 2 | PAOZZ | 8130-00-964-9014 | RC-453/G | 80063 | REEL, CABLE | | EA | 1 |
| | | | | | | OR | | | |
| C-1 | 3 | PAOZZ | 8130-00-263-8646 | DR-15B | 80063 | REEL, CABLE | | EA | 1 |
| C-1 | 4 | PAHZZ | 5935-00-179-4688 | UG-1870/U | 80063 | CONNECTOR, PLUG, ELECTRICAL | | EA | 2 |
| C-1 | 5 | PAOZZ | 5999-00-136-9040 | SC-C-388423 | 80063 | CAP, ELECTRICAL | | EA | 2 |
| | | | | | | GROUP 02 CABLE ASSEMBLY, SPECIAL PURPOSE, ELECTRICAL CX-11230/G (100 FEET) | | | |
| C-1 | 4 | PAHZZ | 5935-00-179-4688 | UG-1870/U | 80063 | CONNECTOR, PLUG, ELECTRICAL | | EA | 2 |
| C-1 | 5 | PAOZZ | 5999-00-136-9040 | SC-C-388423 | 80063 | CAP, ELECTRICAL | | EA | 2 |
| C-1 | 6 | PAOHD* | 5995-00-133-9127 | CX-11230/G (100 FEET) | 80063 | CABLE ASSEMBLY, SPECIAL PURPOSE, ELECTRICAL | | EA | 1 |
| C-1 | 7 | PAOZZ | 8130-00-656-1090 | RC-435/U | 80063 | REEL, CABLE | | EA | 1 |
| | | | | | | GROUP 03 CABLE ASSEMBLY, ADAPTER CX-10734/G | | | |
| C-1 | 5 | PAOZZ | 5999-00-136-9040 | SC-C-388423 | 80063 | CAP, ELECTRICAL | | EA | 1 |
| C-1 | 8 | PAOOZ | 5995-00-133-9125 | CX-10734/G | 80063 | CABLE ASSEMBLY, ADAPTER | | EA | 1 |

SECTION IV. NATIONAL STOCK NUMBER AND PART NUMBER INDEX

| STOCK NUMBER | FIG. NO. | ITEM NO. | STOCK NUMBER | FIG. NO. | ITEM NO. |
|---|---|---|---|---|---|
| 5995-00-133-9125 | C-1 | 8 | 5935-00-179-4688 | C-1 | 4 |
| 5995-00-133-9126 | C-1 | 1 | 5935-00-179-4688 | C-1 | 4 |
| 5995-00-133-9127 | C-1 | 6 | 8130-00-263-8646 | C-1 | 3 |
| 5999-00-136-9040 | C-1 | 5 | 8130-00-656-1090 | C-1 | 7 |
| 5999-00-136-9040 | C-1 | 5 | 8130-00-964-9014 | C-1 | 2 |
| 5999-00-136-9040 | C-1 | 5 | | | |

| PART NUMBER | FSCM | FIG. NO. | ITEM NO. | PART NUMBER | FSCM | FIG. NO. | ITEM NO. |
|---|---|---|---|---|---|---|---|
| CX-10734/G | 80063 | C-1 | 8 | RC-453/G | 80063 | C-1 | 2 |
| CX-11230/G(100 FEET) | 80063 | C-1 | 6 | SC-C-388423 | 80063 | C-1 | 5 |
| CX-11230/G(1/4 MILE) | 80063 | C-1 | 1 | SC-C-388423 | 80063 | C-1 | 5 |
| DR-15B | 80063 | C-1 | 3 | SC-C-388423 | 80063 | C-1 | 5 |
| RC-435/U | 80063 | C-1 | 7 | UG-1870/U | 80063 | C-1 | 4 |
| | | | | UG-1870/U | 80063 | C-1 | 4 |

# APPENDIX D

# EXPENDABLE SUPPLIES AND MATERIALS LIST

## Section I. INTRODUCTION

### D-1. Scope

This appendix lists expendable supplies and materials you will need to operate and maintain TWIN COAX CABLE (CX-11230/G) and TWIN COAX ADAPTER CABLE (CX-10734/G). These items are authorized to you by CTA 50-970, Expendable Items (except Medical, Class V, Repair Parts, and Heraldic items).

### D-2. Explanation of Columns

a. Column 1 - Item Number. No number appears in this column if the expendable item are referenced in the narrative instructions by military specification or other terms. If the item is identified in the narrative instructions by an item number, this number should appear in this column.

b. Column 2 - Level. This column identifies the lowest level of maintenance that requires the listed item.

O - Organizational Maintenance

H - General Support Maintenance

c. Column 3 - National Stock Number. This is the National Stock Number assigned to the item; use it to request or requisition the item.

d. Column 4 - Description. Indicates the Federal item name, and, if required, a description to identify the item. The last line for each item indicates the part number followed by the Federal Supply Code for Manufacturer (FSCM) in parenthesis, if applicable.

e. Column 5 - Unit of Measure (U/M). Indicates the measure used in performing the actual maintenance function. This measure is expressed by a two-character alphabetical abbreviation (e.g., ea, in, pr). If the unit of measure differs from the unit of issue, requisition the lowest unit of issue that will satisfy your requirements.

SECTION II. EXPANDABLE SUPPLIES AND MATERIALS LIST

| (1) ITEM NO. | (2) LEVEL | (3) NATIONAL STOCK NUMBER | (4) DESCRIPTION<br>PART NUMBER AND FSCM<br>PART NO. AND FSCM | (5) UNIT OF MEAS |
|---|---|---|---|---|
| | H | 8040-00-843-0802 | SILICONE COMPOUND, SELF SPREADALE, THIXOTROPIC PASTE<br>MIL-A-46106A (96717) | OZ |
| | H | 8550-00-880-7616 | SILICONE COMPOUND<br>DC-4 (71984) | OZ |
| | O,H | 8040-01-046-8902 | LOCTITE ADHESIVE<br>26231 (05872) | OZ |

RANK _____ MOS _____ NO. OF MONTHS IN THAT JOB. _____

To do our job better, we need to know what you think of this new TM. Your answers to these questions will help us. We're very interested in what you have to say.

Please read the questions carefully before marking the box which most clearly corresponds to your opinion. After completion remove this page and drop in post box.

1. Is this TM easier to read than the old TM?

   Yes ☐ No ☐

2. Does the use of color make the manual easier to use or would black and white do the job just as well? I prefer:

   Black & white ☐ Color ☐

3. Do the illustrations help you understand the written information?

   Yes ☐ No ☐

4. Are there any illustrations which are incorrect or need improvement?

   Yes ☐ No ☐

   If yes, which ones? _____

5. Are there any written portions which are incorrect or need improvement?

   Yes ☐ No ☐

   If yes, which ones? _____

6. Is the size of the publication convenient?

   Yes ☐ No ☐ The size I prefer is _____

7. How about the word-picture mix?

   Is it OK the way it is? Yes ☐ No ☐
   Would you like more ☐ pictures? less ☐ ?
   Would you like more ☐ writing? less ☐ ?

8. Did we leave anything out that your would like to have added to the manual?

   Yes ☐ No ☐ If yes, what? _____

_____

Thanks

FILL IN YOUR UNIT'S ADDRESS

FOLD BACK

DEPARTMENT OF THE ARMY

OFFICIAL BUSINESS

PENALTY FOR PRIVATE USE, $300

Commander
US Army Communications and Electronics
Materiel Readiness Command
ATTN: DRSEL-ME-P
Fort Monmouth, New Jersey 07703

FOLD BACK

TEAR ALONG DOTTED LINE

By Order of the Secretary of the Army:

BERNARD W. ROGERS
General, United States Army
Chief of Staff

Official:

J. C. PENNINGTON
Brigadier General, United States Army
The Adjutant General

DISTRIBUTION:

Active Army

USAINSCOM (2)
COE (1)
TSG (1)
USAARENBD (1)
DARCOM (1)
TRADOC (2)
OS Maj Comd (4)
TECOM (2)
USACC (4)
MDW (1)
Armies (2)
Corps (2)
HISA (Ft Monmouth)(26)
HQ 7th Sig Cored (2)
USACC-A (2)
Svc Colleges (1)
USASIGS (5)
USAADS (2)
USAFAS (2)
USAARMS (2)
USAIS (2)
USAES (2)
USAICS (3)
MAAG (1)
USARMIS (1)
USAERDAA (1)
USAERDAW (1)
USACC-EUR (2)
USACC-PAC (2)
USACC-SO (2)
Fort Carson (5)
Fort Gillem (10)
Fort Gordon (10)
Fort Huachuca (10)
Ft Richardson (CERCOM Ofc)(2)
USA Dep (1)
Sig Sec USA Dep (1)

Army Dep (1) except
LBAD (14)
SAAD (30)
TOAD (14)
SHAD (3)
Units org under fol TOE:
29-207 (2)
29-610 (2)
11-15 (1)
11-16 (1)
11-18 (1)
11-19 (1)
11-25 (1)
11-45 (1)
11-46 (1)
11-47 (1)
11-75 (1)
11-76 (1)
11-77 (1)
11-78 (1)
11-83 (1)
11-86 (1)
11-87 (1)
11-95 (1)
11-97 (1)
11-98 (1)
11-102 (1)
11-117 (1)
11-137 (1)
11-237 (1)
11-302 (1)
11-347 (1)
11-500(AA-AC)(1)
29-134 (1)
29-136 (1)

NG: State AG (3); Units- Same as Active **Army.**

USAR: None

For explanation of abbreviations used see AR 310-50

U.S. GOVERNMENT PRINTING OFFICE 1989 242-451 421/05933

# This fine document...

Was brought to you by me:

## Liberated Manuals -- free army and government manuals

Why do I do it? I am tired of sleazy CD-ROM sellers, who take publicly available information, slap “watermarks” and other junk on it, and sell it. Those masters of search engine manipulation make sure that their sites that sell free information, come up first in search engines. They did not create it... They did not even scan it... Why should they get your money? Why are not letting you give those free manuals to your friends?

I am setting this document FREE. This document was made by the US Government and is NOT protected by Copyright. Feel free to share, republish, sell and so on.

I am not asking you for donations, fees or handouts. If you can, please provide a link to liberatedmanuals.com, so that free manuals come up first in search engines:

<A HREF=http://www.liberatedmanuals.com/>Free Military and Government Manuals</A>

- Sincerely
  Igor Chudov
  http://igor.chudov.com/
- Chicago Machinery Movers