OPERATOR, ORGANIZATIONAL, AND DIRECT SUPPORT MAINTENANCE MANUAL INCLUDING REPAIR PARTS AND SPECIAL TOOLS LIST FOR KITCHEN, COMPANY LEVEL FIELD FEEDING (KCLFF) (NSN 7360-01-200-9828) EIC:YBN AND KITCHEN, COMPANY LEVEL FIELD FEEDING-ENHANCED (KCLFF-E) (NSN 7360-01-374-1980) EIC: YCH

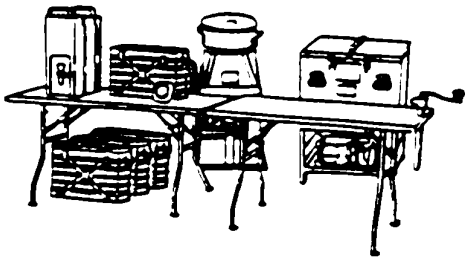

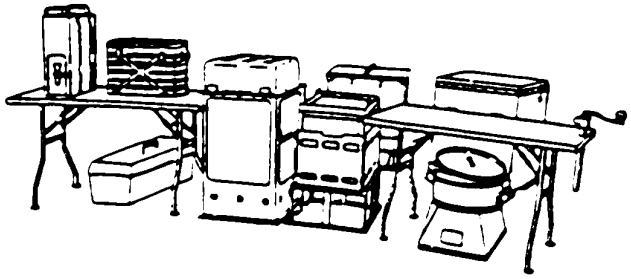

HEADQUARTERS DEPARTMENT OF THE ARMY

10 April 1987

WARNING

- Do not operate without proper ventilation to prevent accumulation of carbon monoxide, which is a colorless, poisonous gas. If the gas is present, ventilate immediately. If symptoms persist, move personnel to fresh air, keep warm, and do not permit physical exercise.

FOR ARTIFICIAL RESPIRATION, REFER TO FM 21-11

- Flammable liquids are used in the operation of the Kitchen, Company Level Field Feeding (KCLFF) and the Kitchen, Company Level Field Feeding -Enhanced (KCLFF-E).

DEATH

or severe injury may result from explosion or fire if personnel fail to observe the correct operating procedures for M2 burner units.

- Do not touch the Heater Tank Assembly, Griddle Assembly, Cooking Pot Cradle Assembly or Range Cabinet when M2 burner units are in use; serious bums may result; use heat protective gloves.

- The M2 Burner Units should be moved a minimum of 50 feet from the KCLFF, KCLFF-E and the fuel storage area prior to servicing.

- Establish a safe lighting area that is a minimum of 50 feet from the refueling, fuel storage and cooking areas.

- Do not touch KCLFF or KCLFF-E equipment metal parts when temperatures are below freezing without protective gloves; injury may result.

- Handle tray pack lids and trash bags containing tray pack lids carefully. Sharp edges on opened lids may cause serious cuts.

- Discard tray packs having any of the following defects:

1. Leaks where tray packs show any evidence of product on the exterior that may come from a pinhole, fracture, or Incomplete seal.

2. Leaks where tray packs show any evidence of product on the exterior that may come from a pinhole, fracture, or incomplete seal.

3. Dents that are so severe as to cause leakage or materially affect usability.

4. Swollen or outwardly distended tray lids bulging from internal pressure or swells caused by physical damage such as dents or overheating.

5. Buckles or bends in the top and extending into the end seam of the tray pack.

- Milk and milk products must not be placed in the liquid dispenser.

- Do not use flammable material as a base for the KCLFF or KCLFF-E. Fire may cause injury to personnel or damage to equipment

- Allow M2 burner units and lantern to cool before releasing air pressure from fuel tanks. Do not smoke and make sure there is no open flame in the vicinity. Fuel fumes are explosive and highly flammable.

- Extreme heat will cause tank pressure to increase because of fuel expansion. Make sure you start with prescribed pressure LAW TM 10-7360-204-13&P.

- Dry cleaning solvent A-A-711 TY1 (item 3, Appendix F) used to dean parts is potentially dangerous to personnel and property. Avoid repeated and prolonged skin contact Do not use near open flame of excessive heat. Flash point solvent is 100 to 138'F (38 to 59'C).

CHANGE NO. 4

HEADQUARTERS, DEPARTMENT OF THE ARMY
WASHINGTON, DC, 31 AUGUST 2005

TECHNICAL MANUAL

OPERATOR, ORGANIZATIONAL, AND DIRECT SUPPORT MAINTENANCE MANUAL INCLUDING REPAIR PARTS AND SPECIAL TOOLS LIST FOR KITCHEN, COMPANY LEVEL FIELD FEEDING (KCLFF) (NSN 7360-01-200-9828) EIC: YBN AND KITCHEN, COMPANY LEVEL FIELD FEEDING-ENHANCED (KCLFF-E) (NSN 7360-01-374-1980) EIC: YCH

DISTRIBUTION STATEMENT A: - Approved for public release; distribution is unlimited.

TM 10-7360-209-13&P, 10 April 1987, is updated as follows:

1. File this sheet in front of the manual for reference.

2. This change implements Army Maintenance Transformation and changes the Maintenance Allocation Chart (MAC) to support Field and Sustainment Maintenance.

3. New or updated change information is indicated by a vertical bar in the outer margin of the page.

4. Remove old pages and insert new pages as indicated below:

Remove Pages	**Insert Pages**
	A/(B Blank)
B-1 – B-6	B-1 – B-7/(B-8 Blank)
	2028 Electronic Instructions/Back
2028 Sample	2028 Sample Front/Back
2028 Front/Envelope	2028 Front/Back

By Order of the Secretary of the Army:

PETER J. SCHOOMAKER
General, United States Army
Chief of Staff

Official:

SANDRA R. RILEY
Administrative Assistant to the
Secretary of the Army
0516414

Distribution: To be distributed in accordance with initial distribution number (IDN) 253991 requirements for TM 10-7360-209-13&P.

CHANGE

NO.3

HEADQUARTERS
DEPARTMENT OF THE ARMY
WASHINGTON, D.C.,13 June 1996

Operator, Organizational, and Direct
Support Maintenance Manual Including
Reparir Parts and Special Tools List
For
KITCHEN, COMPANY LEVEL FIELD FEEDING (KCLFF)
NSN 7360-01-200-9828 EIC: YBN
AND
V,KITCHEN, COMPANY LEVEL FIELD FEEDING -ENHANCED (KCLFF-E)
NSN 7360-01-347-1980 EIC: YCH

DISTRIBUTION STATEMENT A: Approved for public release; distribution is unlimited

TM 10-7360-209-13&P, 10 April 1987, is changed as follows:

1. Title is changed as shown above.

2. Remove and insert pages as indicated below. New or changed text material is indicated by a vertical bar in the margin. An illustration change is indicated by a miniature pointing hand.

Remove pages	Insert pages
a and b	a and b
i and ii	i and ii
1-1 and 1-2	1-1 and 1-2
- - - - -	1-2.1/(1-2.2 Blank)
1-3 and 1-4	1-3 and 1-4
- - - - -	1-4.1 and 1-4.2
1-5/(1-6 Blank)	1-5 and 1-6
2-1 through 2-6	2-1 through 2-6
- - - - -	2-6.1 and 2-6.2
2-7 and 2-8	2-7 and 2-8
2-11 through 2-14	2-11 through 2-24
3-1 through 3-3/(3-4 Blank)	3-1 through 3-5/(3-6 Blank)
4-1 through 4-4	4-1 through 4-4
- - - - -	4-4.1/(4-4.2 Blank)
4-5 through 4-8	4-5 through 4-8
4-11 through 4-151(4-16 Blank)	4-11 through 4-15/(4-16 Blank)
5-1 through 5-3/(5-4 Blank)	5-1 through 5-3/(5-4 Blank)
A-1 and A-2	A-1 and A-2

Remove pages	Insert pages
B1 through B-4	B-1 through B-4
- - - - -	B-4.1/(B-4.2 Blank)
B-5 and B-6	B-5 and B-6
C-1 and C-2	C-1 and C-2
C-7 and C-8	C-7 and C-8
C-10 through C-25/(C-26 Blank)	C-10 through C-40
D-1 through -6	D-1 through D-8
F-1 and F-2	F-1 and F-2
- - - - -	G-1 and G-2
Index 1 through Index 4	Index 1 through Index 4
Cover	Cover

3. Retain this sheet in front of manual for reference purposes.

By Order of the Secretary of the Army:

DENNIS J. REIMER
General, United States Army
Chief of Staff

Official:

Administrative Assistant to the
Secretary of the Army
02141

DISTRIBUTION:

To be distributed in accordance with DA Form 12-25E, block no. 3991, requirements for TM 10-7360-209-13&P.

CHANGE

NO. 2

HEADQUARTERS,
DEPARTMENT OF THE ARMY
WASHINGTON, D. C., 22 May 1991

Operator, Organizational, and Direct
Support Maintenance Manual Including
Repair Parts and Special Tools List
For
KITCHEN, COMPANY LEVEL FIELD FEEDING (KCLFF)
NSN 7360+01-200-9828

Approved for public release; distribution is unlimited

TM 10-7360-209-13&P, 10 April 1987, is changed as follows:

1. Remove and insert pages as indicated below. New or changed text material is indicated by a vertical bar in the margin. An illustration change is indicated by a miniature pointing hand.

Remove pages	Insert pages
4-7 and 4-8	4-7 and 4-6
C-10 through C-14	C-10 through C-14
C-17 through C-25/(C-26 blank)	C-17 through C-25/(C-26 blank)
D-5 and D-6	D-5 and D-6

2. Retain this sheet in front of manual for reference purposes.

By Order of the Secretary of the Army:

CARL E. VUONO
General, United States Army
Chief of Staff

Official:

THOMAS F. SIKORA
Brigadier General, United States Army
The Adjutant General

DISTRIBUTION:

To be distributed in accordance with DA Form 12-25E, (qty rtr block no. 3991)

CHANGE NO.1

HEADQUARTERS
DEPARTMENT OF THE ARMY
WASHINGTON, D.C., 25 April 1989

Operator, Organizational, and Direct
Support Maintenance Manual Including
Repair Parts and Special Tools List
For
KITCHEN, COMPANY LEVEL FIELD FEEDING (KCLFF)
NSN 7360-01-200-9828

TM 10-7360-209-13&P, 10 April 1987, is changed as follows:

1. Remove and insert pages as indicated below. New or changed text material is indicated by a vertical bar in the margin. An illustration change is indicated by a miniature pointing hand.

Remove pages	Insert pages
t and if	i and ii
1-1 through 1-5/1-6	1-1 through 1-5/1-6
2-1 through 2-12	2-1 through 2-12
3-1 through 3-3/3-4	3-1 through 3-3/3-4
4-3 through 4-8	4-3 through 4-8
4-11 through 4-14	4-11 through 4-14
B-3 and B-4	B-3 and B-4
C-1 through C-8	C-1 through C-8
C-9 and C-10	C-10
C-11 through C-22	C-11 through C-22
C-23 and C-24	C-23 and C-24
- - - -	C-25/C-26
D-3 through D-6	D-3 through D-6
Index 1 and Index 2	Index 1 and Index 2

2. Retain this sheet in front of manual for reference purposes.

By Order of the Secretary of the Army:

CARLE.VUONO
General United States Army
Chief of Staff

Official:

WILLIAM J. MEEHAN, II
Brigadier General United States Army
The Adjutant General

DISTRIBUTION:
To be distributed in accordance with DA Form 12-25A, Operator, Unit, Direct Support and General Support Maintenance requirements for Kitchen, Field, Mobile, Trailer Mounted (MKT-75).

INSERT LATEST CHANGED PAGES. DESTROY SUPERSEDED PAGES.

LIST OF EFFECTIVE PAGES

NOTE: The portion of text affected by the changes is indicated by a vertical line in the outer margins of the page. Changes to illustrations are indicated by shaded or screened areas, or by miniature pointing hands. Zero in the "Change No." column indicates an original page.

Dates of issue for original and changed pages are:

Original …0...	10 April 1987	Change…3...	13 June 1996
Change …1...	25 April 1989	Change...4…	31 August 2005
Change …2...	22 May 1991		

TOTAL NUMBER OF PAGES IN THIS PUBLICATION IS 160, CONSISTING OF THE FOLLOWING:

Page No.	Change No.	Page No.	Change No.
Title	0	D-1 – D-8	3
a – b	3	E-1/(E-2 Blank)	0
i – ii	3	F-1 – F-2	3
1-1 – 1-6	3	G-1 – G-2	3
2-1 – 2-8	3	INDEX-1 – INDEX-4	3
2-9	1	Back Cover	0
2-10	0		
2-11 – 2-24	3		
3-1 – 3-5/(3-6 Blank)	3		
4-1 – 4-2	3		
4-3	1		
4-4 – 4-7	3		
4-8	2		
4-9 – 4-10	0		
4-11 – 4-15/(4-16 Blank)	3		
5-1 – 5-3/(5-4 Blank)	0		
A-1 – A-2	3		
B-1 – B-7/(B-8 Blank)	4		
C-1	3		
C-2	1		
C-3	3		
C-4 – C-7	1		
C-8 – C-13	3		
C-14	0		
C-15	3		
C-16	0		
C-17 – C-19	3		
C-20	0		
C-21 – C-40	3		

TECHNICAL MANUAL

NO. 10-7360-209-13&P

HEADQUARTERS
DEPARTMENT OF THE ARMY
WASHINGTON, D.C., 10 April 1987

OPERATOR'S, OGANIZATIONAL, AND DIRECT SUPPORT MAINTENANCE INCLUDING REPAIR PARTS AND SPECIAL TOOLS UST FOR KITCHEN, COMPANY LEVEL FIELD FEEDING (KCLFF) (NSN 7360-01-200-9828) EIC: YBN AND KITCHEN, COMPANY LEVEL FIELD FEEDING-ENHANCED (KCLFF-E) (NSN 7360-01-374-1980) EJC: YCH

REPORTING ERRORS AND RECOMMENDING IMPROVEMENTS

You can help improve this manual. If you find any mistakes, or If you know of a way to improve these procedures, please let us know Mail your letter or DA Form 2028 (Recommended Changes to Publications and Blank Forms), or DA Form 2028-2 located in the back of this manual directly to: Commander, US Army Aviaton and Troop Command, ATTN AMSAT-I-MP, 4300 Goodfellow Blvd., St. Louis, MO 63120-1798. A reply will be furnished directly to you.

DISTRIBUTION STATEMENT A: Approved for public release; distribution is unlimited

TABLE OF CONTENTS

TABLE OF CONTENTS

CHAPTER 1

INTRODUCTION

Section I. GENERAL INFORMATION

1-1. SCOPE. This manual covers operation of the Kitchen, Company Level Field Feeding, Type I (KCLFF) NSN 7360-01-200-9828, and Kitchen, Company Level Field Feeding - Enhanced, Type II (KCLFF-E) NSN 7360-01-374-1980, as well as organizational and direct support maintenance procedures. The KCLFF and KCLFF-E includes equipment required by 92G Military Occupational Speciality (MOS) personnel responsible for the feeding of highly mobile Light Infantry Division troop units.

1-2. MAINTENANCE FORMS, RECORDS, AND REPORTS.

Reports of Maintenance and Unsatisfactory Equipment. Department of the Army forms and procedures used for equipment maintenance will have those prescribed by DA PAM 738-750, the Army Maintenance Management System.

1-3. HAND RECEIPT (-HR) MANUALS. This manual has a companion document with a TM number followed by '-HR' which stands for Hand Receipt The TM 10-7360-209-13&P-HR consists of preprinted hand receipts (DA Form 2062) that list end item related equipment (i.e., COEI, Bll, and AAL) you must account for. As an aid to property accountability, additional -HR manuals may be requisitioned from the following source:

Commander
U.S. Army Publications Center
ATTN: AGLD-OD
2800 Eastern Blvd
Baltimore, MD 21220-2896

1-4. REPORTING EQUIPMENT IMPROVEMENT. If your KCLFF or KCLFF-E need Improvement, let us know. Send us a QDR. You, the user, are the only one who can tell us what you don't like about your equipment Let us know why you don't like the design or performance. Put It on an SF 368 (Quality Deficiency Report). Mail t to Commander, U.S. Army Aviation Troop Support Command, ATTN: AMSAT-I-MDO, 4300 Goodfellow Boulevard, St. Louis, MO 63120-1798. We'll send you a reply.

1-5. DESTRUCTION OF MATERIEL Destruction of Army materiel to prevent enemy use shall be in accordance with TM 750-244-3.

1-6. PREPARATION FOR STORAGE OR SHIPMENT. Prepare the equipment for storage or shipment as described in paragraph 415.

1-7. NOMENCLATURE/COMMON NAME CROSS-REFERENCE UST. A cross-reference list of the common names used throughout this manual to the official nomenclature is provided below:

1-8. EQUIPMENT CHARACTERISTICS, CAPABILITIES AND FEATURES (KCLFF-E). The KCLFF-E kitchen has all the equipment and capabilities of the KCLFF kitchen with the additional capability to prepare limited Type A (perishable and semi-perishable items) and limited Type B (semi-perishable items), T-rations and beverages in the field, in basic hot and cold climatic conditions with or without shelter from the environment. The kitchen is designed for support of company-size units or Light Infantry Divisions. KCLFF-E insulated containers will be used to hold precooked hot or prechilled cold prepared items to dispersed squad-size units or to hold pre-cooked items for mass feeding. All other characteristics, capabilities and features are the same as for the KCLFF.

a. Characteristics.

(1) Provides capability of cooking, baking, frying, roasting, and grilling food.

(2) Transports ice and cold food.

(3) Provides flexibility of serving precooked and field cooked meals.

b. Capabilities And Features.

(1) Utilizing the range outfit, griddle assembly and ice chest, enables one 92G MOS to prepare limited Type A and Type B meals for up to 50 persons.

(2) Uses same M2 burner units as KCLFF.

(3) Requires no special sanitation or preservation procedures other than used for KCLFF.

(4) May be used to heat T-rations and transport heated rations to the field.

(5) The additional insulated food containers provide greater storage and transport capabilities needed to deliver and prepare A and B-rations for the KCLFF-E.

1-9. LOCATION AND DESCRIPTION OF MAJOR COMPONENTS.

a. General. KCLFF major components include the Heater Tank Assembly with M2 burner unit Cooking Pot Cradle Assembly with M2 burner unit; Table Assemblies; Dispenser, Liquid, Insulated (5 gal); and Food Container Insulated. The KCLFF-E includes all of the major components of the KCLFF plus the Range Outfit the Griddle Assembly, the Ice Chest, the Accessory Outfit and twelve additional Food Containers, Insulated.

b. Identification Plates and Stencils. The Heater Tank Assembly has a plate containing abbreviated operating instructions, and two warning signs. Two warning signs are also attached to the shroud of the Cooking Pot Cradle Assembly. No other identification plates or stencils are attached to or printed on KCLFF major components. A warning sign is attached to the door of the Range Cabinet in the KCLFF-E.

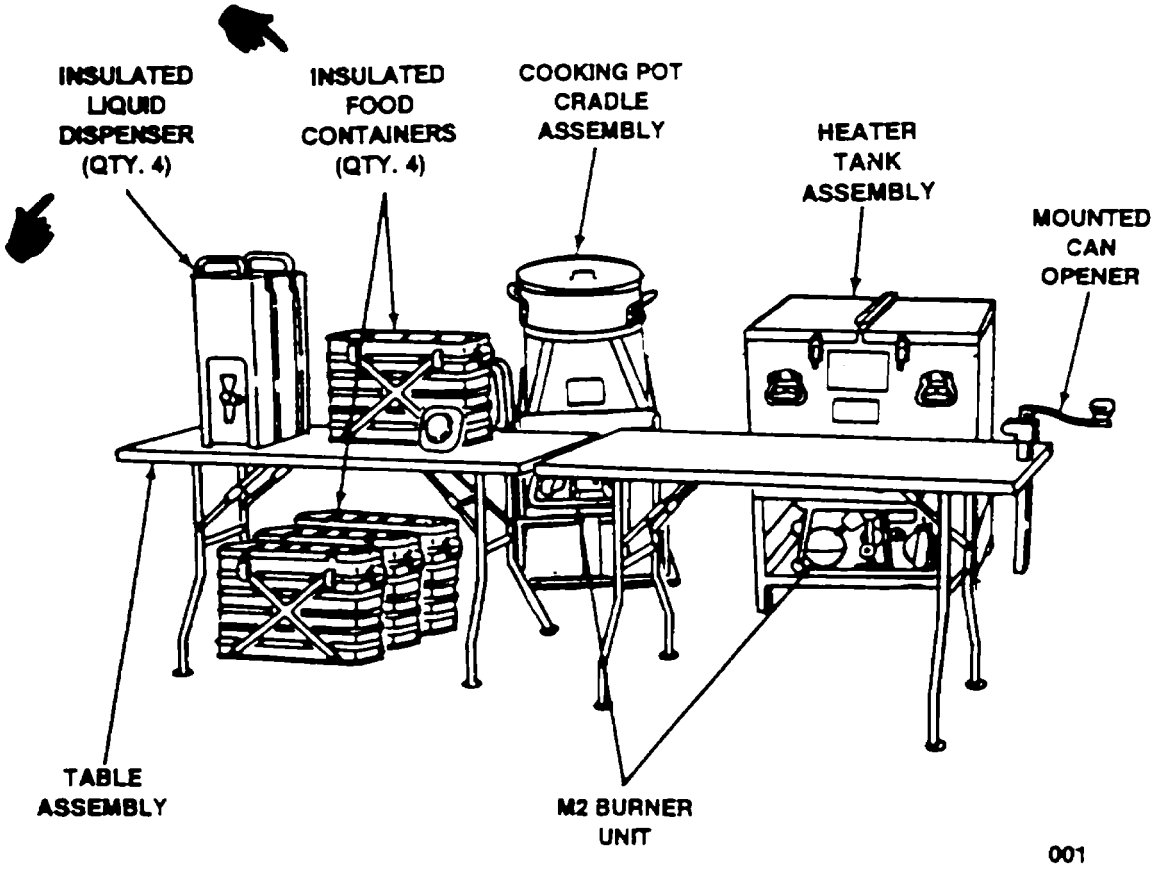

Figure 1-1. Kitchen, Company Field Feeding (KCLFF)

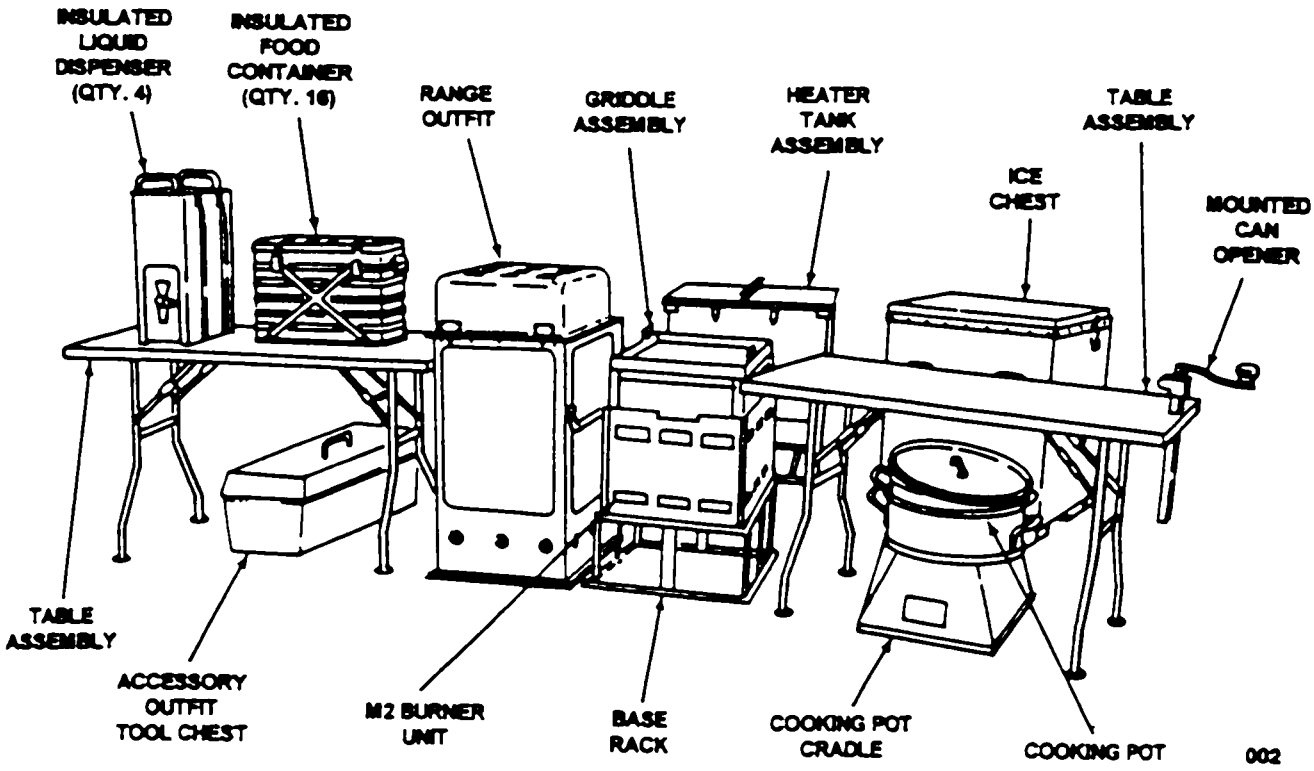

C

Figure 1-1.1 Kitchen, Company Level, Field Feeding (KCLF-E)

1-9.1. DIFFERENCES BETWEEN MODELS. The KCLFF-E increases the food preparation capability of the (KCLFF from preparing just T-rations to preparing A, B and T-rations, which are all the operational group rations.

1-10. EQUIPMENT DATA.

a. Capabilities.

(1) Heater Tank Assembly with M2 burner unit Capable of heating 200 T-ration meals to at least 165°F (74°C) within 2-1/2 hours after arrival on site.

(2) Cooking Pot Cradle Assembly with M2 burner unit Capable of heating water and beverages to 212°F (100°C).

(3) Dispenser, Liquid, Insulated (5 gal) and Food Container. Insulated. Capable of maintaining heated food and beverages at temperatures of no less than 140°F (60°C) for up to 4 hours in temperatures as low as -25°F (-32°C).

(4) Range Outfit (KCLFF-E). Capable of cooking, baking, roasting and heating food for 50 men.

(5) Ice Chest (KCLFF-E). Capable of storing up to 200 lbs of ice. Will keep food cold for 8 hours in ambient temperatures up to 1105F when packed with 80 lbs of ice.

(6) Griddle Assembly (KCLFF-E). Capable of grilling and frying food.

(7) Food Container, Insulated (KCLFF-E). Capable of holding three aluminum inserts to keep food hot or cold. Each insert has a capacity of 5-2/3 quarts (5-1/3 liters).

b. Fuel Consumption.

The M2 burner unit bums fuel at the rate of 0.5 gallons (1.9 liters) per hour.

c. Specifications.

Dimensions and weights for KCLFF and KCLFF-E equipment and accessories are listed in Table 1-1.

Table 1-1. KCLFF and KCLFF-E Components, Dimensions, and Weights.

	Height		Width		Depth		Weight	
Component	in.	cm	in.	an	in.	cm	lb.	kg
Heater Tank Assembly	37.0	94.0	26.6	67.6	26.6	67.6	856.0	38.6
Cooking Pot Cradle Assembly	18.0	45.7	23.5	59.7	24.8	63.0	42.0	19.1
M2 Burner Unit	10.0	25.4	23.0	58.4	19.0	48.3	42.0	19.1
Cooking Pot (10 gal)	12.0	30.5	17.8	45.1	22.5	57.2	12.5	5.7
Cooking Pot (15 gal)	16.0	40.6	17.8	45.1	22.5	57.1	16.0	7.3
Work Table	30.0	76.2	53.0	134.6	26.0	66.0	54.0	24.5
Liquid Dispenser (5 gal)	18.0	45.7	16.5	41.9	9.0	22.9	15.0	6.8
Food Container, Insul.	20.8	52.7	26.3	66.7	16.3	41.3	37.0	16.8
T-ration (Tray Pack)	2.5	6.4	10.2	25.9	12.0	30.4	6.6	3.0
Range Cabinet	42.0	106.7	24.0	61.0	27.0	68.6	114.0	51.8
Ice Chest	36.0	91.5	28.0	71.1	24.0	61.0	114.0	51.8
Griddle Assy	3.5	8.9	18.0	45.7	21.0	53.3	12.0	5.4
Griddle Base	7.5	19.1	19.0	48.3	22.0	55.9	7.5	3.4
Food Container, Insulated (w/inserts)	16.0	40.7	20.0	50.8	11.0	27.9	18.5	8.4
Accessory Kit, Field Range with Baking Racks								

Section III. TECHNICAL PRINCIPLES OF OPERATION

1-11. HEATER TANK ASSEMBLY. This tank is filled with twenty gallons (75.7 liters) water and 20 T-ration trays. The M2 burner heats the water which brings the T-rations to a consumption temperature of 165"F (74'C).

1-12. COOKING POT CRADLE ASSEMBLY. Hot beverages are prepared in this unit. Another M2 burner provides the heat needed for the water.

1-13. UFTER, TRAY PACK. To ensure operating personnel are not burned when extracting T-rations from the heater tank, a lifter is provided.

1-14. UFTER, TRAY PACK, SERVING. Once the T-ration has been removed, it is moved to the work table by a serving lifter.

1-15. UFTER, SERVICING, NUMBER TEN CAN. To ensure personnel are not burned when extracting hot Number Ten Cans from the Heater Tank to the opening table and to the serving table a Number Ten Can Lifter is provided.

1-16. TABLE ASSEMBLY. Two tables are provided with KCLFF One work table is used to mount the can opener to open T-rations. The other is used for serving.

1-17. M2 BURNER UNITS. The M2 burner units use gasoline that is pressurized by a hand pump. The pressurized fuel is heated by a preheater to turn the liquid into a vapor. The vapor is ignited to produce heat under the Cooking Pot in the Cooking Pot Cradle Assembly and the Heater Tank Assembly. (Beverages are directly heated in the cooking pot, while 20 gallons (75.7 liters) of water are heated in the heater tank to bring the Tray-Pack Foods to a consumption temperature of 165°F (740C).

1-18. FOOD CONTAINER, INSULATED AND LIQUID DISPENSERS. Both the food containers and Liquid Dispensers have been designed to maintain consumption temperatures of 140OF (60°C) for up to 4 hours. Food and beverage are provided to a remote unit of 24 personnel in these units.

1-19. TRAY-PACK FOODS. Tray-pack foods are hermetically-sealed, half-size steam-table containers in which about 105 ounces (3 kg) of food (10 to 20 servings) have been thermally processed. The tray-pack foods can be transported and stored without refrigeration until needed. Tray-pack foods have a shelf life of at least 3 years when stored in a cool, dry area at 70°F (230C). The contents can be heated in and served from the tray-packs. Due to the possibility of flavor loss of the food or damage to the tray-packs, tray-packs should be reheated only twice.

1-20. BAG, WATER, STERILIZING. In field operations, water bags are used to store and dispense treated water. A water-purification bag should be set up so that It has good drainage and overhead protection. The bag may be suspended from the limb of a tree or pole mounted horizontally, or it may be supported by poles tied at the top to form a tripod. A small sump pit will keep water from puddling beneath the bag.

1-21. RANGE OUTFIT. A portable range consisting of a range cabinet with a M2 Burner Unit as a heat source for preparing food in the field or In an indoor area when adequate ventilation is provided. The Range Outfit includes pots, pans, knives, forks, spoons and other cooking utensils and equipment 1-22. ICE CHEST. Foam insulation in walls and lid of ice chest retains temperatures below 500F when food is packed with 80 lbs of ice. Up to 8 cubic feet of food storage is provided.

1-22. ICE CHEST. Foam insulation in walls and lid of ice chest retains temperatures below 50° F when food is packed with 80 lbs of ice. Up to 8 cubic feet of food storage is provided.

1-23. GRIDDLE ASSEMBLY. One-quarter inch thick aluminum griddle distributes heat uniformly so that entire surface is usable for grilling or frying.

1-24. ACCESSORY OUTFIT, FIELD RANGE WITH BAKING RACKS. Contains tools and accessories required to setup and maintain the Range Outfit including baling racks.

CHAPTER 2
OPERATING INSTRUCTIONS

Section I. DESCRIPTION AND USE OF OPERATOR'S CONTROLS AND INDICATORS

2-1. GENERAL. KCLFF equipment has been designed for use In forward combat areas and has few moving parts, with the exception of the M2 burner unit, which Is the heat source for the Heater Tank Assembly and the Cooking Pot Cradle Assembly. The Heater Tank Assembly; Cooking Pot Cradle Assembly; Food Container, Insulated; and Dispenser, Liquid, Insulated (5 gal) have no electrical or mechanical controls and indicators. The M2 burner unit also supplies heat for the KCLFF-E Range Outfit and Griddle Assembly. The KCLFF-E Range Outfit, Griddle Assembly, Ice Chest and Food Containers have no electrical or mechanical controls and indicators.

2-2. CONTROLS AND INDICATORS.

M2 Burner Unit. Reference TM 10-7360-204-13&P.

Section II. PREVENTIVE MAINTENANCE CHECKS AND SERVICES (PMCS)

2-3. PMCS INTRODUCTION. Preventive maintenance checks and services are to be done to be sure the equipment is ready to use at all times. PMCS helps you find and fix defects before the equipment is damaged or fails.

a. General.

(1) Before you operate, always keep In mind the CAUTIONS and WARNINGS. Perform your before (B) PMCS.

(2) While you operate, always keep In mind the CAUTIONS and WARNINGS. Perform your during (D) PMCS.

(3) After you operate, be sure to perform your after (A) PMCS.

(4) If your equipment fails to operate, troubleshoot with proper equipment. Report any deficiencies using the proper forms. See DA PAM 738750, The Army Maintenance Management System (TAMMS).

b. PMCS Procedures.

(1) The purpose of the PMCS table is to indicate the order In which checks are to be done, as well as to Indicate when they are to be done.

(2) The first column of the table provides the Item number (order) for accomplishment of checks and services. Column two (interval) provides when they are to be done. Applicable intervals are before (B), during (D), and after (A) use.

(3) The "Equipment is Not Ready/Available If" column contains the criteria that will cause the equipment to be classified as not ready/available because of inability to perform Its primary combat mission.

b. PMCS Procedures (Continued)

(4) Report deficiencies in accordance with DA PAM 738750. Correct deficiencies in accordance with the "Procedures/Check for and have Repaired or Adjusted as Necessary" column and troubleshooting procedures contained in Table 3-1.

(5) Perform PMCS on the M2 Burner Units and the Range Outfit and Accessory Outfit LAW TM 10-7360-204-1 3&P.

NOTE

Use in Table 2-2 item number column to get the numbers for the TM Item Number column of DA Form 2404, Equipment Inspection and Maintenance Worksheet In recording results of your PMCS.

Table 2-2. Operator Preventive Maintenance Checks and Services

B-Before D-During A-After

Item No.	Interval B	Interval D	Interval A	Item to be Inspected	Procedures Check for and have repaired or adjusted as necessary	Equipment is Not Ready/Available If:
1	•			Heater Tank Assembly 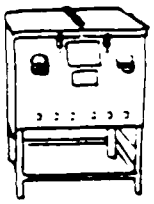	Inspect Heater Tank Assembly for broken, loose or missing hardware, bent members, broken welds and leaking drain valve. Check that warning and inspection plates are properly mounted and legible. Clean the Heater Tank Assembly thoroughly using soap and warm water. Rinse well with clean water and air dry.	Heater Tank Assembly leaks water. Warning plate is missing or illegible.
2	•			Cooking Pot Cradle Assembly 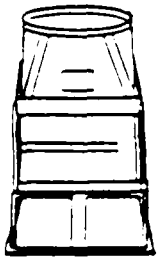	Inspect Cooking Pot Cradle Assembly, for bent parts or broken welds. Check that warning plates are properly mounted and legible. Clean Cooking Pot Cradle Assembly thoroughly using soap and warm water. Rinse well with clean water and air dry.	

Table 2-2. Operator Preventive Maintenance Checks and Services (Cont'd)

B-Before D-During A-After

Item No.	Interval B	Interval D	Interval A	Item to be Inspected	Procedures Check for and have repaired or adjusted as necessary	Equipment is Not Ready/Available If:
3	•			Table Assembly 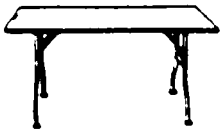	Check for broken welds, loose or missing hardware. Check to insure table is securely assembled and level. Check to be sure that the leg braces are securely positioned.	
4	•			Dispenser Liquid 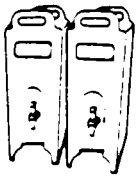	Check for leaks, damage to gasket or latches. Disassemble and clean the insulated liquid dispenser and faucet assembly using soapy warm water and air dry.	
5	•		•	Food Container, Insulated 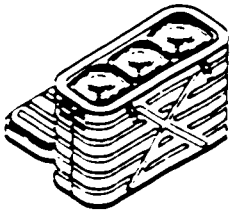	Check for damage to gasket and latches. Never immerse the Food Container in water. Clean the container and gasket thoroughly before and after use. Using soap and hot water, rinse well with clean boiling water. Install container gasket wet with flat side down. Allow the gasket and container to air dry.	
6	•		•	Inserts, Food 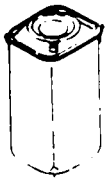	Check for damaged covers. Check for damaged or missing seals. Clean the inserts and cover seals before and after use with soap and hot water. Rinse in clean boiling water. Place the wet seals on the covers. this allows them to air dry in place so they won't stretch, shrink or loose shape.	

Table 2-2. Operator Preventive Maintenance Checks and Services (Cont'd)

B-Before D-During A-After

Item No.	Interval B	Interval D	Interval A	Item to be Inspected	Procedures Check for and have repaired or adjusted as necessary	Equipment is Not Ready/Available If:
7	•			Tray Packs	Inspect tray packs for defects.	Tray packs show evidence of leaks or rust; tray pack is dented, swollen, or there are buckles or bends in the top extending into an end seam.
8	•			Fire Extinguisher	Locate extinguisher; check to ensure charge reading is in the green and that the seal is not broken.	Fire extinguisher is missing or charge reading in the red
9	•			First Aid Kit	Locate first aid kit. Be sure kit is complete and components are serviceable.	Kit is missing, in-complete, or items kit-life has expired.
10	•			Gasoline Cans	Inspect for leaks and dents.	
11	•			Ice Chest	Inspect ice chest for broken, loose or missing hardware and floor board and for leaking water. Clean ice chest and gaskets thoroughly using soap and warm water. Rinse well with clean water and air dry.	
12	•			Griddle Assembly	Inspect for corrosion and for broken welds in base. Check for badly scratched or worn off (over 50 %) anodized coating on frying side of griddle. Clean griddle assembly and base thoroughly using soap and warm water. Rinse well and air dry.	

Section III. OPERATION UNDER USUAL CONDITIONS

2-4. GENERAL The instructions in this section are for personnel who operate KCLFF and KCLFF-E Operating and servicing instructions for the M2 Burner Unit, Rnage Outfit and Accessory Outfit are contained in TM 10-7360-204-13&P.

2-5. ASSEMBLY AND PREPARATION FOR USE.

a. Basic Configuration. Select a level site that is clear of obstacles for about 600 square feet (56 square meters) for setup of the KCLFF or KCLFF-E equipment as follows:

WARNING

Do not use flammable material as base ffor the KCLFF or KCLFF-E. Fire may cause injury to personnel or damage equipment.

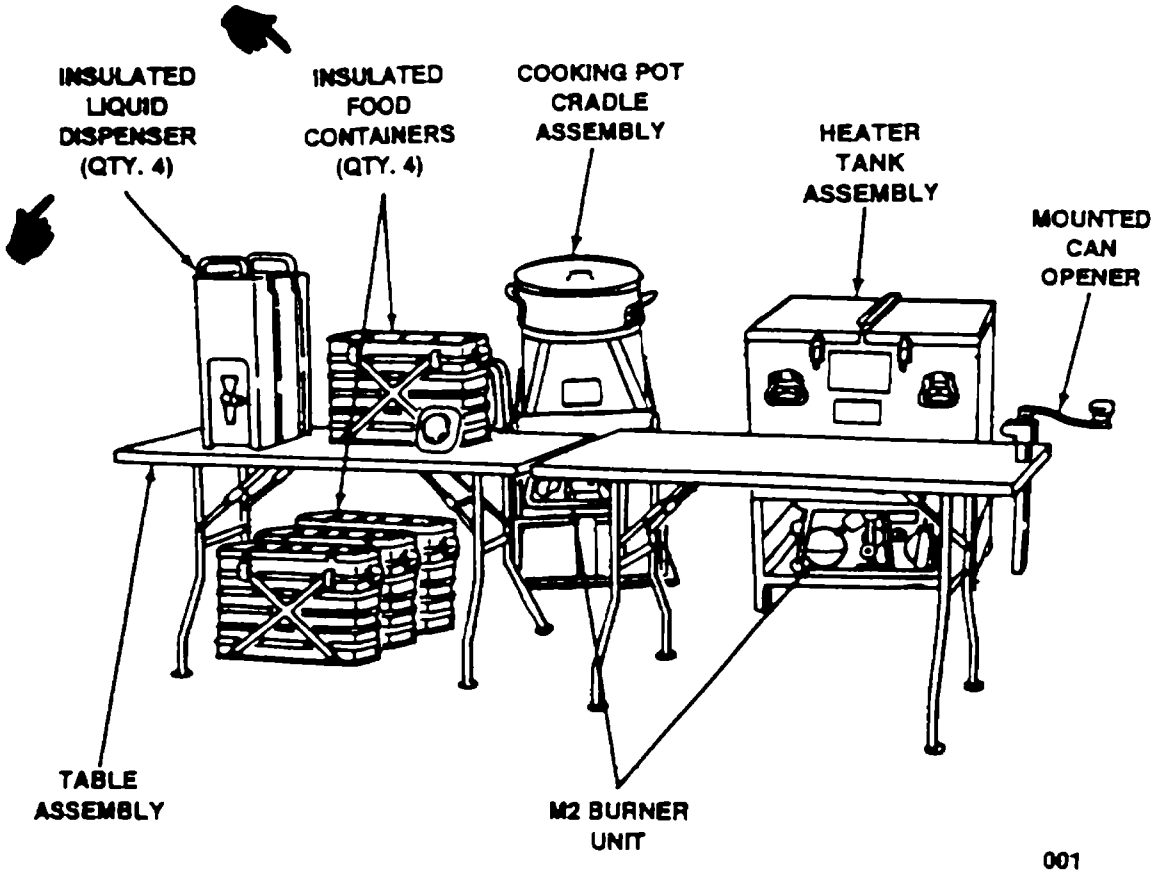

Figure 2-1. KCLFF Layout for Operation.

2-5. ASSEMBLY AND PREPARATION FOR USE (Continued).

(1) Gas cans (2).

(2) Table Assembly (2).

(3) Water cans (8).C

(4) Food Container, Insulated (KCLFF) (4).

(5) Dispensers, Liquid, Insulated (5 gal) (4).

(6) Cooking Pot Cradle Assembly (1) and M2 Burner Unit (1).

(7) Heater Tank Assembly (1) and M2 Burner Unit (1).

(8) Tray-Packs as required.

(9) Range Outfit (1) containing cabinet components and M2 Burner Unit (1) (KCLFF-E).

(10) Griddle Assembly (KCLFF-E) (1).

(11) Ice Chest (KCLFF-E) (1).

(12) Food Containers, Insulated (KCLFF-E) (16) Total.

(13) Accessory Outfit (KCLFFE-E) (1).

WARNING

Store gasoline cans at least 50 feet (15.3 meters) from the KCLFF and KCLFF-EC site.

b. Setup (KCLFF). Position major KCLFF components as shown and unpack as follows:

(1) Remove accessories from Heater Tank Assembly, retaining packing materials for future use.

(2) Open Tray-Pack shipping case and remove Tray-Packs as required.

(3) Utensils Identified In Appendix D by usable on code for the KCLFF should be placed on a Table Assembly, while the fire extinguisher and the first aid kit should be placed near the Heater Tank Assembly and the Cooking Pot Cradle Assembly. Prepare M2 burner units for use in accordance with TM 10-7360-204-13&P.

(4) Assemble the Heater Tank Assembly by inserting the M2 burner unit in the burner rack.

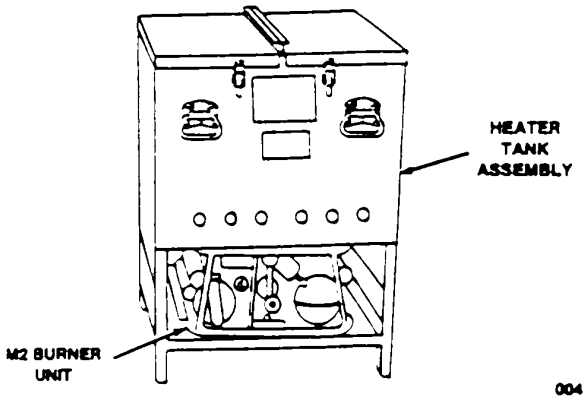

2-5. ASSEMBLY AND PREPARATION FOR USE (Continued).

(5) Place Cooking Pot in Cooking Pot Cradle Assembly and insert the M2 Burner Unit in the burner rack

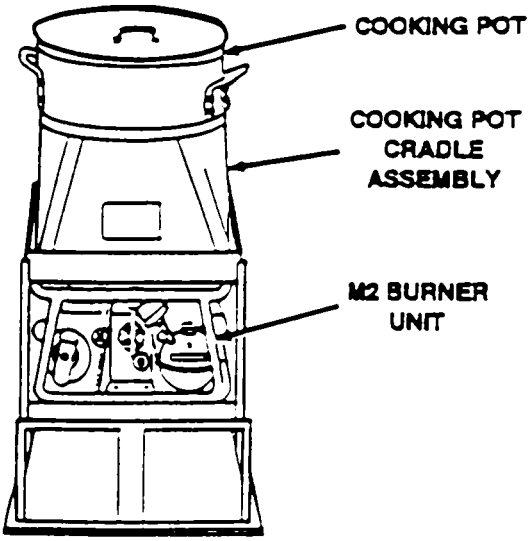

005

NOTE

Carefully, slide M2 burner into the burner rack. Do not force.

b.1 Setup (KCTFF-E). Setup of the KCLFF-E consists of setting up the KCLFF then setting up the additional major components that make up the KCLFF-E (figure 2-1.1):

(1) Remove Range Outfit components from Range Cabinet. (Refer to paragraph 2-7.)

(2) Accessory Outfit components required for cooking and servicing the equipment should be placed convenent to KCLFF-E set up area

(3) Place utensils identified in Appendix D by usable on code for KCLF-E, on a Table Assembly next to can opener and place the fire extinguishers and the first aid kit convenient to the cooking equipment.

(4) Prepare M2 burner units and Range Outfit for use in accordance with TM 10-7360-204-13&P.

(5) Prepare Range Outfit for use by inserting the M2 burner into the upper or lower position according to type of cooking to be done (refer to TM 10-7360-204-13&P).

WARNING

Mount Griddle Base so that eat vents are facing away from cook or server to prevent severe burns

(6) Remove cooking pot and Cooking Pot Cradle from burner rack. Assemble the Griddle Base on the Burner Rack and mount the Griddle on the Griddle Base.

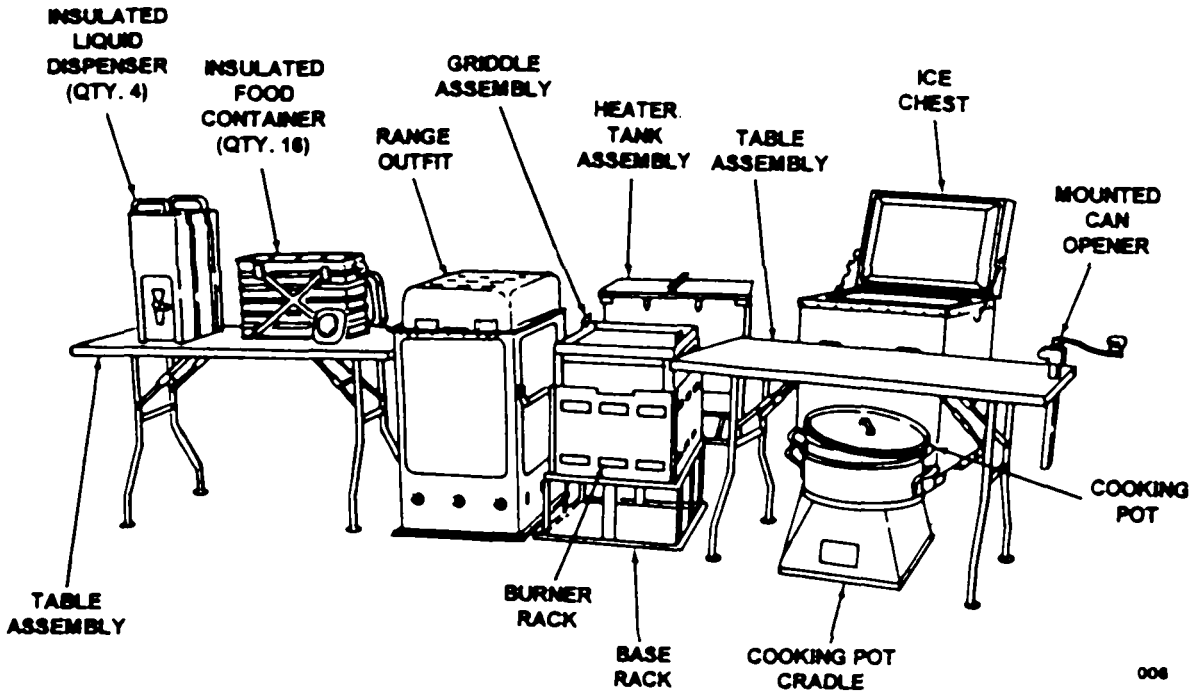

Figure 2-1.1 KCLFF-E Layout for Operation

2-6. OPERATING PROCEDURES.

a. Locate the Heater Tank Assembly in a reasonably level and cleared location.

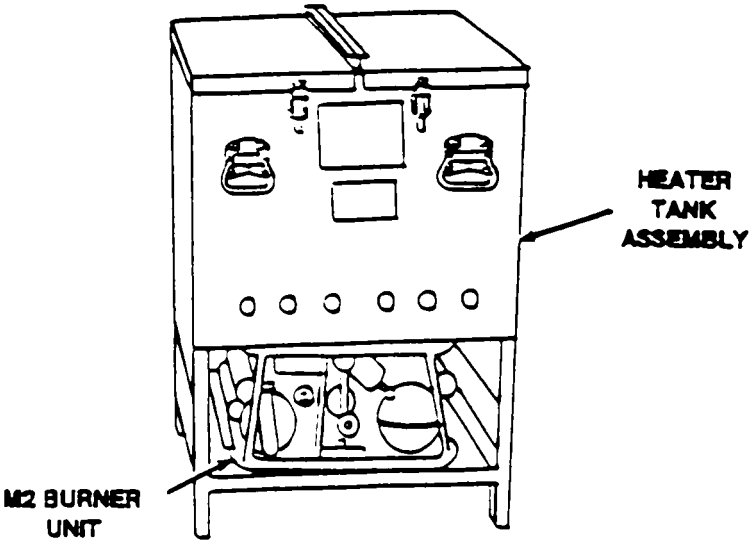

007

2-6. OPERATING PROCEDURES (Continued).

b. Erect the Table Assembly within 6 feet (1.8 meters) of the Heater Tank Assembly. For KCLFF-E, table assemblies should be separated by approximately five feet (See figure 2-1.1.)

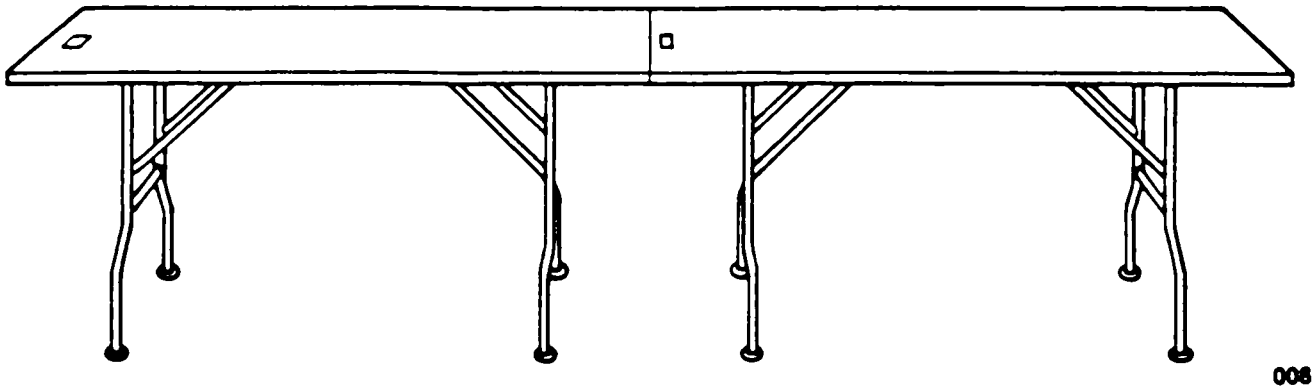

c. Place a fire extinguisher in a convenient location near the kitchen.

NOTE

If less than 20 trays are to be heated at one time, more than 20 gallons (75.7 liters) of water will be needed to cover the trays.

d. Load the Heater Tank Assembly with 20 gallons (75.7 liters) of water approximately 8 inches (20.3 centimeters) deep.

WARNING

The M2 burner units should be moved a minimum of 50 feet from the KCLFF and KCLFF-E and the fuel storage area prior to servicing.

e. Following all precautions and instructions in TM 10-7360204-13&P, start the M2 burner unit Monitor the M2 burner unit for proper flame color.

f. When the M2 burner unit has reached a stable operating state, carefully slide it in the burner rack under the Heater Tank Assembly. Do not force.

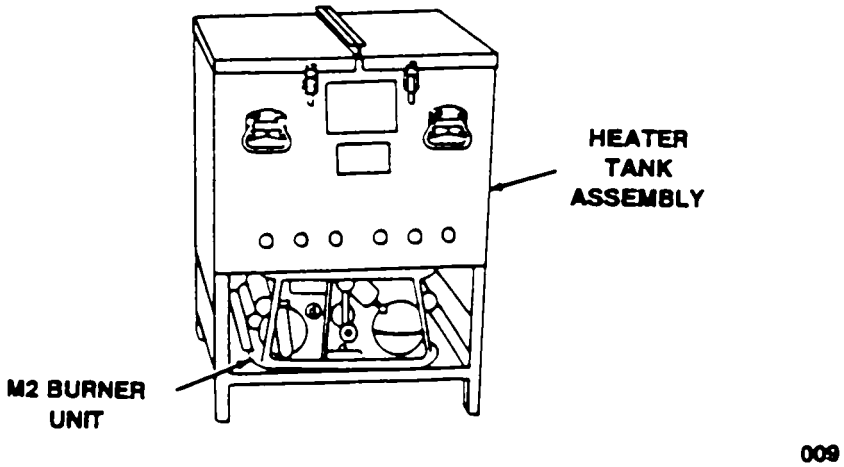

2-6. OPERATING PROCEDURES (Continued)

g. While the water is being heated, ready the tray packs for loading after the water begins to boil.

h. Insert can opener into the holder in the table top of one of the Table Assemblies with Tray-packs to be opened. Place utensils, trays, eating utensils, bread, condiments, etc., on the second table.

i. If a hot beverage is to be served, a 10 or 15 gallon Cooking Pot and Cooking Cradle Assembly should be assembled.

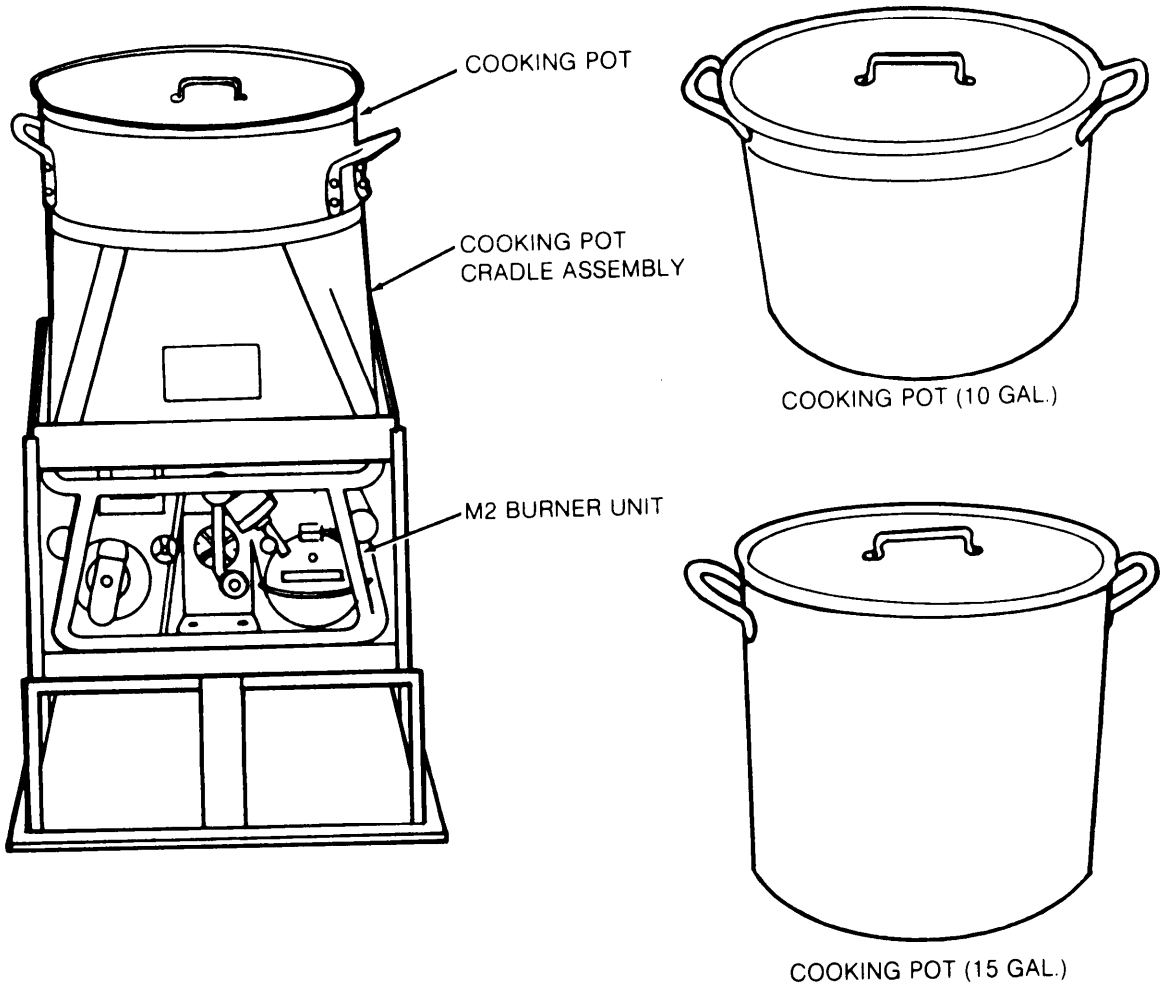

2-6. OPERATING PROCEDURE (Continued)

j. When the water in the Heater Tank Assembly has begun to boil, a maximum of 20 tray packs may be loaded into the tank in the following manner.

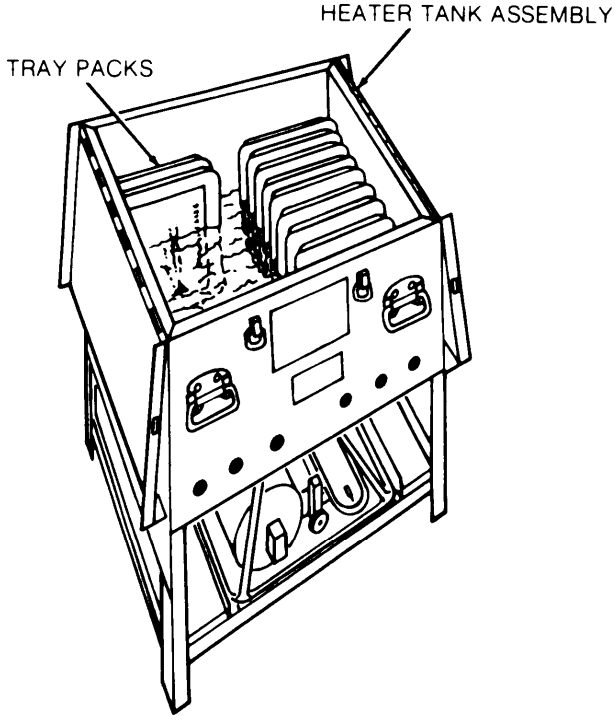

(1) The trays are to be arranged on edge in two rows of ten.

(2) The first tray should be located in the tank with the bottom of the tray against the side of the tank and the short side down.

(3) Close covers on tank. It is not necessary to secure covers with the catches. The catches are intended for use during transport.

k. Closely monitor the pressure gage on the M2 burner unit while the trays are being heated.

l. After 45 minutes in the boiling water, the trays will have reached the serving temperature of 165°F (74°C).

26. OPERATING PROCEDURES (Continued).

m. If the trays are not to be served immediately or are to be served at a remote site, they should be taken from the Heater Tank Assembly and put into Food Container, Insulated.

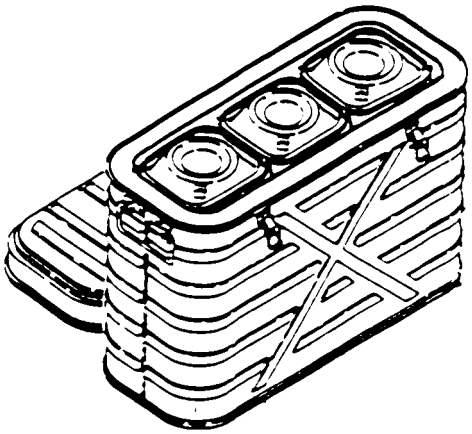

010

n. Continued heating of the water with a lowered M2 burner unit flame will also keep the tray packs warm.

o. If required, another load of 20 tray packs may be loaded into the Heater Tank.

WARNING

Milk or milk type products are not to be put into Dispenser, Liquid, Insulated.

p. Hot beverages should be poured into the Dispenser, Liquid, Insulated (5 gal) for serving or transport to a remote site.

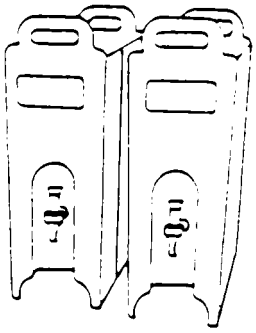

NOTE

Steps q. through w. apply to the additional items contained in KCLFF-E.

q. Refer to TM 10-7360-204-13&P for operation of Range Outfit.

2-6. OPERATING PROCEDURES (Continued).

r. Carefully slide M2 burner unit into Range Cabinet in top or bottom position as required. Do not force

s. If food is to be grilled or fried, remove the cooking pot and cooking pot cradle from the burner rack of the cooking pot cradle assembly. Assemble the griddle base on the burner rack and mount the griddle on the griddle base.

t. Following all precautions and instructions in TM 10-7630-204-13&P, start the M2 burner unit. Monitor the M2 burner unit for proper flame color.

u. When the M2 burner unit has reached a stable operating state, carefully slide it into the burner rack. Do not force.

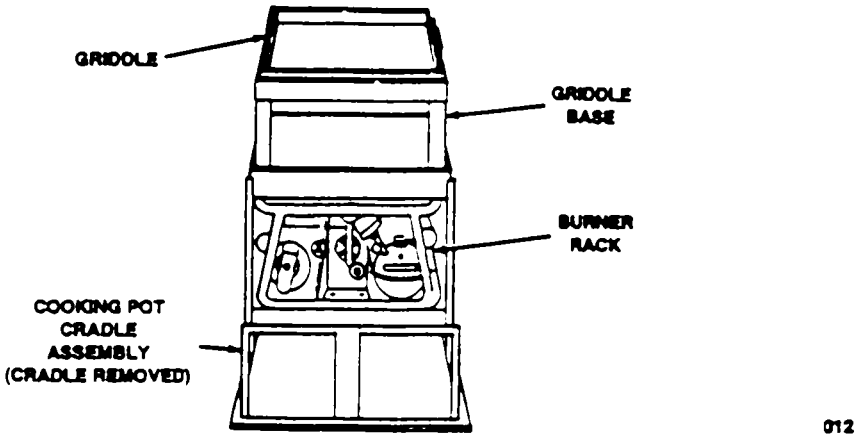

u. If hot food is to be prepared in advance of serving the meal, prepare the Food Container, Insulated as follows:

2-6. OPERATING PROCEDURES (Continued).

WARNING

Potentially hazardous foods (PHF) held in an insulated food container for more than four (4) hours must be discarded as food waste.

(1) Remove the three inserts.

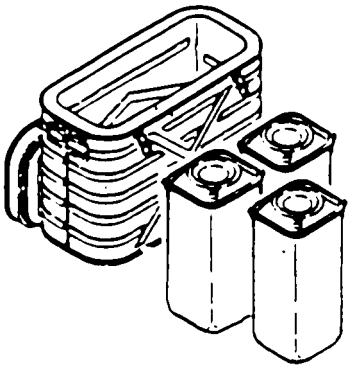

(2) Pour 2 quarts (1.9 liters) of boiling water into the container.

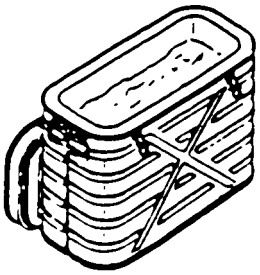

(3) Replace the three inserts.

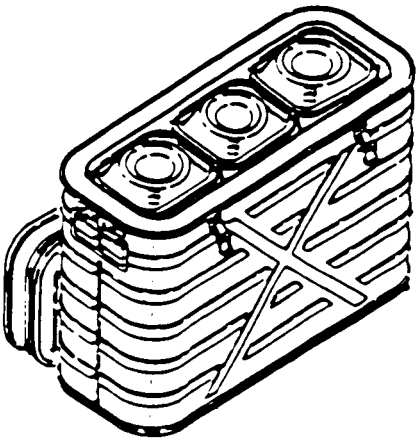

2-6. OPERATING PROCEDURES (Continued).

(4) Close the container lid and secure all latches diagonally.

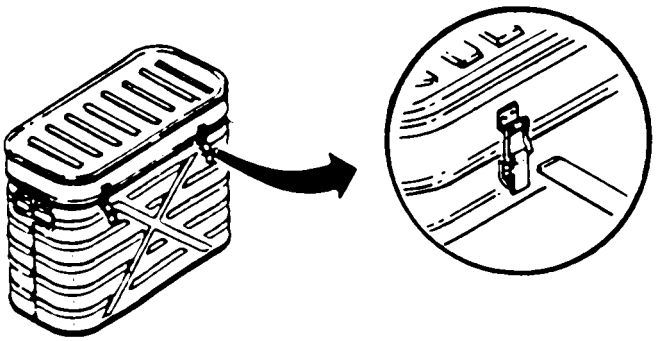

(5) Let container stand for at least 30 minutes.

(6) Remove the inserts.

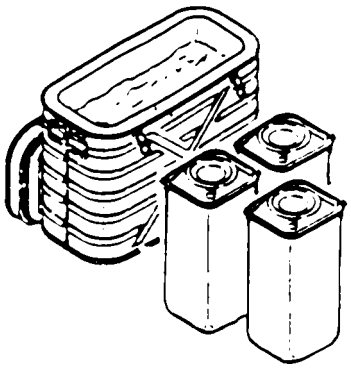

(7) Pour water from container.

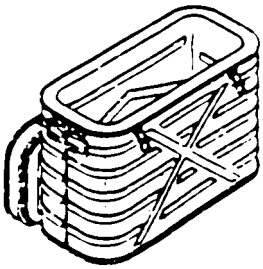

2-6. OPERATING PROCEDURES (Continued).

(8) Put hot food in inserts and replace insert covers.

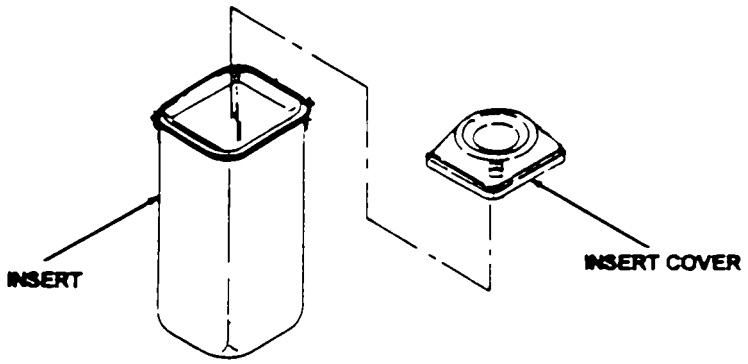

(9) Place the filled inserts into the container.

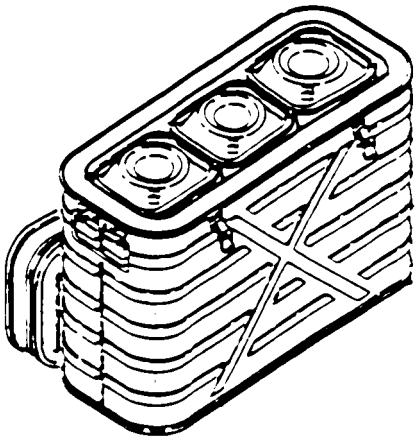

(10) Close and fasten container by securing all latches diagonally.

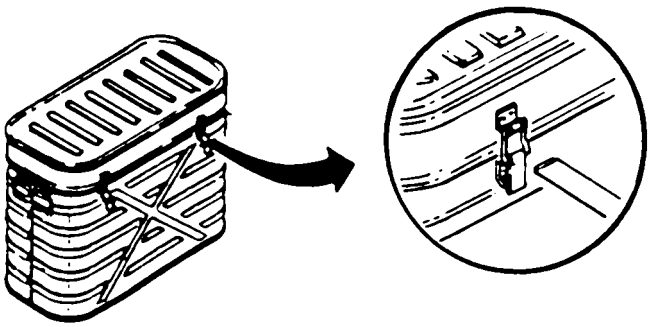

2-6. OPERATING PROCEDURES (Continued).

v. If cold food is to be prepared in advance of serving the meal, prepare the Food Container, Insulated as follows:

(1) Remove the three inserts.

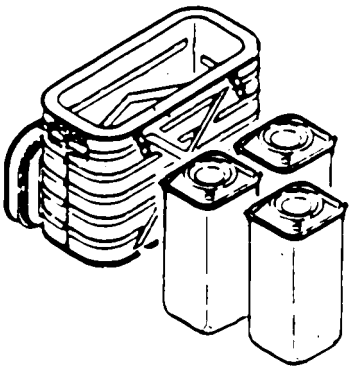

(2) Pour 2 quarts (1.9 liters) of ice water into the container.

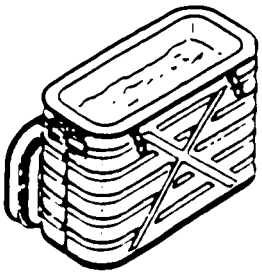

(3) Close the container lid and secure all latches diagonally.

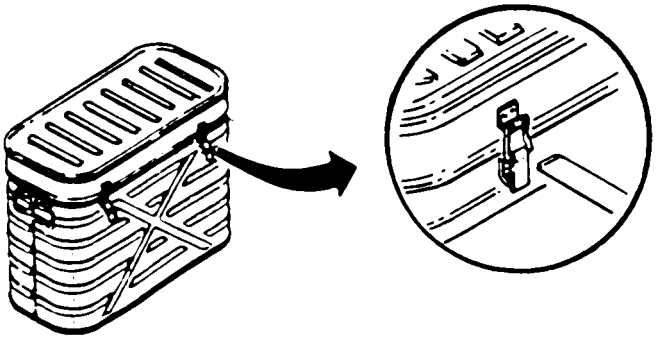

2-6. OPERATING PROCEDURES (Continued).

(4) Let container stand for at least 30 minutes.

(5) Pour ice water from container.

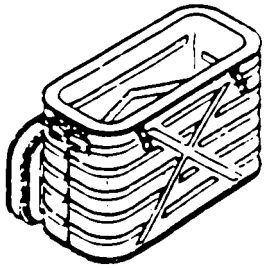

(6) Put cold food in inserts and replace insert cover.

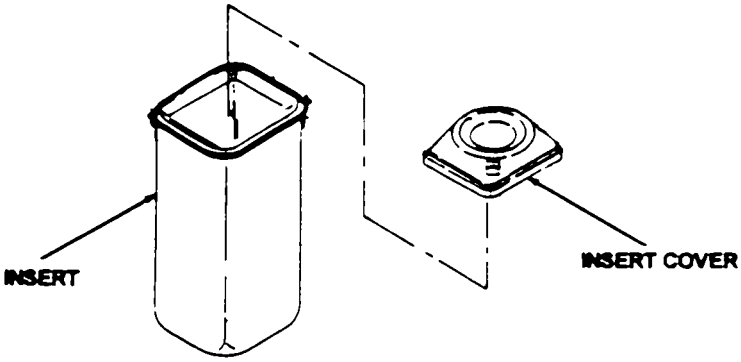

(7) Place the filled inserts into the container.

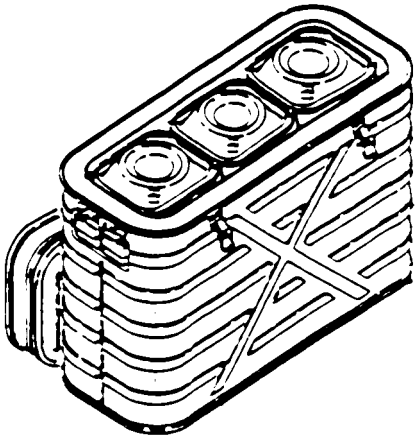

2-6. OPERATING PROCEDURES (Continued).

(8) Close and fasten container by securing all latches diagonally.

NOTE

Label insulated food container indicating food contents.

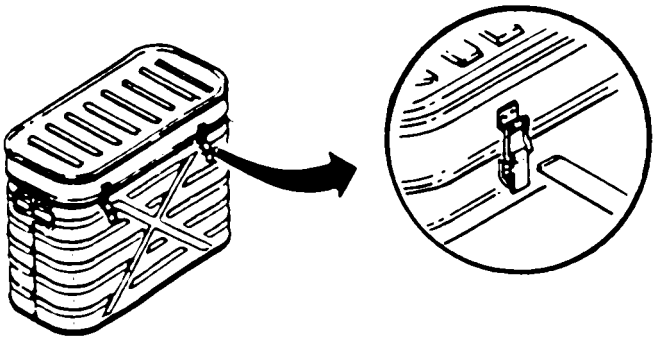

w. The Ice Chest may be used either to store block ice for adding to drinks or to store perishables. When both uses are required, wrap perishables in clean, moisture-proof wrappers so they do not contaminate the ice.

x. Upon completion of cooking, heating or warming cycles, the M2 burner unit should be shut off in accordance with TM 10-7360-204-13&P

y. The hot water in the Heater Tank Assembly and Cooking Pots should be used to clean Food Container, Insulated, Table Assembly, etc., before being discarded.

z. After the Heater Tank Assembly has cooled sufficiently, the water may be removed from the tank by attaching the drain hose and opening the dram valve.

2-6.1 OPERATING INSTRUCTIONS ON DECALS AND INSTRUCTION PLATES. The following operating instructions on deals are to be followed when using any KCLFF or KCLFF-E equipment.

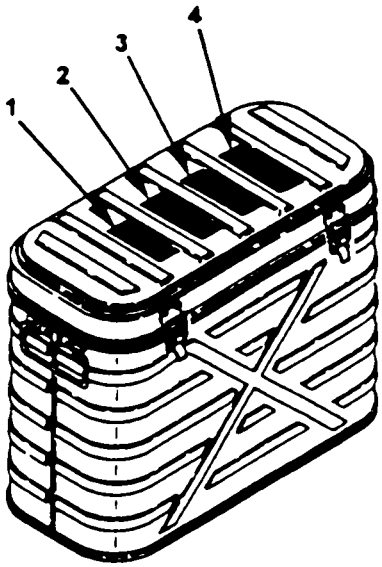

INSTRUCTIONS FOR USE

If the inserts and interior of the container are cold, warming them with hot water before filling with food will keep foods hot longer.

1

DO NOT WARM CONTAINER OVER AN OPEN FLAME

When cleaning the container or inserts, remove all gaskets and wash them throughly with soap and water. Replace container gasket with open side down immediately after cleaning and drying. Replace insert gasket immediately after cleaning and drying.

2

FOOD CONTAINER, INSULATED, WITH INSERTS

Rough handling or lost gaskets will reduce efficiency of this container. To prevent leakage, see that gaskets are in place and that container, inserts and covers are not deformed.

3

NOMENCLATURE OF PARTS

Food Container, Insulated, Without Inserts.
Insert, Food Container, Insulated, Complete 7330-00-243-3253.
Gasket, Outer Cover, Food Container, Insulated 5330-00-032-2722.
Gasket, Insert Cover, Food Container, Insulated 5330-00-032-2721.
Cover, Insert, Food Container, Insulated 7330-00-243-3254.

4

2-7. DISASSEMBLY AND PREPARATION FOR MOVEMENT. The KCLFF and KCLFF-E may be transported on a HM, CUCV, 2 1/2-ton truck, or 5-ton truck. KCLFF and KCLFF-E components and accessories that must be included for movement to a new site are listed in appendix D.

WARNING

- **Allow M2 burner units and lantern to cool before releasing air pressure from fuel tanks. Do not smoke and make sure there is no open flame in the vicinity. Fuel fumes are explosive and highly flammable.**
- **Bleed all M2 burner units and lantern of air before storage.**
- **Dram all fuel from equipment into gasoline cans before movement or storage.**

a. Disassembly

(1) Remove the M2 burner units from the Heater Tank Assembly and the Cooking Pot Cradle * Assembly. For the KCLFF-E, remove the M2 burner units from the Range Outfit and the Cooking Pot Cradle Assembly with Griddle Assembly installed. Drain the gas tanks and prepare units for movement in accordance with TM 10-7360-204-13&P.

(2) Return M2 burner units to Heater Tank Assembly, Cooking Pot Cradle Assembly burner rack and I to the bottom position of the Range Cabinet. For the KCLFF- E, return M2 burner units to the Range Outfit and the Cooking Pot Cradle Assembly burner rack.

(3) Remove can opener from Table Assembly and fold up both Table Assemblies.

b. Parking.

(1) Pack KCLFF accessories in Heater Tank Assembly.

(2) Pack the components of the KCLFF-E as follows:

In the TOOL CHEST:

Thread compound, antiseize
Brush, wire
Cleaner, burner slot
Hose (spare)
Hose, pump, inflating
Spout, can, gasoline
Pump, inflating
Screwdriver, flat
Screwdriver, crosstip
Wrench, combination
Can and slip cover top

In the HEATER TANK:

Tool Chest complete with packed items
Bag, drinking water storage
Board, food slicing chopping
Fire extinquisher

First aid kit
Gloves, heat protective
Knife, boning
Knife, slicing
Lantern, gasoline
Measure, liquid 2-quart
Opener, can, hand for tray packs
Spoon, food service, basting
Spoon, serving, slotted
Tray pack lifter
Tray pack, serving lifter
Number ten can, serving lifter
Can, opener, table mounted
Opener, can
Roll, cutlery
Stone, shaping
Pump, inflating
Hose, pump, inflating
Threaded compound, antiseize
Wrench, adjusting, Crescent
Brush, wire
Lubricating Oil, Gen.
Cleaner, burner slot
Can and slip cover top
Butchers, steel
Chain, Tie In, Left
Chain, Tie In, Right
Whip, egg
Generator, preheat
Screwdriver, crosstip
Wrench, Assembly

Pack the Bake Rack Set in the Heater Tank

Place one M2 Burner Unit in the burner slot under the Heater Tank.

In the Cook Pot Cradle:

Place the 10-gallon cooking pot inside the 15-gallon cooking pot and place the cover on the 15-gallon cooking pot. Place the 15-gallon cooking pot inside the pot cradle shroud. Place one M2 burner unit in the burner rack for the cook pot cradle.

The components that come with the Cabinet, Field Range are packed as follows:

Place the Burner Unit M2 in the lowest burner slot for the Cabinet, Field Range. Pack the following items in the Pot Cradle, Cook:

Place the 10-gallon cooking pot inside the 15-gallon cooking pot and place the cover complete with splash plate on the 15-gallon cooking pot. Place the 15-gallon cooking pot inside the cook pot cradle. Place the cook pot cradle, complete with the items inside the Field Range Cabinet at the top burner slot location.

Place the following items in the Deep Baking and Roasting Pan:

Dipper

Ladle
Skimmer
Turner, Food
Peelers, Potato, Hand
Measuring Set
Knife, Paring
Knife, Boning
Knife, Cooks
Knife, Steak
Spoons, Basting
Fork Food
Protector, Arm, GASOL both types
Pan Rectangular
Cover, Cook Pot (one)
Warmer, Adapter
Scraper, Baker

Place the Baking and Roasting Pan Cover on the Deep Baking and Roasting Pan and place inside the top cover of the Field Range Cabinet.

The items that come with the Field Range Accessory Kit Cabinet are packed as follows:

Pack the following items in the TOOL CHEST:
Thread compound, antiseize
Brush, wire
Cleaner, burner slot
Hose (spare) C
Hose, pump, inflating
Spout, can, gasoline
Pump, inflating
Screwdriver, flat
Screwdriver, crosstip
Wrench, combination
Can and slip cover top

(3) Pack unused tray packs in cartons.
(4) Pack KCLFF or KCLFF-E equipment on vehicle.

Section IV. OPERATION UNDER UNUSUAL CONDITIONS

2-8. GENERAL This section contains instructions for operation of the KCLFF and KCLFF-E in extreme cold, extreme heat, dusty or sandy areas, rainy or humid conditions, salt water areas, at high altitudes, and under windy conditions. Follow instructions for operation of the M2 burner unit in extreme cold, extreme heat, dusty or sandy areas, rainy or humid conditions, salt water areas, at high altitude, and under windy conditions LAW TM 10-7630-204-13&P

2-9. OPERATION IN COLD (BELOW 25°F (-4°C)).

a. Erect a shelter for the KCLFF or KCLFF-E to protect both the equipment and operators from the elements. A shelter will reduce heat loss from food items and beverages. Tentage is not a component of the kitchen because of the limited transportation assets in the light division, however, tentage is available as a CTA item. A minimum of 150 ft2 of tentage is required. When operating below 0°F (-18°C), additional cold weather items such as insulted liner, M-41 heater and smoke pipes are required for operation.

b. Personnel should use rubber gloves and aprons for protection when using the KCLFF or KCLFF-E in a cold environment.

c. Operate the M2 burner units in extreme cold IAW TM 10-7360-204-13&P

2-10. OPERATION IN EXTREME HEAT

WARNING

- **heat will cause tank pressure to increase because of fuel expansion. Make sure you start with prescribed pressure IAW TM 10-7360-204-13&P.**
- **air pressure gage frequently during M2 burner unit operation to "--ensure indicator needle is in the green range (less than 25 psig.).**
- **the unit is to be operated indoors, provide adequate ventilation.**

Operate the M2 Burner Units in Extreme Heat IAW TM 10-7360-204-13&P

2-11. OPERATION IN DUSTY OR SANDY AREAS.

a. Erect a protective shelter for the KCLFF or KCLFF-E, if possible, and take advantage of natural barriers. A shelter is available as a CTA item.

b. Where excess water is available, keep the immediate area wetted down. Keep the equipment as clean as possible.

c. Keep dirt and grit out of the fuel system and reserve fuel supply.

d. Operate the M2 burner units in dusty or sandy areas IAW TM 10-7360-204-13&P

2-12. OPERATION UNDER RAINY OR HUMID CONDITIONS.

a. Erect a protective shelter for the KCLFF or KCLFF-E during inclement weather. If units require a shelter, tentage is a CTA item.

b. When not in use, KCLFF or KCLFF-E must be covered with canvas or other waterproof material. Remove the cover during dry periods and allow equipment to dry.

c. Operate M2 Burner Units under rainy or humid conditions IAW TM 10-7360-204-13&P Change 3 2-23

2-13. OPERATION IN SALT WATER AREAS.

a. Keep equipment free of contact with salt whenever possible. If contact is made, or if equipment is exposed to salt spray, wash equipment frequently with clean fresh water.

b. Operate M2 burner units in Salt Water areas IAW TM 10-7360-204-13&P C

2-14. OPERATION AT HIGH ALTITUDES.

Operate M2 burner units at high altitude IAW TM 10-7360-204-13&P

2-15. OPERATION IN WINDY CONDITIONS.

a. Locate the Heater Tank Assembly and the Range Outfit so that the front of the cabinet faces away from the wind. Locate the Cook Pot Cradle Assembly and Griddle Assembly so that the front of the assembly faces away from the wind.

b. Whenever possible, take advantage of natural barriers to block the wind

c. Operate M2 Burner Units in windy conditions IAW TM 10-7360-204-13&PE

CHAPTER 3
OPERATOR MAINTENANCE INSTRUCTIONS

Section I. LUBRICATION INSTRUCTIONS

3-1. GENERAL. The KCLFF and the KCLFF-E have a small number of moving parts. Lubrication required is described below.

3-2. LUBRICATING PROCEDURES.

a. Hinges. Lubricate hinges on Table Assembly and ice chest with general purpose oil (item 4, appendix F).
b. Perform lubrication procedures on the Range Outfit in accordance with TM-10-7360-204-13&P1

Section II. OPERATOR TROUBLESHOOTING

3-3. GENERAL. Table 3-1 lists common malfunctions of the equipment and contains instructions for you to diagnose and correct each malfunction. Perform steps in the order listed.

3-4. M2 BURNER UNIT AND RANGE OUTFIT: Perform operator troubleshooting on the M2 burner unit and the Range Outfit in accordance with TM 10-7360-204-13&PF

NOTE

This manual cannot list all malfunctions that may occur nor all tests, inspections, or corrective actions. If a malfunction is either not listed or is not corrected by listed corrective actions, notify your supervisor.

Table 3-1. Operator Troubleshooting

MALFUNCTION TEST OR INSPECTION CORRECTIVE ACTION
1. HEATER TANK ASSEMBLY DOES NOT HEAT PROPERLY.
Step 1. Check to see if M2 burner unit flame is on. If not on, light M2 burner unit in accordance with TM 10-7360-204-13&P
Step 2. Check to see if M2 burner unit flame is green. If not green, adjust M2 burner unit in accordance with TM 10-7360-204-13&P!
Step 3. Check to see if M2 burner unit flame is of proper height for temperature desired. Adjust M2 burner unit for desired temperature in accordance with TM 10-7360-204-13&P

Table 3-1. Operator Troubleshooting (Cont'd)

MALFUNCTION TEST OR INSPECTION CORRECTIVE ACTION
2. COOKING POT CRADLE ASSEMBLY DOES NOT HEAT PROPERLY
Step 1. Check to see if M2 burner unit flame is on. If not on, light M2 burner unit in accordance with TM 10-7360-204-13&P Step 2. Check to see if M2 burner unit flame is green. If not green, adjust M2 burner unit in accordance with TM 10-7360-204-13&P Step 3. Check to see if M2 burner unit flame is of proper height for temperature desired Adjust M2 burner unit for desired temperature in accordance with TM 10-7360-204-13&P.
3. GRIDDLE ASSEMBLY DOES NOT HEAT PROPERLY (KCLFF-E).
Step 1. Check to see if M2 burner unit flame is on If not, light M2 burner unit in accordance with TM 10-7360-204-13&PE Step 2. Check to see if M2 burner flame is green. If not green, adjust M2 burner unit in accordance with TM 10-7360-204-13&P. Step 3. Check to see if M2 burner unit flame is of proper height for grilling temperature. If not, adjust M2 burner unit in accordance with TM 10-7360-204-13&P
4. WORK TABLES ARE NOT STURDY.
Step 1. Check tables for properly assembly. Assemble properly. Step 2. Check for bent or broken parts. Straighten or replace bent or broken parts.

Section III OPERATOR MAINTENANCE PROCEDURES

3-5. GENERAL This section contains operator maintenance procedures for the KCLFF equipment.
3-6. M2 BURNER UNIT Procedures to repair the generator and air valve assembly are contained in TM 10-7360-204-13&P

WARNING

Dry cleaning solvent A-A-711 TY2 used to clean part is potentially dangerous to personnel and property. Avoid repeated and prolonged skin contact Do not use near open flame or excessive heat. Flash point of solvent is 100 to 138°F (38 to 59C).

3-7. CLEANING AND SANITATION (KCLFF). Clean Heater Tank Assembly, Cooking Pot Cradle Assembly, Table Assemblies, Insulated Food Containers, Insulated (5 gal) Liquid Dispensers, and accessories such as the can opener and utensils with soap and warm water. Rinse well with clean water and air dry. Do not use abrasive cleaners or wire brushes. You can use a commercial type nylon cleaning pad to remove corrosion or caked-on grease. Check for signs of corrosion or peeling. The coating over the metal may show spots. If so, remove spots with soap and warm water or dry cleaning solvent A-A-711 TY2 (item 3, appendix F) using a nylon cleaning pad. After cleaning, check that braces, angle irons, and support parts are secure.

3.7.1 CLEANING AND SANITATION (KCLFF-E).

a. Range Outfit.
Refer to TM 10-7360-204-13&P for cleaning and sanitation of Range Outfit.
b. Food Containers. Insulated
(1) Clean food container after each use.
(2) Open food container and remove three inserts
(3) Remove the gasket from the food container and wash container and gasket in hot, hand-dishwashing compound solution (item 8, appendix F). Rinse in boiling water.

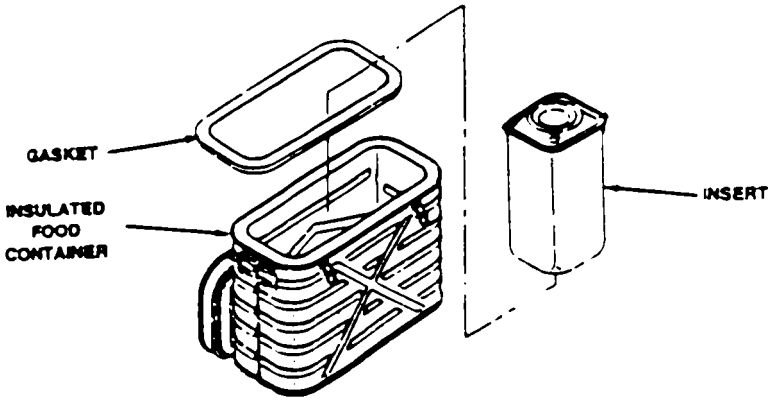

CAUTION

Never immerse the food container in water.

(4) Replace container gasket in container gasket channel flat side down Allow gasket and container to air dry. This allows the gasket to dry in place so it won't stretch, shrink or lose shape.

3.7.1 CLEANING AND SANITATION (KCLFF-E).

c. Insert Food Container Insulated.

(1) Clean inserts after each use.

(2) Remove covers and remove cover seals. C

(3) Wash inserts and seals in hot, hand-dishwashing compound (item 8, appendix F) solution Rinse in boiling water.

(4) Replace seals on insert covers and let covers and inserts air dry. This allows the seals to dry in place so they won't stretch, shrink or lose shape.

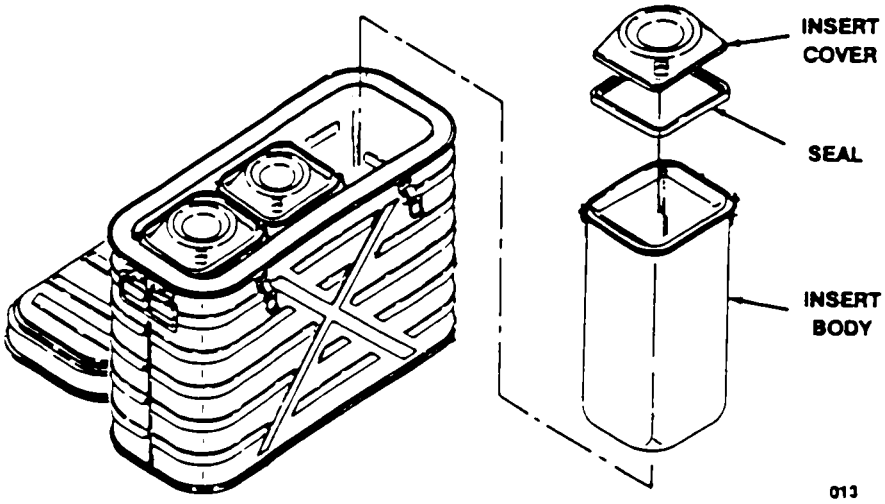

d. Ice Chest.

(1) Clean chest, lid gasket, divider and floorboard with hand-dishwashing compound (item 8, appendix F) and warm water.

(2) Rinse with clean water and let air dry with ice chest lid open.

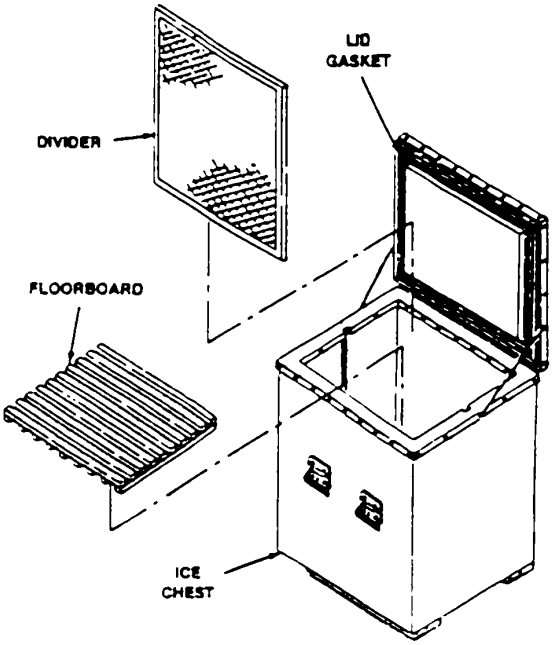

e. Griddle Assembly.

CAUTION

Do not use abrasives to clean griddle Use of abrasives will destroy anodized surface.

NOTE

If the griddle's hard anodized surface is worn off (over 50%) on grilling surface, replace griddle.

(1) Clean griddle and griddle base with hand-dishwashing compound (item 8, appendix F) and warm water.
(2) Rinse with clean water and let air dry.

f. Accessory Outfit.

(1) Clean baring rack set and cooking utensils with hand-dishwashing compound solution (item 8, appendix F).

3-8. PRESERVATION. After KCLFF or KCLFF-E utensils are clean, if they will not be used for several days, wrap each utensil individually in barrier material (item 2, appendix F).

CHAPTER 4
ORGANIZATIONAL MAINTENANCE INSTRUCTIONS

Section I. REPAIR PARTS, SPECIAL TOOLS, TMDE, AND SUPPORT EQUIPMENT

4-1. COMMON TOOLS AND EQUIPMENT. For authorized common tools and equipment, refer to the Modified Table of Organization and Equipment (MTOE) applicable to your unit.

4-2. SPECIAL TOOLS, TEST, MEASUREMENT, AND DIAGNOSTIC EQUIPMENT (TMDE), AND SUPPORT EQUIPMENT. No special TMDE or support equipment are required for organizational maintenance. Special tools required are listed in section III of appendix B and in appendix C.

4-3. REPAIR PARTS. Repair parts authorized for organizational maintenance are listed in appendix C. Section H. SERVICE UPON RECEIPT

4-4. UNPACKING.

CAUTION

Be careful while unpacking to avoid damaging the equipment.

Procedure. After the KCLFF or KCLFF-E has been unloaded, remove all retaining straps, protective tape and coverings. Prepare the KCLFF or KCLFF-E for inspection and operation (paragraph 2-5).

4-5. CHECKING UNPACKED EQUIPMENT

a. Damage. Inspect the equipment for any damage incurred during shipment. If the equipment has been damaged, report the damage on SF Form 364, Report of Discrepancy.

b. Completeness. Check equipment against the packing slip to see if the shipment is complete. Report all discrepancies in accordance with instructions in DA PAM 738-750. The equipment can be placed m service even though a minor assembly or part, which does not affect proper functioning, is missing.

c. Modifications. Check to see whether the equipment has been modified. (Equipment that has been modified will have the Modification Work Order (MWO) number on the case near the nomenclature plate.) Check also to see whether all currently applicable MWO's have been applied. (Current MWO's applicable to * the equipment are listed in DA PAM 750- 10.).

Section III. ORGANIZATIONAL PREVENTIVE MAINTENANCE CHECKS AND SERVICES (PMCS)

4-6. GENERAL Table 4-1 contains a list of the preventive maintenance checks and services (PMCS) which must be performed by organizational maintenance personnel.

a. Item Number Column. Item numbers in the first column indicate the order in which things are to be done. Use the PMCS table item number column to get the numbers for the TM Item No. column of DA Form 2404 (Equipment Inspection and Maintenance Worksheet).

b. Item to be Infected Column. A general description of the item to be inspected used by organizational maintenance personnel for orientation.

c. Procedure Column. Procedure to be performed by organizational maintenance personnel.

NOTE

Perform organizational PMCS procedures on the M2 Burner Unit, the Range Outfit and the Accessory Outfit in accordance with TM 10-7360-204-13&P

Table 4-I. Organizational Preventive Maintenance Checks and Services Quarterly Schedule

Item No.	Item to be Inspected	Procedures
1	Heater Tank Assembly 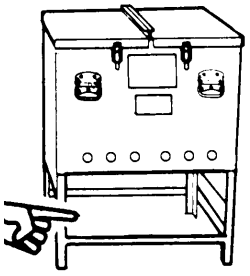	Fill tank with water and check for leaks. Check metal frame for bends and breaks, as well as for broken welds and loose or missing rivets.
2	Cooking Pot Cradle Assembly 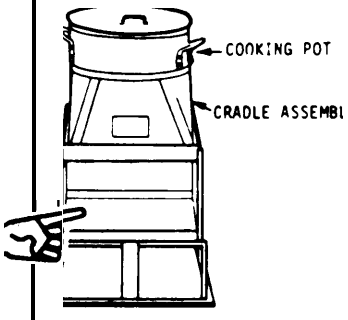	Check metal frame for bends and breaks, as well as for broken welds and loose or missing rivets.
3	Table Assembly 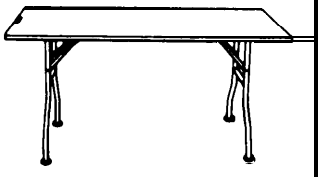	Check metal legs and hinges for bends and breaks, as well as for broken welds and loose or missing rivets.

Table 4-1. Organizational Preventive Maintenance Checks and Services Quarterly Schedule (Cont).

Item No.	Item to be Inspected	Procedures
4	Insulated Liquid Dispenser	Inspect for holes and damage to faucet assembly, latches, gasket and replace.
	Item deleted	
6	Opener, Can, Mounted	Check blade; if dull and difficult to open can, replace blade
7	Fire Extinquisher	Check charge reading and refill if necessary. Replace seal if broken or missing.
8	First Aid Kit	Inventory contents and replace missing or expired items. Consult Medical Specialist for guidance as required.
9	Tool Chest	Inventory contents and replace items.
10	Gasoline Cans	Inspect for leaks and dents. Replace if can leaks or sharp radius dents deeper than 1 inch (2.5 centimeters) are found.

NOTE

If rivet replacement or welding is required, refer to direct support maintenance.

Table 4-1. Organizational Preventive Maintenance Checks and Services Quarterly Schedule (Cont).

Item No.	Item to be Inspected	Procedures
11	Ice Chest	Inspect for damage to skin, bail handle lid retaining chains, torn or deteriorated lid gasket and excessive water in bottom of chest.
12	Griddle Assembly	Inspect for broken welds on griddle base and for excessive wear of anodized coating . If welds are broken or if more than 50% of anodized coating is worn off, replace griddle.
13	Food Container, Insulated 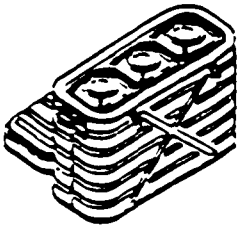	**WARNING** To avoid contamination of container insulation, no repairs to loose or missing rivets are authorized. Replace container. Inspect for missing rivets, broken latches, deteriorated gasket, and holes in inner or outer shell.
14	Inserts, Food Container, Insulated 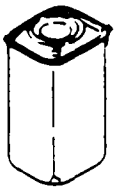	Inspect for missing rivets, bail handle, torn or deteriorated cover seal, and deformed or ill-fitting cover.

Section IV. ORGANIZATIONAL TROUBLESHOOTING

4-7. GENERAL Table 4-2 lists common malfunctions of the equipment and contains instructions for organizational personnel diagnosing and correcting each malfunction. Perform steps in the order list.

NOTE

This manual cannot list all malfunctions that may occur. If a malfunction is either not listed or is not corrected by listed corrective actions, notify your supervisor.

M2 Burner Unit. Perform organizational troubleshooting on the M2 Burner Unit, Range Outfit and Accessory Outfit in accordance with TM 10-7360-204-13&PE

Table 4-2. Organizational Troubleshooting

MALFUNCTION TEST OR INSPECTION CORRECTIVE ACTION
1. HEATER TANK ASSEMBLY DOES NOT HOLD WATER.
Step 1. Check to see that the dram valve is not leaking. If leaking, replace drain valve. Step 2. Check for water leaking from bottom or sides of tan If leak is found and welding is required, refer to direct support maintenance.
2. HEATER TANK ASSEMBLY IS NOT STABLE.
Check metal frame for bends and breaks. If bent, repair using hand tools. If broken and welding or riveting is required, refer to direct support maintenance.
3. COOKING POT CRADLE ASSEMBLY IS NOT STABLE.
Check metal frame for bends and breaks. If bent, repair using hand tools. If broken and welding or riveting is required, refer to direct support maintenance.
4. TABLE ASSEMBLY ARE NOT STURDY
Check metal frame for bends and breaks. If bent, repair using hand tools. If broken and welding or riveting is required, refer to direct support maintenance.

Table 4-2. Organizational Troubleshooting (Cont)

MALFUNCTION	TEST OR INSPECTION	CORRECTIVE ACTION
5	FIRE EXTINGUISHER IS NOT FULLY CHARGED AND SEAL IS BROKEN OR MISSING.	Refill extinguisher and replace seal.
6	FIRST AID KIT INCOMPLETE.	Procure missing/expired items.
7	TOOL KIT INCOMPLETE.	Procure and replace missing items.
8	GASOLINE CANS LEAK OR ARE DENTED.	Replace if leaking or if dents are deeper than 1 inch (2.5 centimeters).
9	ICE MELTS TOO QUICKLY IN ICE CHEST (KCLFF-E).	Replace lid gaskets (Refer to paragraph 4-14.1.) C
10	TOO MUCH WATER RETAINED IN BOTTOM OF ICE CHEST (KCLFF-E).	Remove and clean drain (Refer to paragraph 4-14.1.)
11	ICE CHEST LID DAMAGED (KCLFF-E).	Replace lid (Refer to paragraph 4-14 1.)

Section V. ORGANIZATIONAL MAINTEANCE PROCEDURES

4-8. GENERAL This section contains organizational maintenance procedures for the KCLFF and KCLFF-E equipment. Organizational maintenance for the components listed below is covered in the referenced technical manual.

M2 Burner Unit, Range Outfit and Accessory Outfit - TM 10-7360-204-13&.P

4-9. HEATER TANK ASSEMBLY.

Handle, Bail-Chest

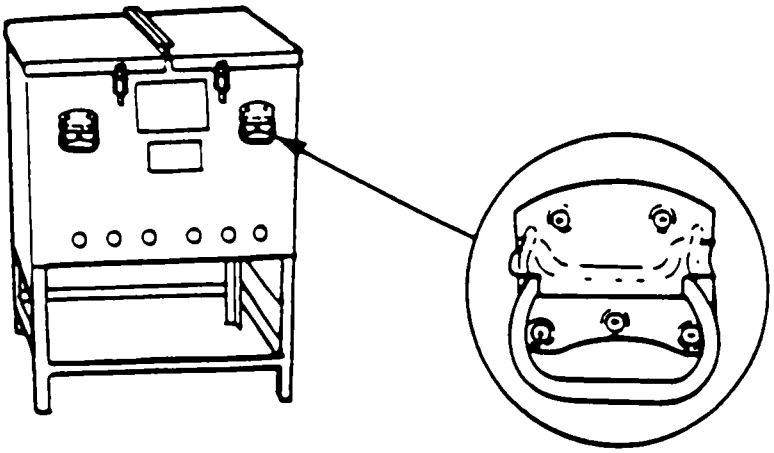

015

a. There are four handles on the Heater Tank assembly.
b. Removal of each Handle.

1. Remove five pan head screws.
2. Remove handle from heater tank assembly.

c. Replace.

1. Align handle with holes in heater tank assembly.
2. Install and tighten five pan head

Ball Valve Assembly

a. The ball valve is attached to a threaded rain pipe.

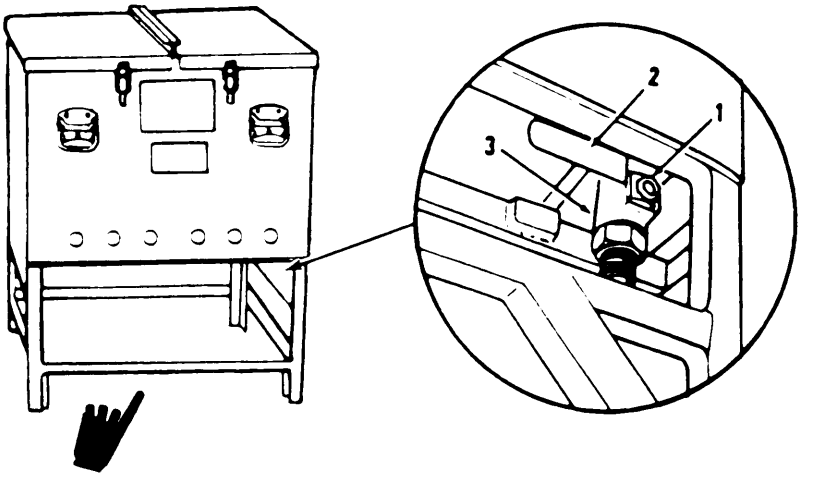

b. Removal

1. Unscrew drain hose from hose adapter.

2. Unscrew hose adapter from ball valve.

3. Remove nut (1) and handle (2) from ball valve (3).

4. Unscrew ball valve from drain pipe.

c. Replace

1. Remove nut and handle from the new ball valve.

2. Screw ball valve on threaded drain pipe.

3. Install handle and nut to ball valve.

4. Screw hose adapter to ball valve.

5. Screw drain hose on the hose adapter.

4-10. TABLE ASSEMBLY. If table assembly hinges are bent or difficult to use, repair or lubricate as required with general purpose oil (item 4, Appendix F).

Leg Assembly

There are two leg assemblies, that make up the Work Table. Each leg assembly is attached to the Work Table by eight hex nuts and eight lock washers.

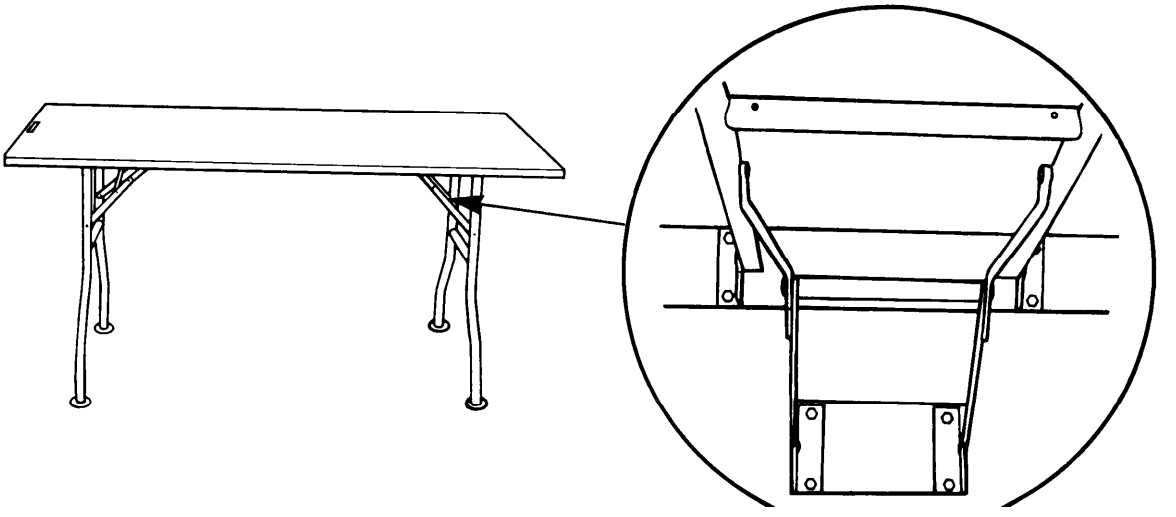

b. Removal

1. Loosen the eight hex nuts from studs and remove.

2. Remove eight lock washers from studs.

3. Remove the Table Leg Assembly by lifting entire assembly off the studs.

c. Replace

1. Align the eight holes on the table leg assembly on to the eight studs on the bottom of the table.

2. Replace the eight lock washers on the studs.

3. Replace the eight hex nuts on the studs and tighten.

4-11. DISPENSER, LIQUID, INSULATED

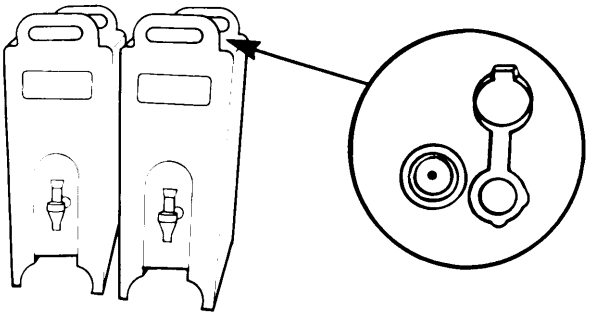

Vent Cap

a. Remove

Remove vent cap form lid.

b. Replace

Install vent cap on lid.

Lid Gasket

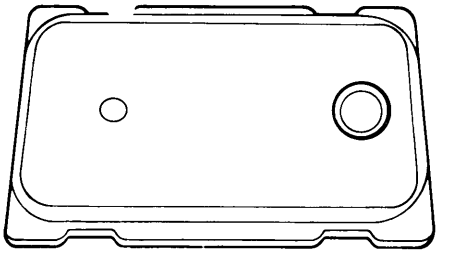

a. Remove

Remove gasket from lid.

b. Replace
Install gasket on lid.

Latch Assembly

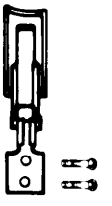

a. Remove

1. Remove two screws.

2. Remove latch assembly.

b. Replace

1. Align latch assembly with two holes in Dispenser, Liquid, Insulated.

2. Install and tighten two screws.

Faucet assembly and spout assembly

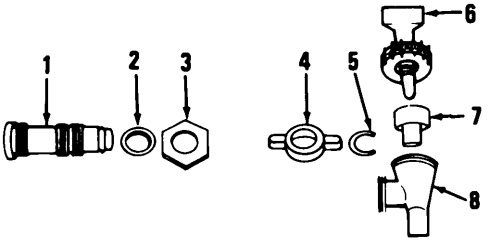

a. Removal

1. Loosen wing nut (4) and remove faucet (8) from spout (1).

2. Loosen Cap (6) from top of faucet (8) and remove silicone rubber seat cup (7).

3. Remove “C” nut (5) and wing nut (4) from spout (1).

4. Remove hex nut (3), spout (1) and “O” ring (2).

b. Replace
   1. Install spout (1) and O-ring (2) from the inside through dispenser wall.
   2. Replace hex nut (3) and tighten.
   3. Install wig nut (4) and 'Co nut (5).
   4 Install silicone rubber seal cup (7) and install top (6) on faucet (8) and tighten.
   5. Install faucet (8) to spout(l) and tighten wing nut (4).

4-12. FOOD CONTAINER, INSULATED.

Food Container Gasket.

a. Removal

Open the insulated food container cover and pull off the gasket from the container body.

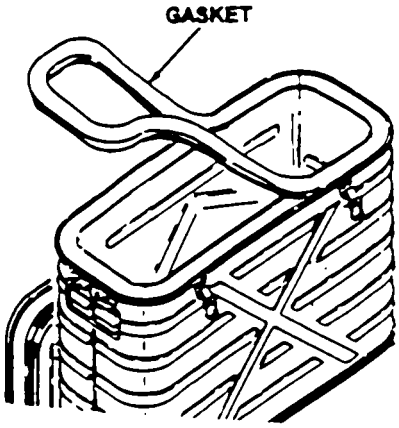

a Replace.

Install new gasket on the insulated food container.

Insert Seal

a. Removal

Remove the insert lid and remove the seal from the insert.

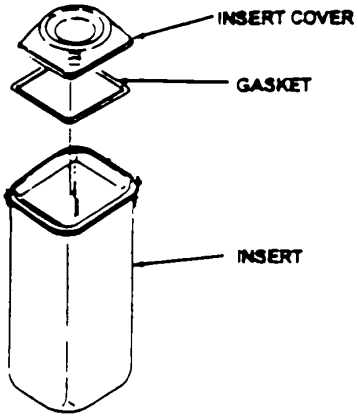

b. Replace

Install a new seal.

4-13. OPENER, CAN, MOUNTED.

Blade

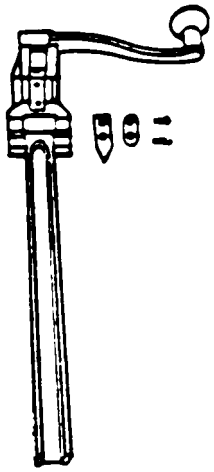

a Removal.
Remove two screws, I support plate and blade.

b. Replace.
1. Install new blade and I support plate.
2. Install and tighten two screws.

4-14 FIRE XTLINGUISHER. Refill as necessary. Refer to TM 5-4200-200-10 for instructions.

4-14.1. ICE CHEST.

Lid Gaskets

a Remove
1. Remove 22 slotted screws (1) and two short gasket retainers (2).
2. Remove two short gaskets (3) from ice chest lid (4).
3. Remove 22 slotted screws (5) and two long gasket retainers (6).
4. Remove two long gaskets (7) from ice chest lid (4).

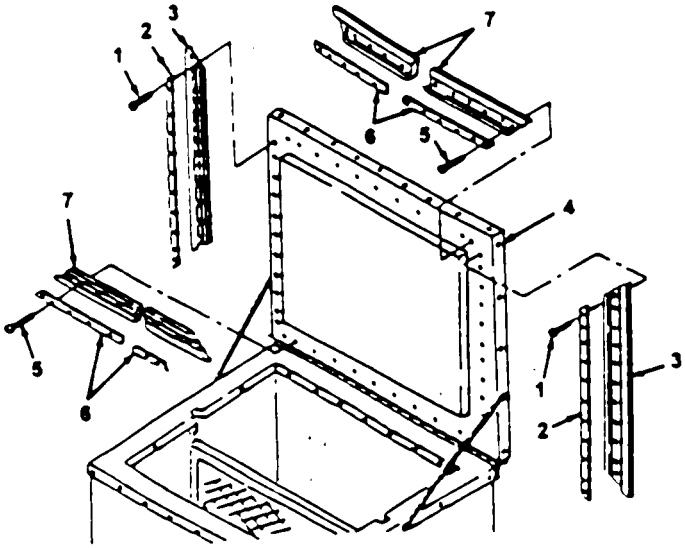

b. Replace
   1. Measure, cut and miter to size gasket bulk material
   2. Drill screw holes in gasket (Figure G-l, appendix G).
   3. Apply vinyl cement (Item 5, Appendix F) to gaskets (3) and (7) miter joints and between gaskets (3) and (7) and lid bottom making certain that the complete width of flange is covered with cement.
   4. Install gaskets (3) and (7) on lid bottom Ensure vinyl cement is thoroughly dry before installing retainers
   5. Install two long gasket retainers (6) and secure 22 slotted screws (5).
   6. Install two short gasket retainers (2) and secure with 22 slotted screws (1).

Drain

a. Remove.

   1. Remove drain hose (1).
   2. Unscrew plastic elbow (2) and washer (3) from bottom of ice chest (4).

b. Replace.

   1. Assure that the dram hose (1) and plastic elbow are clear of obstructions.
   2. Install plastic elbow (2) in bottom of ice chest (3). Hand tighten.
   3. Replace hose (1) on elbow (2).

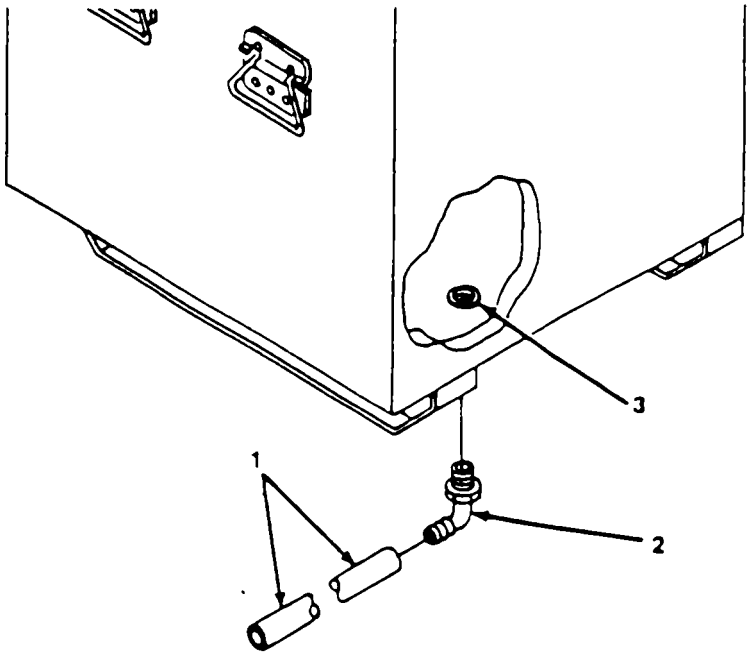

4-14.1. ICE CHEST (Continued).

Ice Chest Lid.

A Remove.

1. Remove two crosshead screws (1) that secure lid chains (2) to lid (3).
2. Remove nine crosshead screws (4) and separate piano hinge (5) from lid (3).
3. Lift lid (3) from ice chest (6).

b. Replace.

1. Install lid (3) on ice chest (6).
2. Align holes in piano hinge (5) with holes in lid (4. Install nine crosshead screws (4).
3. Install chains (2) on lid (3) and secure with two crosshead screws (1).

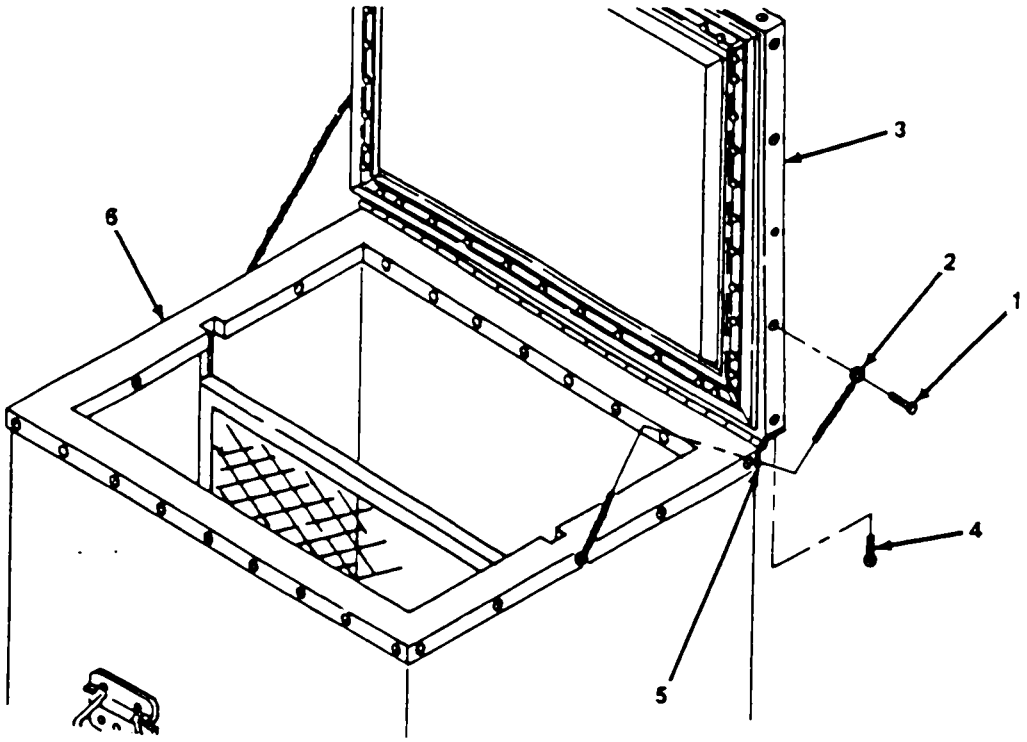

018

Section VI. PREPARATION FOR STORAGE OR SIPYMENT

4-15. ADMINISIRATLE STORAGE.

a Placement of equipment in administrative storage should be for short periods of time when a shortage of maintenance effort exists. Items should be in mission readiness within 24 hours or within the time factors as determined by the directing authority. During the storage period appropriate maintenance records will be kept.

b. Before placing equipment in administrative storage, current maintenance services and equipment serviceable criteria (ESC) evaluations should be completed, shortcomings and deficiencies should be corrected and all modification work orders (MWO's) should be applied. Prepare M2 burner units, Range Outfit and Accessory Outfit for storage in accordance with TM 10-7360-204-13&PE

c Storage site selection. Inside storage is preferred for items selected for administrative storage. If inside storage is not available, trucks, vans, convex containers and other containers may be used.

4-16. PREPARATION FOR STORAGE OR SHIPEMENT. Preservation, packaging, and packing of military supplies and equipment is covered in TM 38-230-2.

CAUTION

Do not use abrasive cleaners or wire brushes on KCLFF or KCLFF-E components or accessories. You may damage the finish Use a commercial type nylon cleaning pad to remove corrosion or caked-on grease.

a. Assemblies.

WARNING

Drycleaning solvent, used to clean parts is potentially dangerous to personnel and property. Avoid repeated and prolonged skin contact. Do not use near open flame or excessive heat. Flash point of solvent is 100 to 138°F (38 to 590C).

CHAPTER 5

DIRECT SUPPORT MAINTENANCE INSTRUCTIONS

Section I. GENERAL

5-1. SCOPE OF DIRECT SUPPORT MAINTENANCE. Direct support maintenance identified in appendix B consists of repairing or replacing components that are riveted or welded. Refer to TM 9-450 for information on metal body repairs. Direct support maintenance of the M2 Burner Unit is covered in TM 10-7360-204-13&P.

Section II. DIRECT SUPPORT MAINTENANCE PROCEDURES

5-2. RIVET REMOVAL. Remove rivets as shown below:

CAUTION

When removing rivets, do not increase the size of the original rivet hole so that the original rivet requires replacement with a larger rivet.

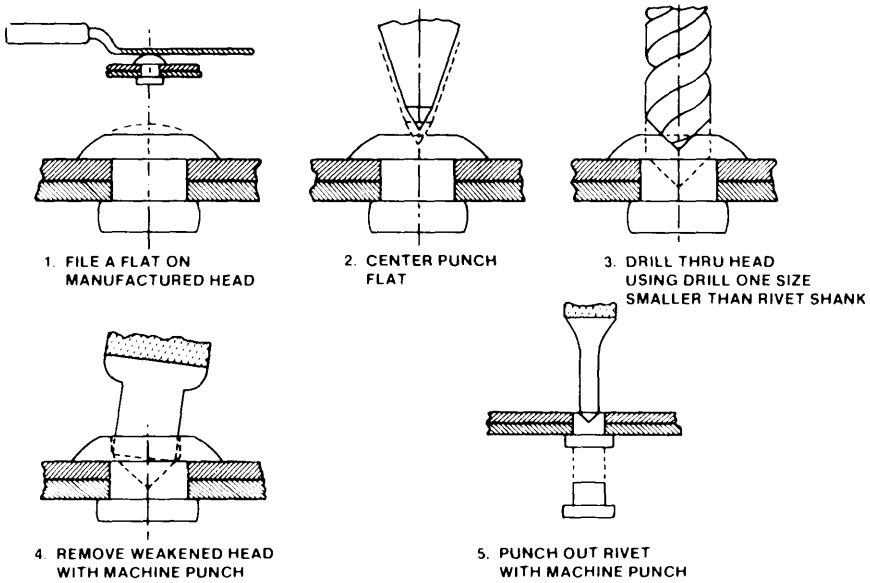

5-3. RIVET REPLACEMENT

a. Procedure.

(1) Check for evidence of loose or working rivets.

NOTE

A working rivet. has movement under structural stress, but has not loosened so much that you can see movement. This condition can sometimes be detected by a dark, greasy residue or damage to paint and primers around rivet heads.

(2) Where possible, replace rivets with the same type as originally used.

(a) The rivet code designation gives the type of rivet, the material, the diameter in 32nds of an inch, and the length in 16ths of an inch.

(b) The determination of the length of a rivet is an important part of any repair. The length used depends on the grip or combined thickness of material to be riveted plus a minimum allowance of 1/2 diameter for upsetting the shank.

(c) Always use the nearest standard rivet length greater than the calculated sum.

(3) There are specific considerations in laying out the rivet pattern for a repair; these rules will apply generally in all instances.

(a) When possible, rivet edge distance, rivet spacing, and distance between rows should be the same as that of the original installation.

(b) When new sections are to be added, the edge distance measured from the center of the rivet should never be less than two times the diameter of the shank. The distance between rivets or pitch should be at least three times the diameter; the distance between rows should never be less than 1/2 times the diameter.

(c) Mark the rivet pattern on the metal with a soft pencil to avoid scratching.

(4) Rivet holes may be drilled with either a light power drill or a hand drill (standard shank twist drill).

(a) Before drilling, center-punch all rivet locations. The center-punch mark should be large enough to prevent the drill from slipping out of position.

5-3. RIVET REPLACEMENT (Continued)

(b) Place drill in center-punched mark. When using a power drill, rotate the bit a few turns by hand before starting motor. While drilling, always hold drill at a 90-degree angle to work.

(c) Avoid excessive pressure; let the drill do the cutting. Never push drill through stock. Remove all burrs with a metal countersink or file.

(d) Transfer holes from a drilled part to another part by placing second part over first and using established holes as a guide.

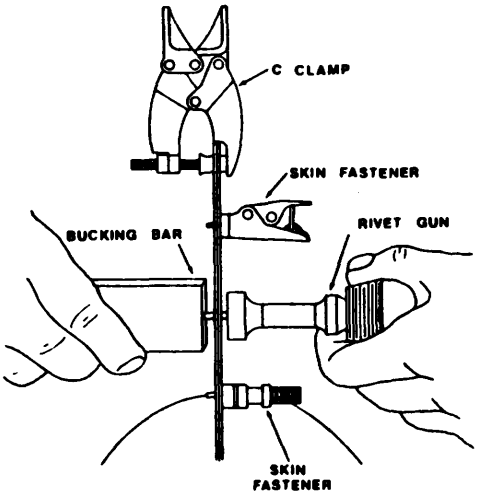

(e) After drilling and before you drive rivets, the metal sheets must be held securely in position to prevent slippage during riveting. When two pieces of metal have been drilled through, use any of several types of available skin fasteners to hold them in alignment.

5-4. WELDING. KCLFF major components, such as the Heater Tank Assembly, Cooking Pot Cradle Assembly, and Table Assembly may require repair by welding. Refer to TM 9-237 for information on welding theory and application.

APPENDIX A

REFERENCES

A-1. SCOPE. This appendix lists forms, pamphlets, field manuals, technical manuals, military specifications, military standards, technical bulletins, technical circulars and common table of allowances in this manual.

A-2. FORMS.

Equipment Inspection And Maintenance Worksheet ..... DA Form 2404
Hand Receipt..... DA Form 2062
Quality Deficiency Report..... SF 368
Report of Discrepancy..... SF 634
Recommended Changes to Equipment Publications..... DA Form 2028-2

A-3 PAMPHLETS.

The Army Maintenance Management System (TAMMS)..... DA PAM 738-750
Modification Work Orders Index..... DA PAM 750-10

A4 FIED MANUALS.

First Aid for Soldiers..... FM 21-11

A-5 TECHNICAL MANUALS.

Packaging of Materiel..... TM 38-230-2
Procedures for Destruction of Equipment to Prevent Enemy Use ..... TM 750-244-3
Range Outfit, Field Gasoline, Model M59, Burner Unit, Gasoline
Models M2 and M2A..... TM 10-7360-204-13&P

A4 MILITARY SPECIFICATIONS.

Barrier Material, Greaseproofed, Waterproofed, Flexible MIB-121
Corrision Prevention, Petroleum, Spraying Application for Handling
Food Machinery and Equipment..... MIIC-10382

A-7 MILITARY STANDARDS.

Abbreviations for Use on Drawings, Specifications, Standards and
Technical Documents..... MILSTD-12

A-8. TECHNICAL BULLETINS.

Hand Portable Fire Extinguishers Approved for Army Users ..... TB 54200-20010

A-9. TECHNICAL CIRCULAR

Metal Body and Related Operations ..... TC 9-510
Operator's Circular Welding Theory and Application ..... TC 9237

A-10. COMMON TABLE OF ALLOWANCES.

Amy Medical Department Expendable/Durable Items..... CTA 8-100
Expendable/Durable Items ..... CTA 50-970

APPENDIX B

MAINTENANCE ALLOCATION CHART (MAC)

Section I. INTRODUCTION

B-1. The Army Maintenance System MAC

This introduction provides a general explanation of all maintenance and repair functions authorized at the two maintenance levels under the Two-Level Maintenance System concept.

This MAC (immediately following the introduction) designates overall authority and responsibility for the performance of maintenance functions on the identified end item or component. The application of the maintenance functions to the end item or component levels, which are shown on the MAC in column (4) as:

Field - includes two columns, Unit Maintenance and Direct Support maintenance. The Unit maintenance column is divided again into two more subcolumns, C for Operator or Crew and O for Unit Maintenance.

Sustainment – includes two subcolumns, general support (H) and depot (D).

The tools and test equipment requirements (immediately following the MAC) list the tools and test equipment (both special tools and common tool sets) required for each maintenance function as referenced from the MAC.

The remarks (immediately following the tools and test equipment requirements) contain supplemental instructions and explanatory notes for a particular maintenance function.

B-2. Maintenance Functions

Maintenance functions will be limited to and are defined as follows:

1. Inspect**.** To determine the serviceability of an item by comparing its physical, mechanical, and/or electrical characteristics with established standards through examination (e.g., by sight, sound, or feel.) This includes scheduled inspection and gagings and evaluation of cannon tubes.

2. Test. To verify serviceability by measuring the mechanical, pneumatic, hydraulic, or electrical characteristics of an item and comparing those characteristics with prescribed standards on a scheduled basis, i.e., load testing of lift devices and hydrostatic testing of pressure hoses.

3. Service. Operations required periodically to keep an item in proper operating condition; e.g. to clean (includes decontaminate, when required), to preserve, to drain, to paint, or to replenish fuel, lubricants, chemical fluids, or gases. This includes scheduled exercising and purging of recoil mechanisms. The following are examples of service functions:

   a. Unpack. To remove from packing box for service or when required for the performance of maintenance operations.

   b. Repack. To return item to packing box after service and other maintenance operations.

   c. Clean. To rid the item of contamination.

d. Touch up. To spot paint scratched or blistered surfaces.

e. Mark. To restore obliterated identification.

4. Adjust. To maintain or regulate, within prescribed limits, by bringing into proper position, or by setting the operating characteristics to specified parameters.

5. Align. To adjust specified variable elements of an item to bring about optimum or desired performance

6. Calibrate. To determine and cause corrections to be made or to be adjusted on instruments of test, measuring, and diagnostic equipment used in precision measurement. Consists of comparisons of two instruments, one of which is a certified standard of known accuracy, to detect and adjust any discrepancy in the accuracy of the instrument being compared.

7. Remove/install. To remove and install the same item when required to perform service or other maintenance functions. Install may be the act of emplacing, seating, or fixing into position a spare, repair part, or module (component or assembly) in a manner to allow the proper functioning of an equipment or system.

8. Paint. To prepare and spray color coats of paint so that the ammunition can be identified and protected. The color indicating primary use is applied, preferably, to the entire exterior surface as the background color of the item. Other markings are to be repainted as original so as to retain proper ammunition identification.

9. Replace. To remove an unserviceable item and install a serviceable counterpart in its place. “Replace” is authorized by the MAC and assigned maintenance level is shown as the third position code of the Source, Maintenance and Recoverability (SMR) code.

10. Repair. The application of maintenance services, including fault location/troubleshooting, removal/installation, disassembly/assembly procedures and maintenance actions to identify troubles and restore serviceability to an item by correcting specific damage, fault, malfunction, or failure in a part, subassembly, module (component or assembly), end item, or system.

NOTE

The following definitions are applicable to the “repair” maintenance function: Services. Inspect, test, service, adjust, align, calibrate, and/or replace.

Fault location/troubleshooting. The process of investigating and detecting the cause of equipment malfunctioning; the act of isolating a fault within a system or Unit Under Test (UUT).

Disassembly/assembly. The step by step breakdown (taking apart) of a spare/functional group coded item to the level of its least component, that is assigned an SMR code for the level of maintenance under consideration (i.e. identified as maintenance significant).

Actions. Welding, grinding, riveting, straightening, facing, machining, and/or resurfacing.

11. Overhaul. That maintenance effort (service/action) prescribed to restore an item to a completely serviceable/operational condition as required by maintenance standards in appropriate technical publications. Overhaul is normally the highest degree of maintenance performed by the Army. Overhaul does not normally return an item to like new condition.

12. Rebuild. Consists of those services/actions necessary for the restoration of unserviceable equipment to a like new condition in accordance with original manufacturing standards. Rebuild is the highest degree of material maintenance applied to Army equipment. The rebuild operation includes the act of returning to zero those age measurements (e.g., hours/miles) considered in classifying Army equipment/components.

B-3. Explanation of Columns in the MAC, Section II

Column (1) Group Number. Column (1) lists FGC numbers, the purpose of which is to identify maintenance significant components, assemblies, subassemblies, and modules with the Next Higher Assembly (NHA).

Column (2) Component/Assembly. Column (2) contains the names of components, assemblies, subassemblies, and modules for which maintenance is authorized.

Column (3) Maintenance Function. Column (3) lists the functions to be performed on the item listed in column (2). (For a detailed explanation of these functions refer to "Maintenance Functions" outlined above).

Column (4) Maintenance Level. Column (4) specifies each level of maintenance authorized to perform each function listed in column (3), by indicating work time required (expressed as man-hours in whole hours or decimals) in the appropriate subcolumn. This work time figure represents the active time required to perform that maintenance function at the indicated level of maintenance. If the number or complexity of the tasks within the listed maintenance function varies at different maintenance levels, appropriate work time figures are to be shown for each level. The work time figure represents the average time required to restore an item (assembly, subassembly, component, module, end item, or system) to a serviceable condition under typical field operating conditions. This time includes preparation time (including any necessary disassembly/assembly time), troubleshooting/fault location time, and quality assurance time in addition to the time required to perform the specific tasks identified for the maintenance functions authorized in the MAC. The system designations for the various maintenance levels are as follows:

Field:

C Operator or Crew maintenance
O Unit maintenance
F Direct Support maintenance

Sustainment:

L Specialized Repair Activity
H General Support maintenance
D Depot maintenance

NOTE

The “L” maintenance level is not included in column (4) of the MAC. Functions to this level of maintenance are identified by work time figure in the “H” column of column (4), and an associated reference code is used in the REMARKS column (6). This code is keyed to the remarks and the SRA complete repair application is explained there.

Column (5) Tools and Equipment Reference Code. Column (5) specifies, by code, those common tool sets (not individual tools), common Test, Measurement and Diagnostic Equipment (TMDE), and special tools, special TMDE and special support equipment required to perform the designated function. Codes are keyed to the entries in the tools and test equipment table.

Column (6) Remarks Code. When applicable, this column contains a letter code, in alphabetic order, which is keyed to the remarks table entries.

B-4. Explanation of Columns in the Tools and Test Equipment Requirements, Section III

Column (1) - Tool or Test Equipment Reference Code. The tool or test equipment reference code correlates with a code used in column (5) of the MAC.

Column (2) - Maintenance Level. The lowest level of maintenance authorized to use the tool or test equipment.

Column (3) - Nomenclature. Name or identification of tool or test equipment.

Column (4) - National Stock Number (NSN). The NSN of the tool or test equipment.

Column (5) - Tool Number. The manufacturer’s part number, model number, or type number.

B-5. Explanation of Columns in Remarks, Section IV

Column (1) - Remarks Code. The code recorded in Column (6) of the MAC.

Column (2) - Remarks. This column lists information pertinent to the maintenance function being performed as indicated in the MAC.

Section II. MAINTENANCE ALLOCATION CHART FOR KITCHEN, COMPANY LEVEL FIELD FEEDING AND KITCHEN, COMPANY LEVEL FIELD FEEDING -ENHANCED

(1) GROUP NUMBER	(2) COMPONENT/ ASSEMBLY	(3) MAINTENANCE FUNCTION	(4) MAINTENANCE LEVEL					(5) TOOLS AND EQUIPMENT REFERENCE CODE	(6) REMARKS CODE
			FIELD			SUSTAINMENT			
			UNIT		DIRECT SUPPORT	GENERAL SUPPORT	DEPOT		
			C	O	F	H	D		
00	KITCHEN, COMPANY LEVEL FIELD FEEDING-ENHANCED								
01	HEATER TANK ASSY	Inspect	0.1						
		Service	0.2						E
		Repair		0.5	1.0			7,8	A,B,D
02	COOKING POT CRADLE ASSY	Inspect	0.1						
		Service	0.3						E
		Repair		0.5	1.5			7,8	A,B,D
0201	CRADLE, COOKING POT	Inspect	0.1						
		Service	0.1						E
		Repair		0.2	1.0			7,8	A,B
0202	RACK, BURNER	Inspect	0.1						
		Service	0.1						E
		Repair		0.2	1.0			7	A,B
0203	RACK, BASE	Inspect	0.1						
		Service	0.1						E
		Repair		0.2	1.0			7	A,B
03	TABLE ASSY	Inspect	0.1						
		Service	0.3						E
		Repair		0.3	1.0			7	A,B
04	DISPENSER, LIQUID, INSULATED	Inspect	0.1						
		Service	0.3						E
		Repair		0.3				7	
05	FOOD CONTAINER, INSULATED	Inspect	0.1						
		Service	0.3						E
		Repair		0.5				7	
06	OPENER, CAN, MOUNTED	Inspect	0.1						
		Service	0.1						E
		Repair		0.2				7	
07	CHEST, ICE STORAGE	Inspect	0.1						
		Service	0.3						E
		Repair		.5	.5			7,8	

Section II. MAINTENANCE ALLOCATION CHART FOR KITCHEN, COMPANY LEVEL FIELD FEEDING AND KITCHEN, COMPANY LEVEL FIELD FEEDING –ENHANCED - continued

(1) GROUP NUMBER	(2) COMPONENT/ ASSEMBLY	(3) MAINTENANCE FUNCTION	(4) MAINTENANCE LEVEL					(5) TOOLS AND EQUIPMENT REFERENCE CODE	(6) REMARKS CODE
			FIELD			SUSTAINMENT			
			UNIT		DIRECT SUPPORT	GENERAL SUPPORT	DEPOT		
			C	O	F	H	D		
0701	LID ASSEMBLY	Inspect	0.1						
		Service	0.1						E
		Repair		0.5				7,9	
08	RANGE OUTFIT, FIELD, GASOLINE	Inspect	0.2						C
		Service	0.1						C
		Repair		4.0				1,2,3 4,5,6	C
09	BURNER UNIT, GASOLINE	Inspect	0.6						C
		Service	0.5						C
		Repair		0.1				1,2,3 4,5,6	C
10	GRIDDLE ASSY	Inspect	0.1						
		Service	0.1						E
		Repair		0.2	1.0				A,B
11	ACCESSORY OUTFIT	Inspect	0.1						C
		Service	0.4						C,E
		Replace		0.1					C

Section III. TOOLS AND TEST EQUIPMENT FOR KITCHEN, COMPANY LEVEL FIELD FEEDING AND KITCHEN, COMPANY LEVEL FIELD FEEDING –ENHANCED

(1) TOOL OR TEST EQUIPMENT REFERENCE CODE	(2) MAINTENANCE LEVEL	(3) NOMENCLATURE	(4) NATIONAL STOCK NUMBER	(5) TOOL NUMBER
1	C	Brush Wire Scratch	7920-00-291-5815	
2	C	Cleaner, Burner, Slot	5124-00-397-2490	
3	C	Screwdriver, Cross Tip	5120-0-234-8913	
4	C	Screwdriver, Flat Tip	5120-00-24-8862	
5	C	Wrench, Adjustable	5120-003035328	
6	C	Wrench, Combination	5120-00-303-7737	
7	O	Tool Kit, General Mechanic's Automotive	5180-00-177-7033	
8	O	Riveter Blind, Hand	5120-00-017-2849	
9	O	Shop Equipment, Automotive Maintenance and Repair: Organiz ational Maintenance Common No.1 Less Power	5180-00-699-5273	

Section IV. REMARKS FOR KITCHEN, COMPANY LEVEL FIELD FEEDING AND KITCHEN, COMPANY LEVEL FIELD FEEDING –ENHANCED

(1) REMARKS CODE	(2) REMARKS
A	Repair of fabric at organizational level is limited to the capability of the tentage repair kit.
B	Weld at Direct Support Maintenance Level
C	Refer to TM 10-7360-204-13&P for Maintenance Instructions
D	Rivet at Direct Support Maintenance Level
E	Service includes cleaning

APPENDIX C
REPAIR PARTS AND SPECIAL TOOLS LIST

SECTION I. INTRODUCTION

C-1. Scope. This Repair Parts and Special Tools List (RPSTL) lists and authorizes spares and repair parts; special tools; special test, measurement, and diagnostic equipment (TMDE); and other special support equipment required for performance of the Kitchen, Company Field Feeding (KCLFF) and the Kitchen, Company Level Field Feeding-Enhanced (KCLFF-E). It authorizes the requisitionioning, issue, and disposition of spares, repair parts and special tools as indicated by the source, maintenance and recoverability (SMR) codes.

C-2. GENERAL In addition to this section, Introduction, this Repair Parts and Special Tools List is divided Into the following sections:

a. Section II. Repair Parts List A list of spares and repair parts authorized by this RPSTL for use In the performance of maintenance. The list also includes parts which must be removed for replacement of the authorized parts. Parts lists are composed of functional groups in ascending alphanumeric sequence, with the parts In each group listed in ascending figure and item number sequence. Bulk materials are listed in item name sequence. Repair parts kits are listed separately in their own functional group within Section II. Items listed are shown on the associated illustration(s)/figure(s).

b. Section III. Special Tools List. A list of special tools, special TMDE, and other special support equipment authorized by this RPSTL (as indicated by Basis of Issue (BOI) information In DESCRIPTION AND USABLE ON CODE column) for the performance of maintenance.

c. Section IV. Cross-references Indexes A list, in National Item Identification Number (NIIN) sequence, of all National stock numbered items appearing in the listing, followed by a list In alphanumeric sequence of all part numbers appearing in the listings. National stock numbers and part numbers are cross-referenced to each illustration figure and item number appearance. The figure and item number index lists figure and item number In alphanumeric sequence and cross-references NSN, FSCM and part number.

C-3. EXPLANATION OF COLUMNS (SECTIONS II AND III).

a. ITEM NO. (Column (1)). Indicates the number used to Identify items called out in the illustration.

b. SMR Code (Column (2)). The Source, Maintenance, and Recoverability (SMR) code is a 5-position code containing supply/requisitioning Information, maintenance category authorization criteria, and disposition Instruc- tion, as shown In the following breakout:

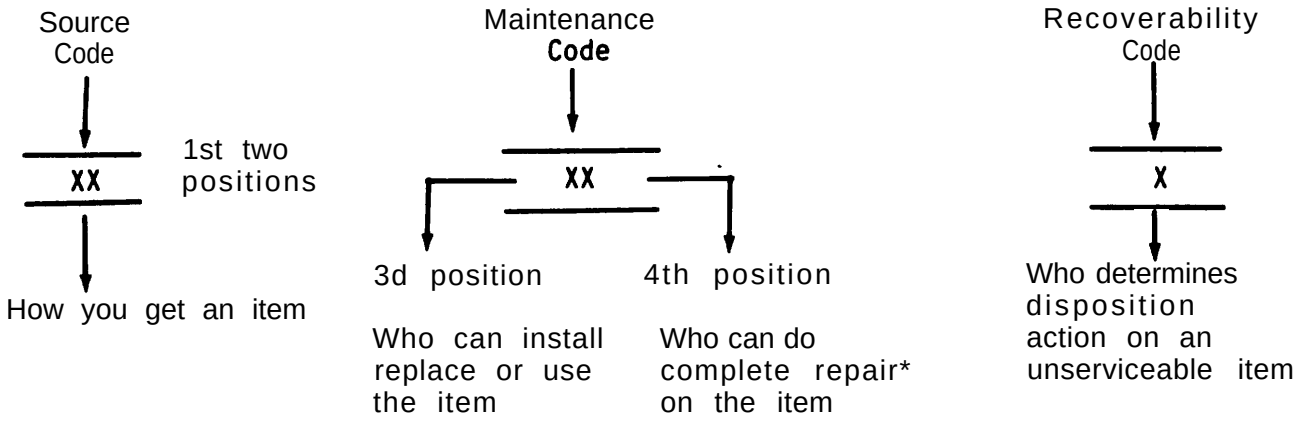

*Complete Repair: Maintenance capacity, capability, and authority to perform all corrective maintenance tasks of the "Repair" function in a use/user environment in order to restore serviceability to a failed item.

(1) Source Code. The source code tells you how to get an item needed for maintenance, repair, or overhaul of an end item/equipment. Explanations of source codes follows:

Code	Explanation
PA PB PC** PD PE PF PG	Stocked items; use the applicable NSN to request/requisition items with these source codes. They are authorized to the category indicated by the code entered in the 3d position of the SMR code. **NOTE : Items coded PC are subject to deterioration.
KD KF KB	Items with these codes are not to be requested/requisitioned individually. They are part of a kit which is authorized to the maintenance category indicated in the 3d position of the SMR code. The complete kit must be requisitioned and applied.

	Explanation
MO--(Made at org. AVUM Level MF--(Made at DS/ AVUM Level MH--(Made at GS Level) ML--Made at Specialized Repair Activity (SRA)) MD--(Made at Depot)	Items with these codes are not to be requested/requisitioned individually. They must be made from bulk material which is identified by the part number in the DESCRIPTION and USABLE ON CODE (UOC) column and listed in the Bulk Material group of the repair parts list in this RPSTL. If the item is authorized to you by the 3d position code of the SMR code, but the source code indicates it is made at a higher level, order the item from the higher level of maintenance.

	Explanation
AO--(Assembled by org/AVUM Level) AF--(Assembled by DS/AVIM Level) AH--(Assembled by GS Category) AL--(Assembled by SRA) AD--(Assembled by Depot)	Items with these codes are not to be requested/requisitioned individually. The parts that make up the assembled item must be requisitioned or fabricated and assembled at the level of maintenance indicated by the source code. If the 3d position code of the SMR code authorizes you to replace the item, but the source code indicates the items are assembled at a higher level, order the item from the higher level of maintenance.

Code	Explanation
XA	Do not requisition an "XA"-coded item. Order its next higher assembly. (Also, refer to the NOTE below.)
XB	If an "XB" item is not available from salvage, order it using the FSCM and part number given.
XC	Installation drawing, diagram, instruction sheet, field service drawing, that is identified by manufacturer's part number.
XD	Item is not stocked. Order an "XD"-coded item through normal supply channels using the FSCM and part number given, if no NSN is available.

NOTE

Cannibalization or controlled exchange, when authorized, may be used as a source of supply for items with the above source codes, except for those source coded "XA" or those aircraft support items restricted by requirements of AR 750-1.

(2) Maintenance Code. Maintenance codes tells you the level(s) of maintenance authorized to USE and REPAIR support items. The maintenance codes are entered in the third and fourth positions of the SMR code as follows:

(a) The maintenance code entered in the third position tells you the lowest maintenance level authorized to remove, replace, and use an item. The maintenance code entered in the third position will indicate authorization to one of the following levels of maintenance.

Code	Application/Explanation
C	--Crew or operator maintenance done within organizational or aviation unit maintenance.
O	--Organizational or aviation unit category can remove, replace, and use the item.
F	--Direct support or aviation intermediate level can remove, replace, and use the item.

H --General support level can remove, replace, and use the item.

L --Specialized repair activity can remove, replace, and use the item.

D --Depot level can remove, replace, and use the item.

(b) The maintenance code entered in the fourth position tells whether or not the item is to be repaired and identifies the lowest maintenance level with the capability to do complete repair (i.e., perform all authorized repair functions.) NOTE: Some limited repair may be done on the item at a lower level of maintenance, if authorized by the Maintenance Allocation Chart (MAC) and SMR codes. This position will contain one of the following maintenance codes.

Code	Application/Explanation
O	--Organizational or (aviation unit) is the lowest level that can do complete repair of the item.
F	--Direct support or aviation intermediate is the lowest level that can do complete repair of the item.
H	--General Support is the lowest level that can do complete repair of the item.
L	--Specialized repair activity is the lowest level that can do complete repair of the item.
D	--Depot is the lowest level that can do complete repair of the item.
Z	--Nonreparable. No repair is authorized.
B	--No repair is authorized. (No parts or special tools are authorized for the maintenance of a “B” coded item). However, the item may be reconditioned by adjusting, lubricating, etc., at the user level.

(3) Recoverability Code. Recoverability codes are assigned to items to indicate the disposition action on unserviceable items. The recoverability code is entered in the fifth position of the SMR Code as follows:

Recoverability Codes	Application/Explanation
Z	--Nonreparable item. When unserviceable, condemn and dispose of the item at the level of maintenance shown in 3d position of SMR Code.

Recoverability Codes	Application/Explanation
0	--Reparable item. When uneconomically reparable, condemn and dispose of the item at organizational or aviation unit level.
F	--Reparable item. When uneconomically reparable, condemn and dispose of the item at the direct support or aviation intermediate level.
H	--Reparable item. When uneconomically reparable, condemn and dispose of the item at the general support level.
D	--Reparable item. When beyond lower level repair capability, return to depot. Condemnation and disposal of item not authorized below depot level.
L	--Reparable item. Condemnation and disposal not authorized below specialized repair activity (SRA).
A	--Item requires special handling or condemnation procedures because of specific reasons (e.g., precious metal content, high dollar value, critical material, or hazardous material). Refer to appropriate manuals/directives for specific instructions.

c. FSCM (Column (3)). The Federal Supply Code for Manufacturer (FSCM) is a 5-digit numeric code which is used to identify the manufacturer, distributor, or Government agency, etc., that supplies the item.

d. PART NUMBER (Column (4)). Indicates the primary number used by the manufacturer, (individual, company, firm, corporation, or Government activity), which controls the design and characteristics of the item by means of its engineering drawings, specifications standards, and inspection requirements to identify an item or range of items.

NOTE

When you use an NSN to requisition an item, the item you receive may have a different part number from the part ordered.

e. DESCRIPTION AND USABLE ON CODE (UOC) (Column (5)). This column includes the following information:

(1) The Federal item name and, when required, a minimum description to identify the item.

(2) The physical security classification of the item is indicated by the parenthetical entry, e.g., Phy Sec Cl - Confidential, Phy Sec C1 (S) - Secret, Phy Sec C1 (T) - Top Secret.

(3) Items that are included in kits and sets are listed below the name of the kit or set.

(4) Spare/repair parts that make up an assembled item are listed immediately following the assembled item line entry.

(5) Part numbers for bulk materials are referenced in this column in the line item entry for the item to be manufactured/fabricated.

(6) When the item is not used with all serial numbers of the same model, the effective serial numbers are shown on the last line(s) of the description (before UOC).

(7) The usable on code, when applicable (see paragraph 5, Special Information).

(8) In the Special Tools List section, the basis of issue (BOI) appears as the last line(s) in the entry for each special tool, special TMDE, and other special support equipment. When density of equipments supported exceeds density spread indicated in the basis of issue, the total authorization is increased proportionately.

(9) The statement "END OF FIGURE" appears just below the last item description in Column 5 for a given figure in both Section II and Section III.

(10) The indenture, shown as dots appearing before the repair part, indicates that the item is a repair part of the next higher assembly.

f. QTY (Column (6)). The QTY (quantity per figure column) indicates the quantity of the item used in the breakout shown on the illustration figure, which is prepared for a functional group, subfunctional group, or an assembly. A "V" appearing in this column in lieu of a quantity indicates that the quantity is variable and may vary from application to application.

C-4. EXPLANATION OF COLUMNS (SECTION IV).

a. NATIONAL STOCK NUMBER (NSN) INDEX.

(1) STOCK NUMBER column. This column lists the NSN by National item identification number

(NIIN) sequence. The NIIN consists of the last nine digits of the NSN, i.e. $\overline{(5305\text{-}\underline{01\text{-}574\text{-}1467}}$).

NSN

NIIN

When using this column to locate an item, ignore the first 4 digits of the NSN. However, the complete NSN should be used when ordering items by stock number.

(2) FIG. column. This column lists the number of the figure where the item is identified/located. The figures are in numerical order in Section II and Section III.

(3) **ITEM column.** The item number identifies the item associated with the figure listed in the adjacent FIG. column. This item is also identified by the NSN listed on the same line.

b. PART NUMBER INDEX. Part numbers in this index are listed by part number in ascending alphanumeric sequence (i.e., vertical arrangement of letter and number combination which places the first letter or digit of each group in order A through Z, followed by the numbers 0 through 9 and each following letter or digit in like order).

(1) **FSCM column.** The Federal Supply Code for Manufacturer (FSCM) is a 5-digit numeric code used to identify the manufacturer, distributor, or Government agency, etc., that supplies the item.

(2) **PART NUMBER column.** Indicates the primary number used by the manufacturer (individual, firm, corporation, or Government activity), which controls the design and characteristics of the item by means of its engineering drawings, specifications standards, and inspection requirements to identify an item or range of items.

(3) **STOCK NUMBER column.** This column lists the NSN for the associated part number and manufacturer identified in the PART NUMBER and FSCM columns to the left.

(4) **FIG. column.** This column lists the number of the figure where the item is identified/located in Sections II and III.

(5) **ITEM column.** The item number is that number assigned to the item as it appears in the figure referenced in adjacent figure number column.

c. FIGURE AND ITEM NUMBER INDEX.

(1) **FIG. column.** This column lists the number of the figure where the item is identified/located in Section II and III.

(2) **ITEM column.** The item number is that number assigned to the item as it appears in the figure referenced in the adjacent figure number column.

(3) **STOCK NUMBER column.** This column lists the NSN for the item.

(4) **FSCM column.** The Federal Supply Code for Manufacturer (FSCM) is a 5-digit numeric code used to-identify the manufacturer; distributor, or Government agency, etc., that supplies the item.

(5) **PART NUMBER column.** Indicates the primary number used by the manufacturer (individual, firm, corporation, or Government activity), which controls the design and characteristics of the item by means of its engineering drawings, specifications standards, and inspection requirements to identify an item or range of items.

C-5. SPECIAL INFORMATION.

a. USABLE ON CODE. The usable on code appears in the lower left comer of the Description column heading. Usable on codes are shown as "UOC: EDE' for the Kitchen, Company Level Field Feeding (KCLFF) and 'UOC: FHE' for the Kitchen, Company Level Field Feeding-Enhanced (KCLFF-E) in the Description Column on the last line appli cable item description/nomenclature. Uncoded items are applicable to all models.

b. ASSOCIATED PUBUCATIONS. The publication listed below pertains to the Kitchen, Company Level Field Feeding (KCLFF and KCLFF-E).

Publication	Short Tile
TM 10-7360-204-13&P	Range Outfit, Field Gasoline, Model M59, Burner Unit, Gasoline Models M2 and M2A

C-6. HOW TO LOCATE REPAIR PARTS.

a. When National Stock Number or Part Number ia NOT Known.

(1) First. Using the table of contents, determine the assembly group or subassembly group to which the item belongs. This is necessary since figures are prepared for assembly groups and subassembly groups, and listings are divided into the same groups.
(2) Second. Find the figure covering the assembly group or subassembly group to which the item belongs.
(3) Third. Identity the item on the figure and note the item number.
(4) Fourth. Refer to the Repair Parts List for the figure to find the part number for the item number noted C on the figure.
(5) Fifth. Refer to the Part Number Index to find the NSN, if assigned.

b. When National Stock Number or Part Number is Known.

(1) First. Using the Index of National Stock Numbers and Part Numbers, fine the pertinent National Stock Number or Part Number. The NSN index is in National Item Identification Number (NIIN) sequence (see 4a(1)). The part numbers in the Part Number Index are listed in ascending alphanumeric sequence (see paragraph 4b). Both indexes cross-reference you to the illustration figure and item number of the item you are looking for.
(2) Second. After finding the figure and item number, verify that the item is the one you are looking for, then locate the item number in the repair parts list for the figure.

C-7. ABBREVIATIONS. Abbreviations used in this manual are listed in MIL-STD-12.

Al data on C-9 is deleted

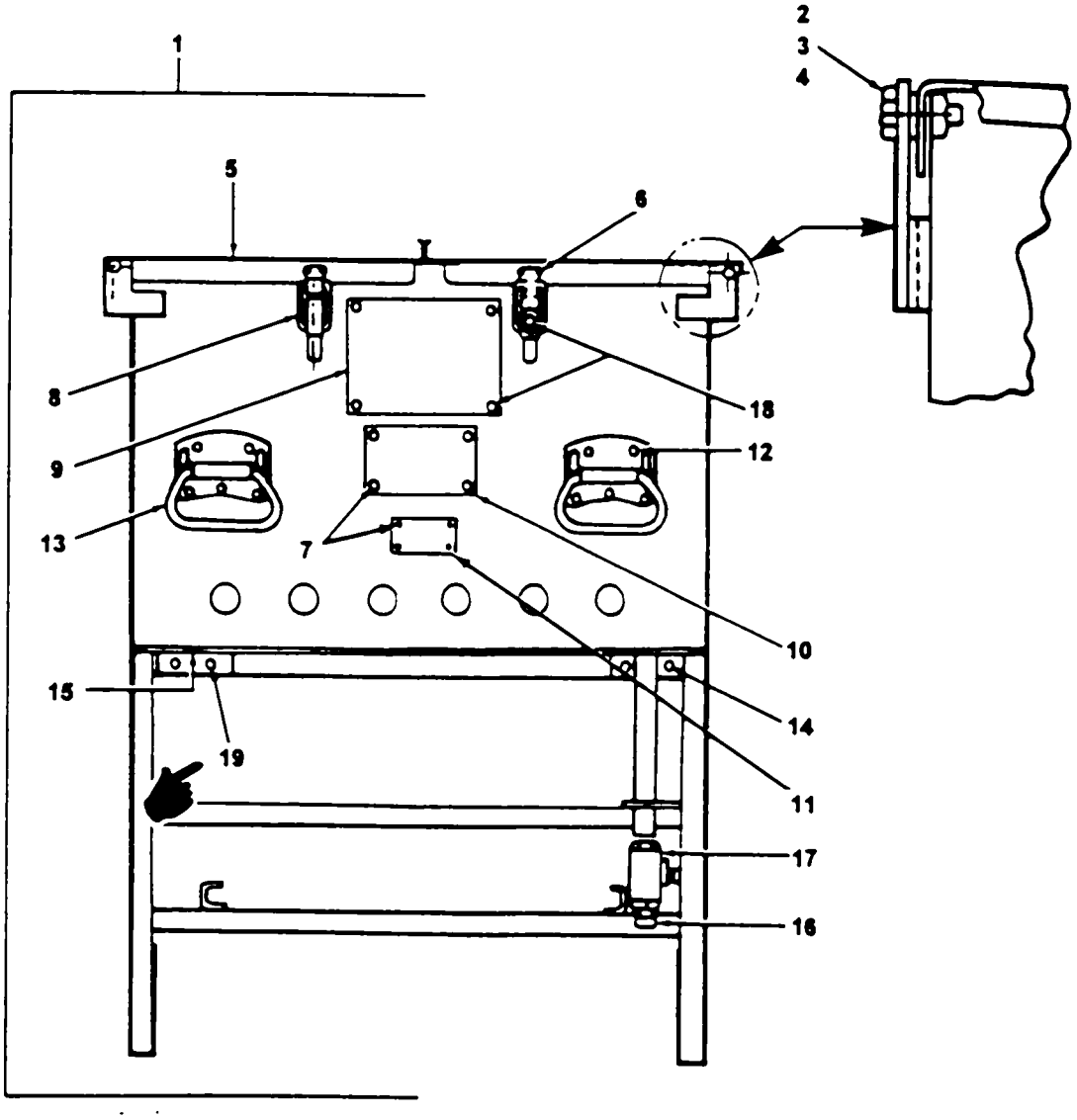

Figure C-1. Heater Tank Assembly

(1) ITEM NO	(2) SMR CODE	(3) FSCM	(4) PART NUMBER	(5) DESCRIPTION AND USABLE ON CODES (UOC)	(6) QTY
			GROUP 00	**KITCHEN, COMPANY LEVEL FIELD FEEDING**	
			GROUP 01	**HEATER TANK ASSEMBLY**	
1	PAOFF	81337	5-13-3721	TANK ASSEMBLY, HEATER	1
2	PAOZZ	96906	MS17830-4C	NUT, SELF-LOCKING, HEX	4
3	PAOZZ	88044	AN960-C416	WASHER, FLAT	8
4	PAOZZ	96906	MS35307-306	.SCREW, CAE, HEXIGON HEAD	4
5	PAFFF	81337	5-13-3732	COVER, TANK, TRAY-PAC	2
6	PAFZ	96906	MS20426AD6-5	RIVET, SOUD	8
7	PAFZZ	81349	M24243/1-B403	.RIVET, BUND	8
8	PAFZZ	14608	641-US2G	.CATCH, FRICTION	4
9	PAFZZ	81337	5-13-3771	PLATE, INSTRUCTION	1
10	PAFZZ	81337	5-13-3773	SIGN, HOT	4
11	XDFZZ	81337	5-13-3967	.PLATE, DATA NAME	1
12	PAOZZ	96906	MS24617-44	SCREW, TAPPING, THREATED	20
13	PAOZZ	96906	MS35791-2	HANDLE, BAIL	4
14	XDFZZ	81337	5-13-3733	.REFLECTOR, HEAT, HEATER FRAME, RH	1
15	XDFZZ	81337	5-13-3769	.REFLECTOR, HEAT, HEATER FRAME, LH	1
16	PAOZZ	81337	5-13-3753	ADAPTER, STRAIGHT, PI	1
17	PAOZZ	79227	B6000 3/4	.VALVE, BALL	1
18	PAFZZ	96906	MS20604B6W4	.RIVET, BUND	16
19	PAFZZ	96906	MS24662-173	RIVET BUND	8

END OF FIGURE

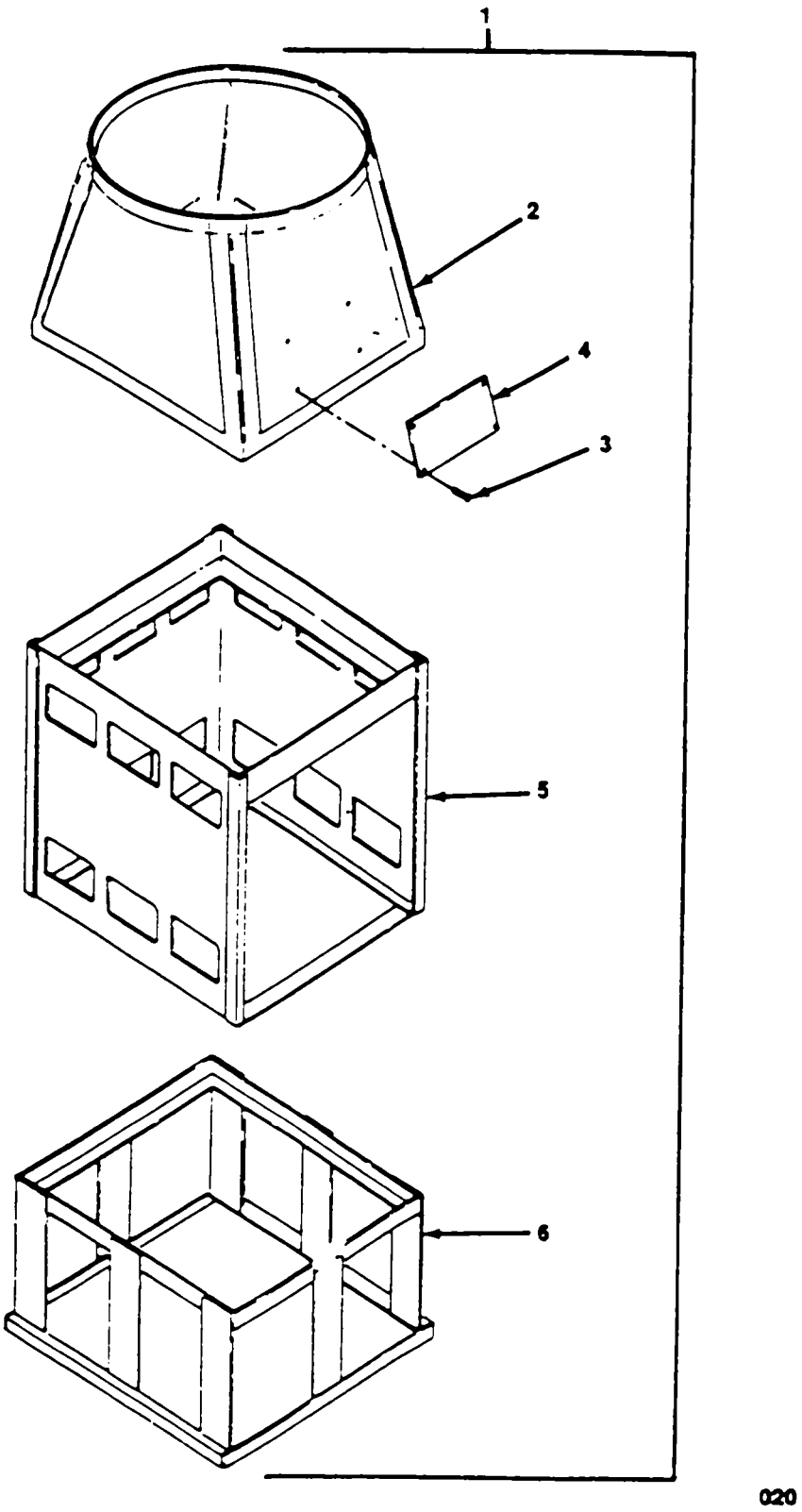

Figure C-2. Cooking Pot Cradle Assembly

(1) ITEM NO	(2) SMR CODE	(3) FSCM	(4) PART NUMBER	(5) DESCRIPTION AND USABLE ON CODES (UOC)	(6) QTY
			GROUP 02	**COOKING POT CRADLE ASSEMBLY**	
			FIG. C-2	**COOKING POT CRADLE ASSEMBLY**	
1	PAOFF	81337	5-133991	CRADLE ASSEMBLY, COOKING	1
2	PAOFF	81337	5-133886	.CRADLE, COOKING POT	1
3	PAFFF	81349	M2424B/6-A401H	..RIVET, BUND	8
4	PAFZZ	81337	5-13-3773	..SIGN, BE HOT	2
5	PAOFF	81337	5-133875	.RACK, BURNER	1
6	PAOFF	81337	5-13-3868	.RACK, BASE	1

END OF FIGURE

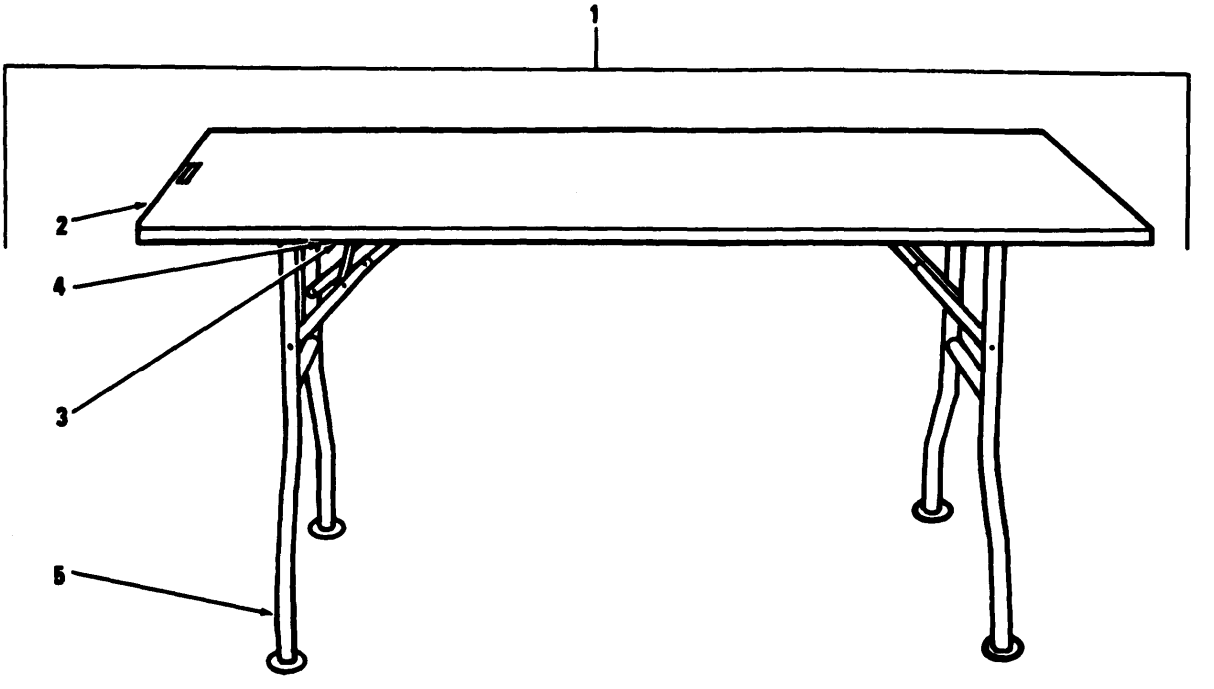

Figure C-3. Table Assembly

(1) ITEM NO	(2) SMR CODE	(3) FSCM	(4) PART NUMBER	(5) DESCRIPTION AND USABLE ON CODES (UOC)	(6) QTY
			GROUP 03	TABLE ASSEMBLY	
			FIG. C-3	TABLE ASSEMBLY	
1	PAOFF	81337	5-133751	TABLE, FOLDING LEGS	1
2	XAOZZ	81337	5-13-3739	.TABLE TOP	1
3	PAOZZ	96906	MS51971-1	NUT, PLAIN, HEXAGON	8
4	PAOZZ	96906	MS35335-61	WASHER, LOCK	8
5	PAOFF	81337	5-13-3738	.LEGS, TABLE, FOLDING	2

END OF FIGURE

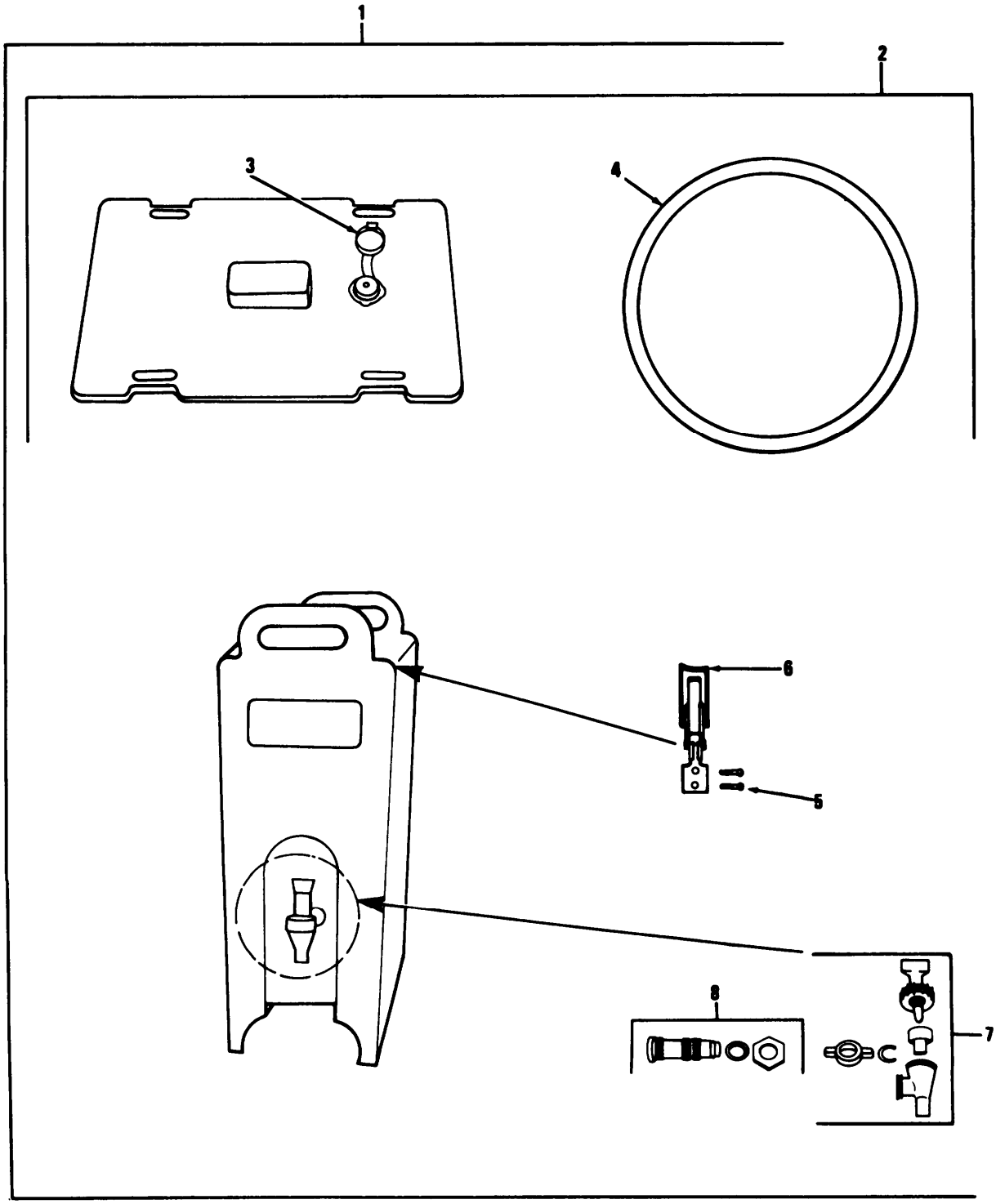

Figure C-4. Dispenser, Liquid, Insulated

(1) ITEM NO	(2) SMR CODE	(3) FSCM	(4) PART NUMBER	(5) DESCRIPTION AND USABLE ON CODES (UOC)	(6) QTY
			GROUP 04	DISPENSER, UQUID, INSULATED	
			FIG. C4	DISPENSER, LIQUID, INSULATED	
1	PAOOZ	21669	500LCD-G	DISPENSER, UQUID, INSULATED	4
2	PAOOO	21669	63226G	UD ASSEMBLY, UQUID	1
3	PAOZZ	21669	14200	CAP VENT, DISPENSER	1
4	PAOZZ	21669	12101	GASKET	1
5	PAOZZ	96906	MS51861-25C	SCREW, TAPPING, THREADED	8
6	PAOZZ	21669	60028	CATCH, FLUSH	4
7	PAOZZ	21669	46002	FAUCET ASSEMBLY, POR	1
8	PAOZZ	21669	64003	SPOUT ASSEMBLY, DISP	1

END OF FIGURE

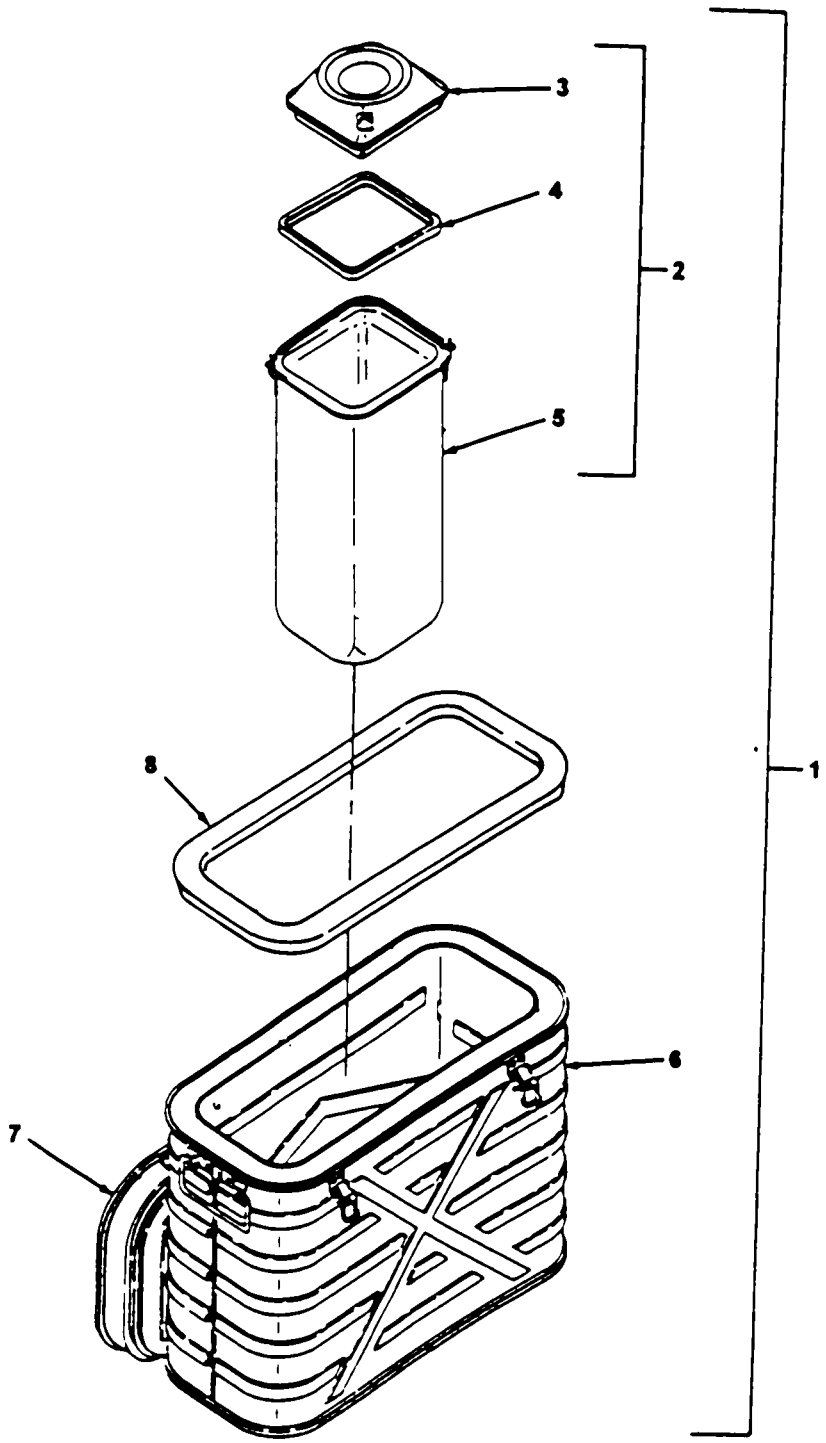

Figure C-5. Food Container, Insulated

(1) ITEM NO	(2) SMR CODE	(3) FSCM	(4) PART NUMBER	(5) DESCRIPTION AND USABLE ON CODES (UOC)	(6) QTY
			GROUP 05	**FOOD CONTAINER, INSULATED**	
			FIG. C-5	**FOOD CONTAINER, INSULATED**	
1	PAOOZ	81349	MIL-F-10670	FOOD CONTAINER, INSULATED	1
2	PAOZZ	81337	2-9-112-4	.INSERT. INSULATED	3
3	PAOOZ	81337	2-911242	..INSERT, UD	3
4	PAOZZ	81337	2-9-11246	GAS UD	3
5	XAOZZ	81337	2-9-1121	..INSERT ASSEMBLY	3
6	XAOZZ	81337	2-9-1102	BODY ASSEMBLY	1
7	PAOZZ	81337	2-9-110-3	COVER ASSEMBLY	1
8	PAOZ7	81337	2-9-110-3-5	..SEAL, CONTAINER	1

END OF FIGURE

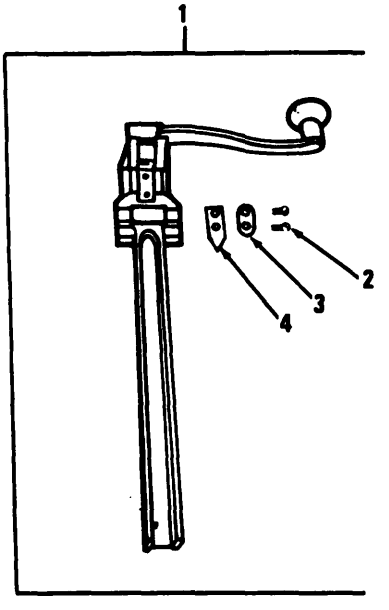

Figure C-6. Opener, Can, Mounted

(1) ITEM NO	(2) SMR CODE	(3) FSCM	(4) PART NUMBER	(5) DESCRIPTION AND USABLE ON CODES (UOC)	(6) QTY
				GROUP 06 OPENER, CAN, MOUNTED	
				FIG. C-6 OPENER, CAN, MOUNTED	
1	PAOOO	83190	1-W	OPENER, CAN, MOUNTED	1
2	PAOZZ	906	MS511957	SCREW, MACHINE	2
3	PAF77	83190	I SUPPORT PLATE	.I SUPPORT PLATE	1
4	PAOZZ	83190	K004	.BLADE, MOUNTED, CAN OPENER	1
				END OF FIGURE	

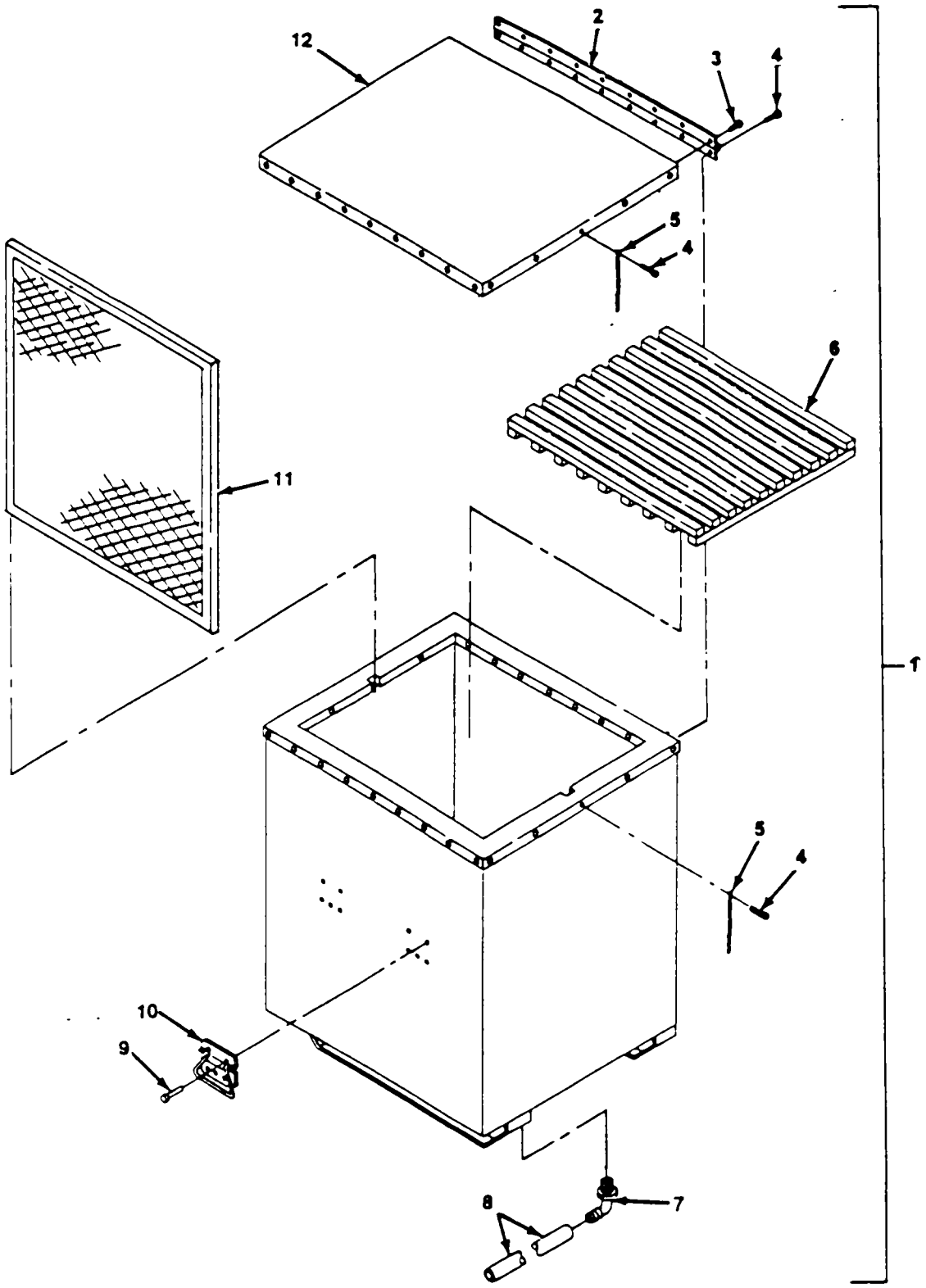

023

Figure C-7. Chest, Ice Storage

(1) ITEM NO	(2) SMR CODE	(3) FSCM	(4) PART NUMBER	(5) DESCRIPTION AND USABLE ON CODES (UOC)	(6) QTY
			GROUP 07	CHEST, ICE STORAGE	
			FIG. C-7	CHEST, ICE STORAGE	
1	PAOFF	81337	5-13-2544G1	CHEST, ICE STORAGE (FHE)	1
2	XDFZZ	81337	5-13-2544P8	HINGE, BUTT (FHE)	1
3	XDOZZ	96906	MS51862-6C	SCREW (FHE)	28
4	XDFZZ	81349	M24243/1-602	RIVET (FHE)	37
5	XDFZZ	19203	8850124	CHAIN (12 in.) (FHE)	V
6	PBOZZ	81337	5-13-2544P14	FLOOR BOARD (FHE)	1
7	PBOZZ	55732	N401	ELBOW (FHE)	1
8	PBOZZ	81337	5-13-2544P19	HOSE.DRAIN (5/8 in. I.D. x 1/8 In. x 6 ft.) (FHE)	1
9	XDFZZ	81349	M24243/A616	RIVET (FHE)	20
10	XDFZZ	98003	H4734SSW2-G	HANDLE (FHE)	4
11	PBOZZ	81337	5-13-2545G2	DIVIDER (FHE)	1
12	PBOZZ	81337	5-13-2545G1	UD ASSEMBLY (SEE FIG. C-8 FOR BREAKDOWN) (FHE)	1
				END OF FIGURE	

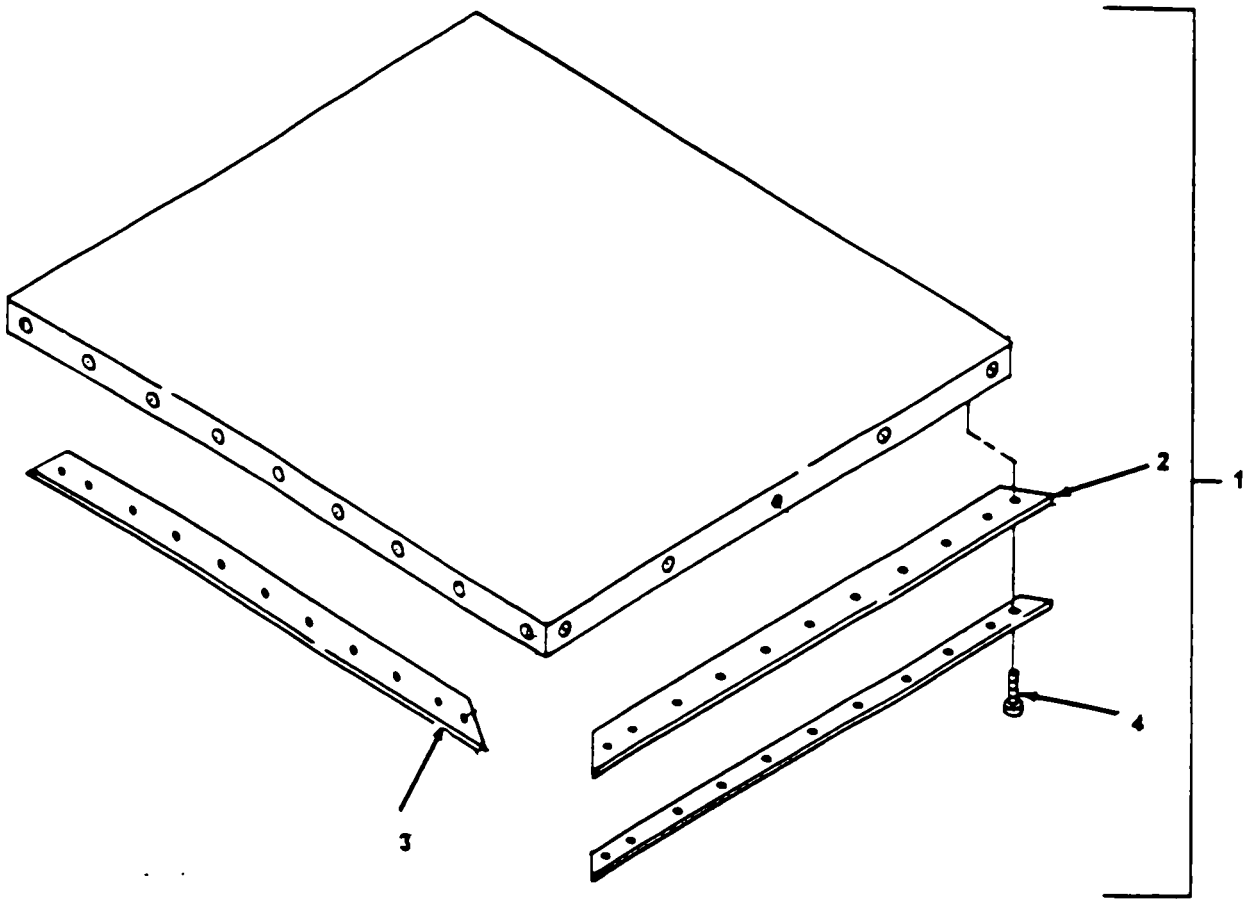

024

Figure C-8. Lid Assembly

(1) ITEM NO	(2) SMR CODE	(3) FSCM	(4) PART NUMBER	(5) DESCRIPTION AND USABLE ON CODES (UOC)	(6) QTY
			GROUP 0701	UD ASSEMBLY	
			FG. C-8	UD ASSEMBLY	
1	PBOZZ	81337	5-13-2545G1	LID ASSEMBLY ..... (FHE)	1
2	MOOZZ	74951	5-13-2545P14	.GASKET MAKE FROM BULK GASKET..... MATERIAL, CUT TO 23-3/4 IN LONG, MITER 45 DEGREES (FHE)	1
3	MOOZZ	74951	5-13-2545P15	.GASKET MAKE FROM BULK GASKET..... MATERIAL, CUT TO 27-3/4 IN LONG, MITER 45 DEGREES (FHE)	1
4	PAOZZ	96906	MS51861-25C	.SCREW ..... (FHE)	44

END OF FIGURE

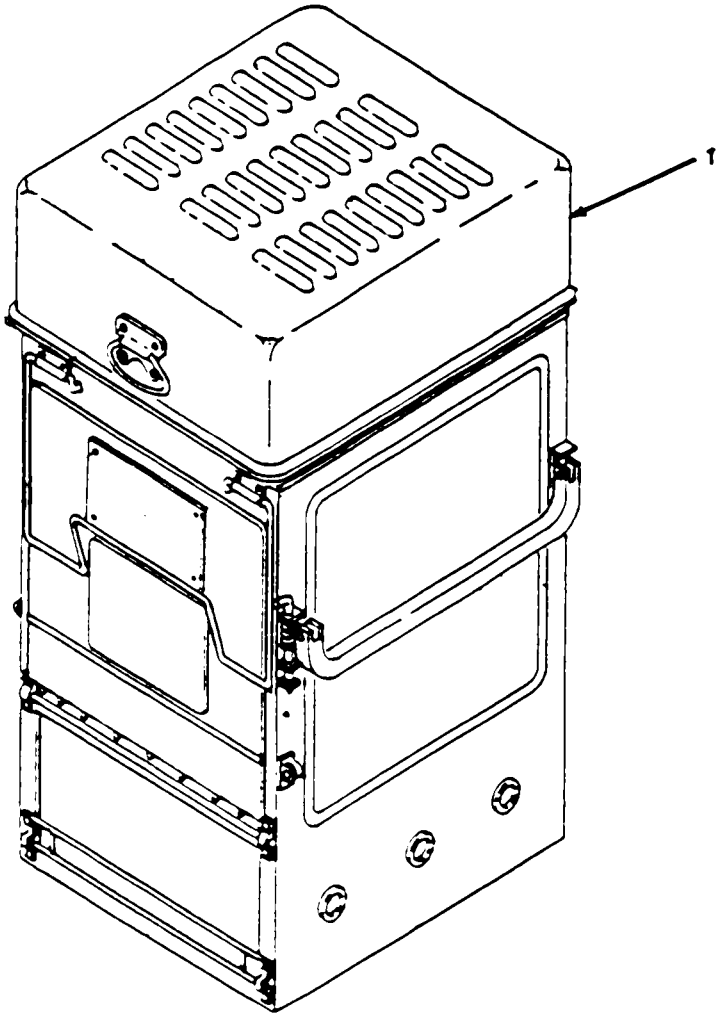

026

Figure C-9. Cabinet, Gasoline, Field Range Outfit M59.

(1) ITEM NO	(2) SMR CODE	(3) FSCM	(4) PART NUMBER	(5) DESCRIPTION AND USABLE ON CODES (UOC)	(6) QTY
			GROUP 08	M59 GASOLIUNE FIELD RANGE OUTFIT CABINET	
			FIG. C-9	M59 GASOLINE FIELD RANGE OUTFIT CABINET	
1	PAOFF	81349	M14601-1	CABINET, GASOUNE, FIELD RANGE OUTFIT M59 ..... (FHE)	1
				END OF FIGURE	

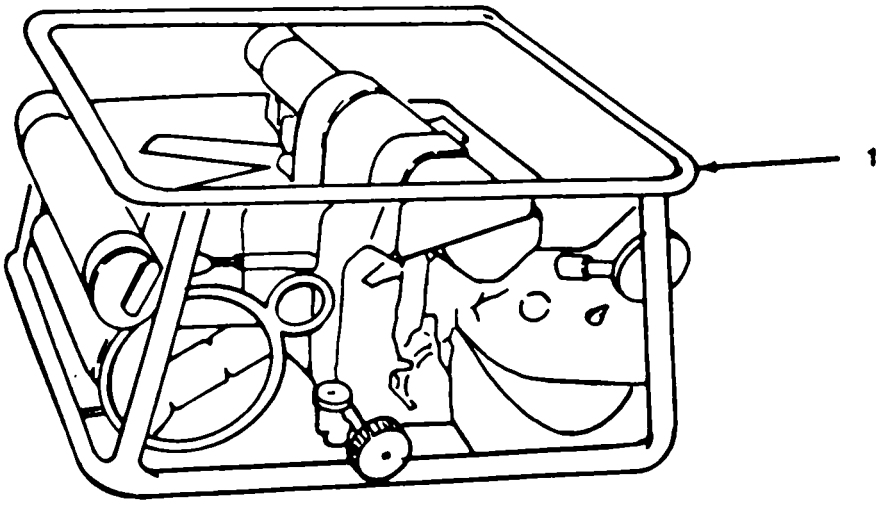

027

Figure C-10. Burner Unit, Gasoline, M2A

(1) ITEM NO	(2) SMR CODE	(3) FSCM	(4) PART NUMBER	(5) DESCRIPTION AND USABLE ON CODES (UOC)	(6) QTY
			GROUP 09 FIG. C-10	M2A GASOUNE BURNER UNIT M2A GASOUNE BURNER UNIT	
1	PAOOO	81349	MIL-B40098	BURNER UNIT, GASOUNE, M2A ..... (FHE)	1
				END OF FIGURE	

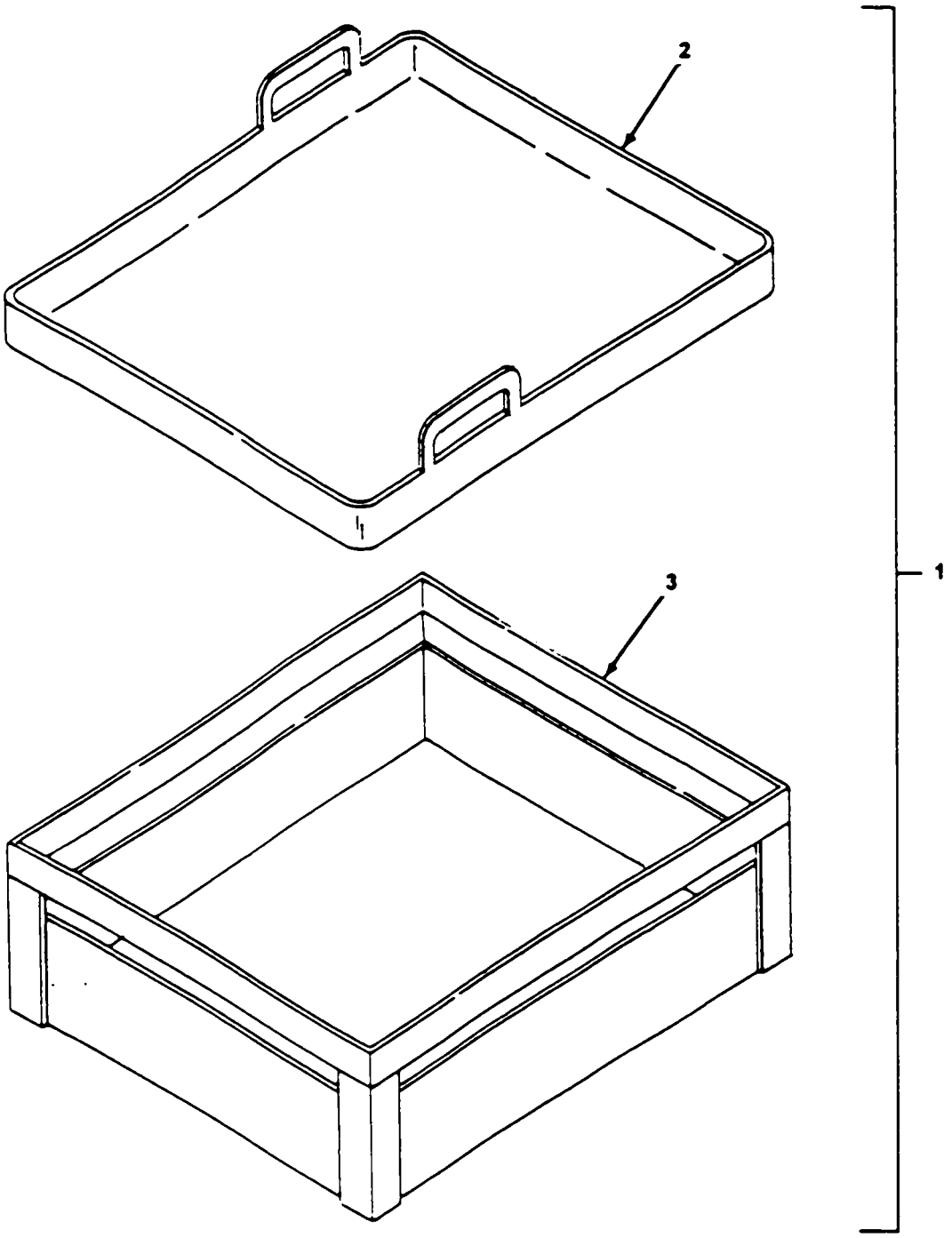

025

Figure C-11. Griddle Assembly

(1) ITEM NO	(2) SMR CODE	(3) FSCM	(4) PART NUMBER	(5) DESCRIPTION AND USABLE ON CODES (UOC)	(6) QTY
			GROUP 010	GRIDDLE ASSEMBLY	
			FIG. C-11	GRIDDLE ASSEMBLY	
1	PAOFF	81337	5-13-2625	GRIDDLE ASSEMBLY..... (FHE)	1
2	XDOZZ	81337	5-13-5626-1	GRIDDLE..... (FHE)	1
3	XAOFF	81337	513-5627-1	BASE,GRIDDLE ..... (FHE)	1
				END OF FIGURE	

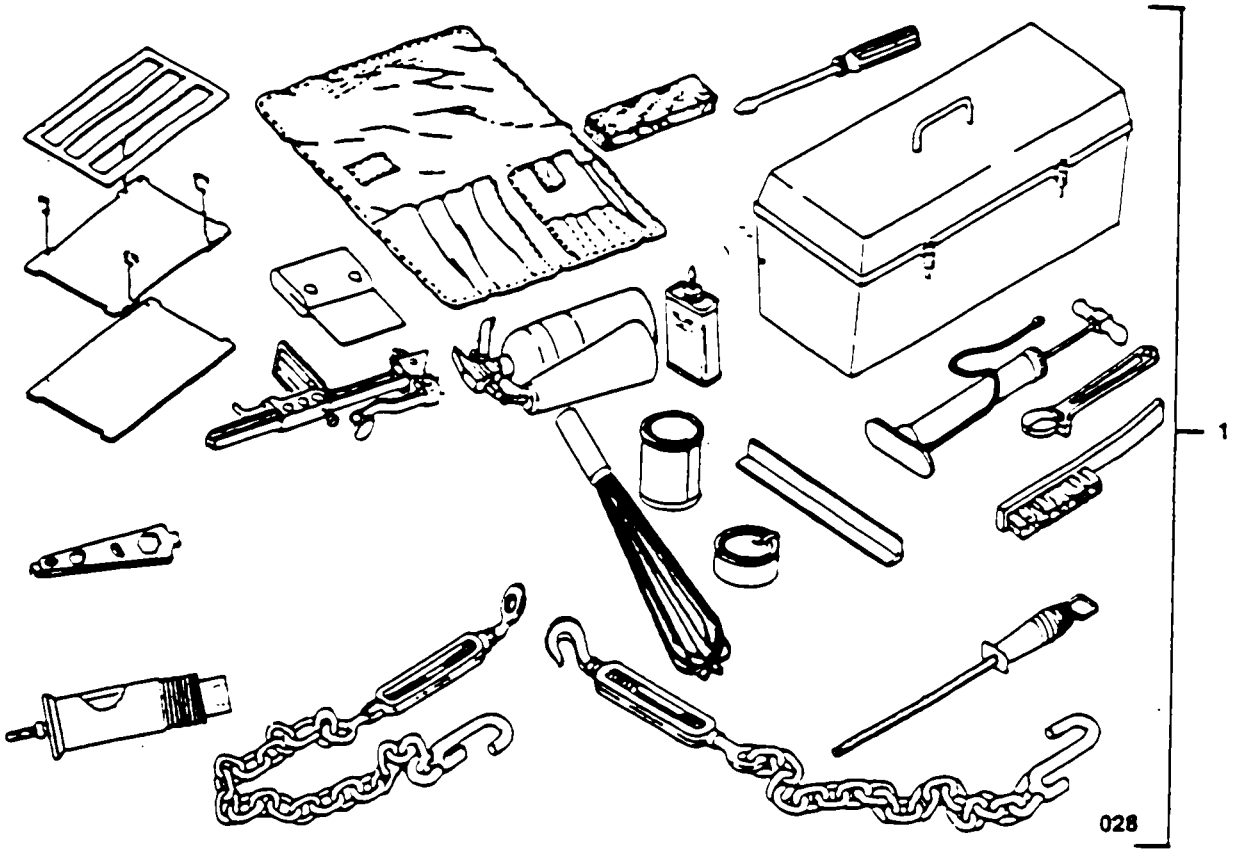

Figure C-12. Accessory Outfit, Gasoline, Field Range, With Baking Racks.

(1) ITEM NO	(2) SMR CODE	(3) FSCM	(4) PART NUMBER	(5) DESCRIPTION AND USABLE ON CODES (UOC)	(6) QTY
			GROUP 11	GASOUNE FIELD RANGE ACCESSORY OUTFIT WITH BAKING RACKS	
			FIG. C-12	GASOUNE FIELD RANGE ACCESSORY OUTFIT WITH BAKING RACKS	
1	POAZ7	81349	M14601-2	ACCESSORY OUTFIT, GASOUNE, FIELD RANGE, WITH BAKING RACKS (FHE)	1
				END OF FIGURE	

(1) ITEM NO	(2) SMR CODE	(3) FSCM	(4) PART NUMBER	(5) DESCRIPTION AND USABLE ON CODES (UOC)	(6) QTY
			GROUP12	BULK	
			FIG. BULK	BULK	
1	PAOZZ	74951	V-1234-25	GASKET, RUBBER ..... (FHE)	1
				END OF FIGURE	

SECTION III. SPECIAL TOOLS LIST
(Not Applicable)

CROSS- REFERENCE-INDEXES
NATIONAL STOCK NUMBER INDEX

STOCK NUMBER	FIG.	ITEM
4010-2289943	C-7	5
4110-00-045-1800	C-7	6
4110-01-042487	C-7	1
4110-01)455679	C-7	12
411 0-01-0455679	C-8	1
4720-01 44821 5	C-7	8
4730-01-0463525	C-7	7
4730-01-241-3444	C-1	16
4820-G-902-2892	C-1	17
5305-OG-050-9228	C-6	2
5305S-52-8240	C-1	12
5305-00-497-7401	C-4	5
530540-497-7401	C-8	4
5305-00-497-7406	C-7	3
5305-0-7024523	C-1	4
5310-00-2416604	C-1	2
5310-00-527-3634	C-3	4
5310-0531-9515	C-1	3
531-OG-903-5966	C-3	3
5320--090-4136	C-1	7
5320-00-117-7285	C-1	6
5320-00-417-5827	C-2	3
532G0-957-5819	C-1	198
532001-192-2248	C-1	19
532(0-1-197-1605	C-7	9
53300-X32-2721	C-5	4
533G-01-255-2588	C-4	4
5330-01-391-2800	BULK	1
5340-00-351-4099	C-7	10
s5340-0-4840383	C-1	8
5340-)-682-1502	C-1	13
5340-01-2496786	C-4	6
7105-01-250-0086	C-3	1
7310-01-113-9172	C-10	1
7310-01-245-6937	C-4	1
7310-01-391-3065	C-11	1
7320-01-213-6160	C-4	3
7320-01 -245-9048	C-4	7
7320-01-255-8174	C-4	2
7330-00238-241 1	C-5	1
733O-0-243-3253	C-5	2
733O-0-243-3253	C-5	3
7330-01-234-2204	C-6	4
7330-01-248-9964	C-2	1
7330-01-249-1959	C-2	2
733001-250-7730	C-4	8
7360-00-082-2153	C-9	1
7360-01-248-5292	C-1	5
73601-248601	C-1	1
736001-2733	C-6	3
73 -25349	-2	5
7360-01-360	C-3	5
736001-2505	C-2	6
719201-23521	C-5	8
9905-01-2488730	C-1	10
9905-1-24830	C-2	4
990501-2489907	C-1	9
76901-223-2521	C-5	8
9905-01-2488730	C-1	10
9905-01-2488730	C-2	4
9905-01-248-9907	C-1	9

NATIONAL STOCK NUMBER AND PART NUMBER INDEX
PART NUMBER INDEX

FSCM	PART NUMBER	STOCK NUMBER	FIG.	ITEM
88044	AN960-C416	5310-0531-9515	C-1	3
79227	B-60000 3/4	4820-00-902-2892	C-1	17
98003	H4734SSW2G	5340-00-351-4099	C-7	10
83190	I SUPPORT PLATE	7360-01-248-8733	C-6	3
83190	K004	7330-01-234-2204	C-6	4
81349	M24243/1-A616	5320-01-197-1605	C-7	9
81349	M24243/1-602		C-7	4
81349	M24243/1-606		C-7	11
81349	MIL-B-40098	7310-01-113-9172	C-10	1
81349	MIL-F-10870	7330-0023&2411	C-5	1
96906	MS20604B6W4	5320-00-957-5819	C-i	18
96906	MS51957-62	5305-00-050-9228	C-6	2
96906	MS35335-61	53100-527-3634	C-3	4
96906	MS24617-44	5305-00-052-8240	C-1	12
96906	MS51861-25C	5305-00-497-7401	C-4	5
96906	MS51861-25C	5305-00-497-7401	C-8	4
96906	MS51862-6C	5305-00-497-7406	C-7	3
96906	MS20426AD6-5	5320-00-117-7285	C-1	6
96906	MS17830-4C	5310-00-241-6604	C-i	2
96906	MS35791-2	5340-00-682-1502	C-i	13
96906	MS51971-1	5310-00-903-5966	C-3	3
96906	MS24243/1 -B403	5320-00-090-4136	C-i	7
96906	MS24662/6	5320-00-417-5827	C-2	3
96906	MS24662-173	5320-01-192-2248	C-1	19
96906	MS35307-306	5305-00-702-4523	C-i	4
81349	M14601-1	7360-00-082-2153	C-9	1
55732	N401	4730-01-046-3525	C-7	7
74951	V-1234-25	5330-01-391-2800	BULK	1
21669	12101	5330-01-255-2588	C-4	4
21669	14200	7320-01-213-6160	C-4	3
81390	1 -W	7330-01-236-3155	C-6	1
81337	2-9-110-2		C-5	6
81337	2-9-110-3		C-5	7
81337	2-9-110-3-5	7690-01-223-2521	C-5	8
81349	2-9-112-4	7330-00-243-3253	C-5	2
81337	2-9-112-4-1		C-5	5
81349	2-9-112-4-2	7330-00-243-3253	C-5	3
81337	2-9-112-4-6	5330-00-032-2721	C-5	4
81337	5-13-5627-1		C-11	3
81337	5-13-5626-1		C-11	2
81337	5-13-5625	7310-01-391-3065	C-11	1
81337	5-13-3991	7330-01-248-9964	C-2	1
81337	5-13-3967		C-1	11
81337	5-13-3967		C-1	15
81337	5-13-3886	7330-01-249-1959	C-2	2
81337	5-13-3875	7360-01-250-3649	C-2	5
81337	5-13-3868	7360-01-250-3652	C-2	6
81337	5-13-3773	9905-01-248-8730	C-i	10
81337	5-13-3773	9905-01-248-8730	C-2	4

NATIONAL STOCK NUMBER AND PART NUMBER INDEX
PART NUMBER INDEX

FSCM	PART NUMBER	STOCK NUMBER	FIG.	ITEM
81337	5-13-3771	995-01-248-9907	C-1	9
81337	5-13-3753	4730-01-241-3444	C-1	16
81337	5-13-3751	7105-01-25086	C-3	1
81337	5-13-3739		C-3	2
81337	5-13-3738	7360-01-2503650	C-3	5
81337	5-13-3733		C-1	14
81337	5-13-3732	7360-01-248-5292	C-1	5
81337	5-13-3721	7360-01-2486041	C-1	1
81337	5-13-2545G1	4110-0145-5679	C-7	12
81337	5-13-2545G1	41101-0455679	C-8	1
81337	5-13-2544G1	4110-01-4 2487	C-7	1
81337	5-13-2544P8		C-7	2
81337	5-13-2544P14	4110G-045-1800	C-7	6
81337	5-13-2545P14		C-8	2
81337	5-13-2545P15		C-8	3
81337	5-13-2544P19	4720-01448215	C-7	8
21669	46002	7320-01-245-9048	C-4	7
21669	500LCD-G	7310-01-245-6937	C-4	1
21669	60028	534041 -2496786	C-4	6
21669	63226--G	7320-01-255-8174	C-4	2
21669	64003	7330-01-250-7730	C-4	8
14608	641 -US2G	5340-00-480383	C-1	8
19203	8850124	4010-0-228-9943	C-7	5

CROSS-REFERENCE INDEXES

FIGURE AND ITEM NUMBER INDEX

FIG.	ITEM	STOCK NUMBER	FSCM	PART NUMBER
C-1	1	7360-01-248-6041	81337	5-13-3721
C-1	2	5310-00-241 6604	96906	MS17830-4C
C-i	3	5310-00-531-9515	88044	AN960-C416
C-1	4	5305-00-702-4523	96906	MS35307-306
C-1	5	7360-01-248-5292	81337	5-13-3732
C-1	6	5320-00-117-7285	96906	MS20426AD6-5
C-1	7	5320-00-090-4136	96906	MS24243/1-B403
C-1	8	5340-00-484-0383	14608	641 -US2G
C-1	9	9905-01-248-9907	81337	5-13-3771
C-1	10	9905-01-248-8730	81337	5-13-3773
C-1	11		81337	5-13-3967
C-1	12	5305-00-052-8240	96906	MS24617-44
C-1	13	5340-00-682-1502	96906	MS35791-2
C-1	14		81337	5-13-3733
C-1	15		81337	5-13-3967
C-I	16	4730-01-241-3444	81337	5-13-3753
C-1	17	4820-00-902-2892	79227	B-60000 3/4
C-1	18	5320-00-957-5819	96906	MS20604B6W4
C-1	19	5320-01-192-2248	96906	MS24662-173
C-2	1	7330-01-248-9964	81337	5-13-3991
C-2	2	7330-01-249-1959	81337	5-13-3886
C-2	3	5320-00-417-5827	96906	MS24662/6
C-2	4	9905-01-248-8730	81337	5-13-3773
C-2	5	7360-01-250-3649	81337	5-13-3875
C-2	6	7360-01-250-3652	81337	5-13-3868
C-3	1	7105-01-250-0086	81337	5-13-3751
C-3	2		81337	5-13-3739
C-3	3	5310-00-903-5966	96906	MS51971-1
C-3	4	5310-00-527-3634	96906	MS35335-61
C-3	5	7360-01-250-3650	81337	5-13-3738
C-4	1	7310-01-245-6937	21669	SOOLCD-G
C-4	2	7320-01-255-8174	21669	6322-G
C-4	3	7320-01-213-6160	21669	14200
C-4	4	5330-01-255-2588	21669	12101
C-4	5	5305-00-497-7401	96906	MS51861-25C
C-4	6	5340-01-249-6786	21669	60028
C-4	7	7320-01-245-9048	21669	46002
C-4	8	7330-01-250-7730	21669	64003
C-5	1	7330-00238-2411	81349	MIL-F-10870
C-5	2	7330-00-243-3253	81349	2-9-112-4
C-5	3	7330-00-243-3253	81349	2-9-112-4-2
C-5	4	5330-00-032-2721	81337	2-9-112-4-6
C-5	5		81337	2-9-112-4-1
C-5	6		81337	2-9-110-2
C-5	7		81337	2-9-110-3
C-5	8	7690-01-223-2521	81337	2-9-110-3-5

CROSS-REFERENCE INDEXES

FIGURE AND ITEM NUMBER INDEX

FIG.	ITEM	STOCK NUMBER	FSCM	PART NUMBER
C-6	1	7330-01-236-3155	81390	1-W
C-6	2	530500-9228	96906	MS51957-62
C-6	3	7360-01-248-8733	83190	I SUPPORT PLATE
C-6	4	7330-01-234-2204	83190	K004
C-7	1	41 1 0-0144-2487	81337	5-13-2544G1
C-7	2		81337	5-13-2544P8
C-7	3	5305-00-497-7406	96906	MS51862-6C
C-7	4		81349	M24243/1-602
C-7	5	4010--228-9943	19203	8850124
C-7	6	4110-0045-1800	81337	5-13-2544P14
C-7	7	4730-01 -043525	55732	N401
C-7	8	4720-0104468215	81337	5-13-2544P19
C-7	9	5320-01-197-1605	81349	M24243/1-A616
C-7	10	5340-351-4099	98003	H4734SSW2G
C-7	11		81349	M24243/1 -06
C-7	12	4110-0145-5679	81337	5-13-2545G1
C-8	1	4110-01045 5679	81337	5-13-2545G1
C-8	2		81337	5-13-2545P14
C-8	3		81337	5-13-2545P15
C-8	4	5305-0-497-7401	96906	MS51861-25C
C-9	1	7360--082-2153	81349	M14601-1
C-10	1	7310-01-113-9172	81349	MIL-8-40098
C-11	1	7310-01-391-3065	81337	5-13-5625
C-1l	2		81337	5-13-5626-1
C-11	3		81337	5-13-5627-1
BULK	1	5330-01-391-2800	74951	V-1234-25

APPENDIX D
COMPONENTS OF END ITEM AND
BASIC ISSUE ITEMS LIST

SECTION I. INTRODUCTION

D-1. SCOPE . This appendix lists Components of End Item (COEI) and Basic Issue Items (BII) for the KCLFF and KCLFF-E to help you inventory items required for safe and efficient operation.

D-2. GENERAL The Components of End Item List (COEL) is divided into the following sections:

a. Section II. Components of Find Item. These items, when assembled, comprise the KCLFF and must accompany it whenever it is transferred to turned in. The illustrations in figure D-I will help you identify these items.

b. Section III. Basic Issue Items. These are the minimum essential items required to place the KCLFF or KCLFF-E m operation, to operate it, and to perform emergency repairs. Although shipped separately packed they must accompany the KCLFF or KCLFF-E during operation and whenever it is transferred between accountable officers. The illustration m Figure D-2 will assist you with hard-to-identify items. This manual is your authority to requisition replacement items based on the Modified Table of Organization and Equipment (MTOE).

D-3. EXPLANATION OF COLUMNS. The following provides an explanation of columns found in the tabular listings:

a. Column (1) - Illustration. Indicates the Illustration number of KCLFF or KCLFF-E components and accessories.

b. Column (2) - National Stock Number (NSN) Indicates the NSN assigned to the item and will be used for requisition purposes.

c. Column (3) - Description. CAGEC and Part Number. Indicates the noun name and, if required, a minimum description to identify and locate the item. The last line for each item indicates the CAGEC (in parentheses) followed by the part number. If the item you need is not the same for different models of the equipment, a usable on code will appear on the right side of the description column on the same line as the part number. These codes are identified below:

Code	Used On
BLANK	BOTH
EDE	MIL-K44156 Type I (KCLFF)
FHE	MILK-44156 Type II (KCLFF-E)

d. Column (4) - Unit of Measure (U/M). Indicates the measure used in performing the actual operational/maintenance function. This measure is expressed by a two-character alphabetical abbreviation (i.e., ea, in, pr).

e. Column (5) - Quantity Required (Qty Rqd). Indicates the quantity of the item authorized to be used with/on the equipment.

Section II. COMPONENTS OF END ITEM

(1) Illus Number	(2) National Stock Number	(3) Description CAGEC and Part Number	Usable On Code	(4) U/M	(5) Qty rqr
1	8030-00-087-8630	ANTISEIZE COMPOUND (81349), MIIL-T-83483		EA	1
2	4610-00-268-9890	BAG, WATER, STERILIZING (81349), MIU B-273		EA	1
3	7330-00-078-5706	BOARD, FOOD CHOPPING (58536), A-A-391		EA	1
4	7920-00-291-5815	BRUSH, WIRE, SCRATCH (81348), HB178		EA	1

Section IL COMPONENTS OF END ITEM

(1) Illus Number	(2) National Stock Number	(3) Description CAGEC and Part Number	Usable On Code	(4) U/M	(5) Qty rqr
5	7310-00-113-9172	BURNER NIJ GASOLINE, M2A (81349), B40ILB4098		EA	2
6	8110-01-390-7839	CAN, SLIP COVER TOP (2A394), Sl0S	EDE	EA	1
7	7240-01-337-5269	CAN, F'EL, MILITARY (81349), MIL-C-53109		EA	2
8	7240-00-089-3827	CAN, WATER PLASTIC (81349), ILC-43613		EA	8
9	7310-01411-2271	CHEST, TOOL GASOLINE (59562), G7220		EA	1
10	5120-00-379-2490	CLEANEI BURNER SLOT (81349), L-C-1429		EA	1
11	7330-01-24&9964	COOKING POT CRADLE ASSEMBLY (81337), 5-13-3991		EA	1
12	7330-00-250-6300	COVER, COOKING POT (81349), MIL-P-1735		EA	2
13	7310-01-245-6937	DISPENSER, LIQUID, INSULATED (21669,) ID-43916		EA	4
14	7330-238-2411	FOOD CONTAINER, INSULATED (21669), MIL-F-10870	EDE FHE	EA	4 16

Section II COMPONENTS OF END r1r11

(1) Illus Number	(2) National Stock Number	(3) Description CAGEC and Part Number	Usable On Code	(4) U/M	(5) Qty rqr
15	7310-00-999-2552	GENERATOR, PREHEATER (81337), 5-11-1232		EA	4
16	7360-01-248-6041	HEATER TANK ASSEMBLY (81337), 5-133721		EA	1
17	4720-00-379-2518	HOSE ASS OIBL;Y, NONMETALLIC (81337), MIL-P-1836 PTN0202		EA	1
18	7420-00-729-5334	HOSE ASSEMBLY, NONMETALLIC (81348), L-H-520		EA	1
19	7340-00-197-1271	KNIFE, BONING (81348), GGCGC-746		EA	1
20	7340-00406-6531	KNIFE, SLICING (81348), GGG-C-746		EA	1
21	6260-00-837-0996	LANTERN, GASOLINE (58536), A-A-52078		EA	1
22	7330-01-234-2164	LIFTER, TRAY-PACK (81337), 5-13-3961		EA	1
23	7330-01-224-0914	LIFTER, TRAY-PACK, SERVIN (81337), 5-13-3859		EA	1
23.1	7310-01-385-6263	LFITER, SERVING, NO 10 CAN (81337), 5-13.4265		EA	1
24	7330-00-205-3096	MEASURE, LIUID (58536), A-A-1751		EA	1
25	7330-01-245-0201	OPENER, CAN, HAND 81337, MIL-4368		EA	2
26	7330-01-236-3155	OPENER, C AN, MOUNTED (83190), 1-W		EA	1

Section II. COMPONENTS OF END ITEM

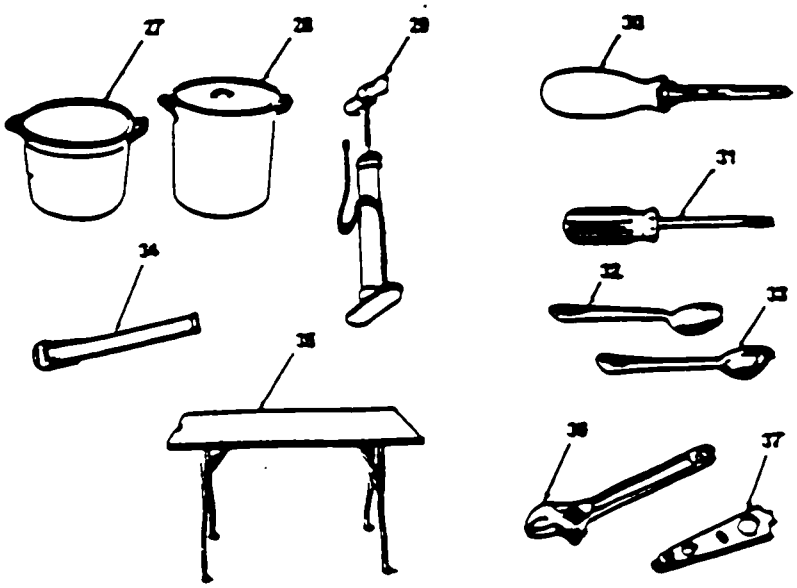

032

(1) Illus Number	(2) National Stock Number	(3) Description CAGEC and Part Number	Usable On Code	(4) U/M	(5) Qty rqr
27	7330-00-292-2306	POT, COOKING, 10 GAL W/O COVER (80244), MIL-P-1735 SZ1		EA	1
28	7330-00-292-2307	POT, COOKING 15 GAL W/COVER (80244), MIL-P-1735 SZ2		EA	1
29	4320-852-9036	PUMP, INFLATING, MANUAL (80244), XX-P-1735 STD		EA	1
30	5120-00-234-8913	SCREWDRIVER, CROSS TIP (75347), DB122		EA	1
31	5120-00-222-8852	SCREWDRIVER, FLAT TIP (81348), GGG-S-1221		EA	1
32	7340-00-223-7800	SPOON, FOOD SERVICE BASTING (81349), MIL-U-10815 TY2		EA	4
33	7340-00-205-1421	SPOON, FOOD SERVICE SLOTTED (81348), A-A-1082		EA	4
34	7240-00-174-6154	SPOUT, CAN, GASOLINE (81349), MIL-S-1285		EA	1
35	7105-01-250-0086	TABLE ASSEMBLY (81337), 5-13-3751		EA	1
36	5120-00-240-5328	WRENCH, ADJUSTABLE (58536), A-A-2344		EA	1
37	5120-00-303-7737	WRENCH, COMBINATION (81337), 2-9-108		EA	1

Section II. COMPONENTS OF END ITEM

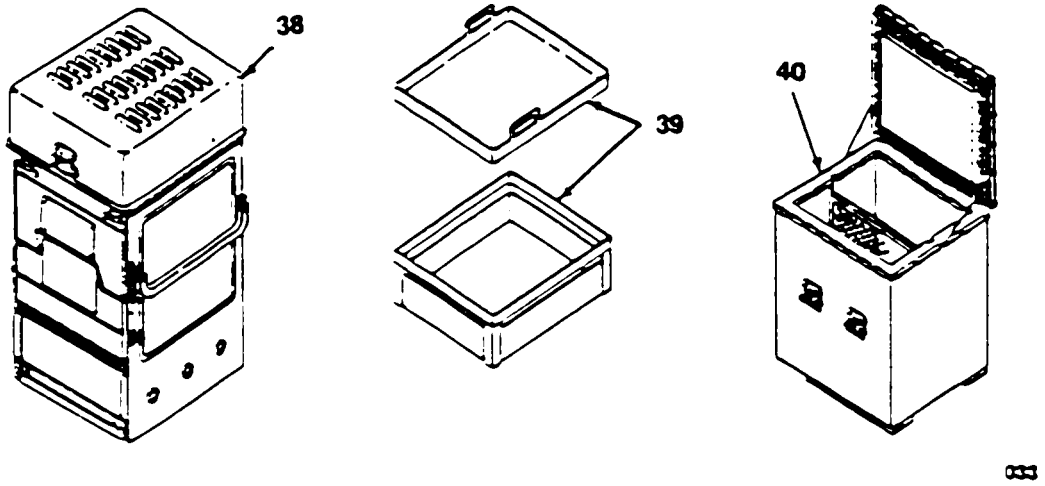

(1) ILLUS NUMBER	(2) NATIONAL STOCK NUMBER	(3) DESCRIPTION, CAGEC and Part Number	Usable On Code	(4) U/M	(5) QTY Rqd
38	7360-00-082-2153	RANGE OUTFIT, FIELD, GASOLINE, (81349), M14601-1	FHE	EA	1
39	7310-01-391-3065	GRIDDLE ASSEMBLY (81337), 5-13-5625	FHE	EA	
40	4110-01-044-2487	CHEST, ICE STORAGE (81337), 5-13-2544G1	FHE	EA	1

Section II. COMPONENTS OF END ITEM

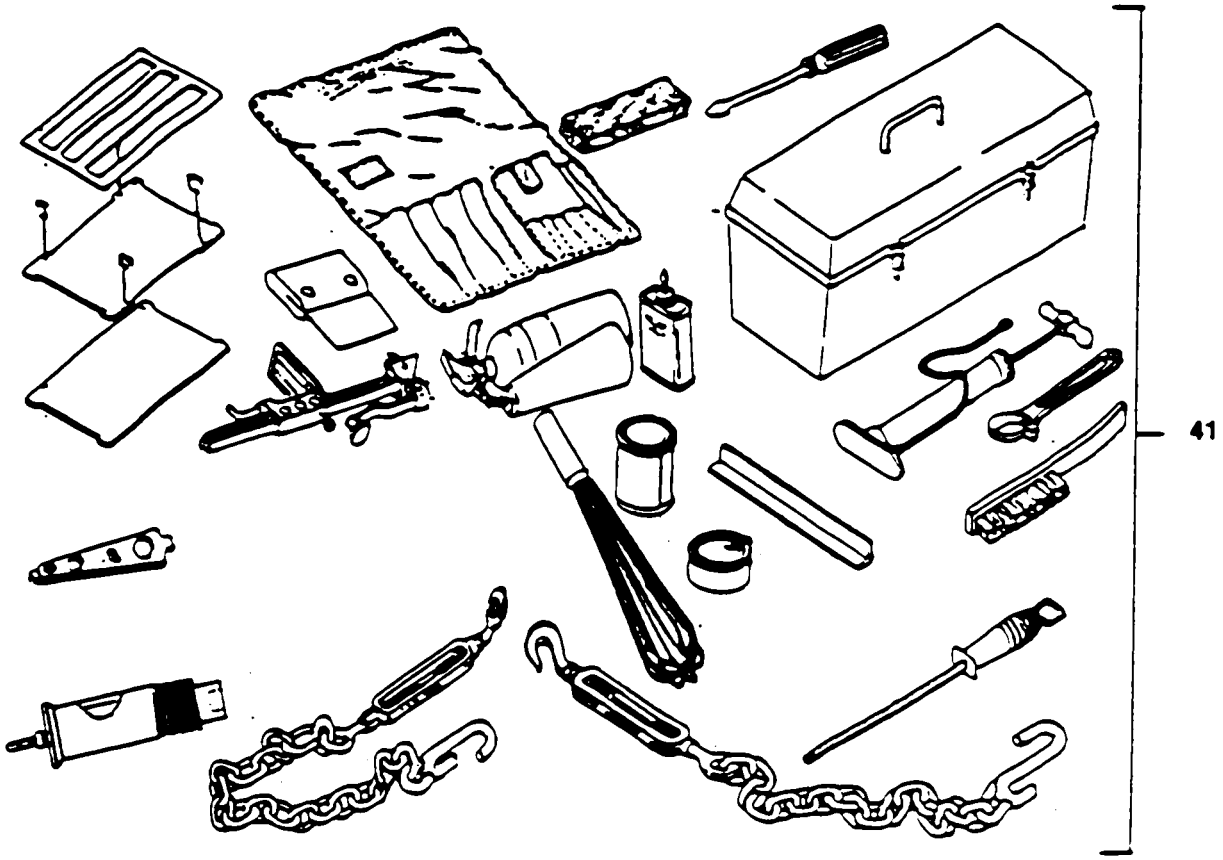

(1) ILLUS NUMBER	(2) NATIONAL STOCK NUMBER	(3) DESCRIPTION, CAGEC and Part Number	Usable On Code	(4) U/M	(5) QTY Rqd
41	7360-00-187.4757	ACCESSORY OUTFIT, GASOLINE FIELD RANGE, WITH BAKING RACKS (81349), M14601-2	FHE	EA	1

Section III. BASIC ISSUE ITEMS

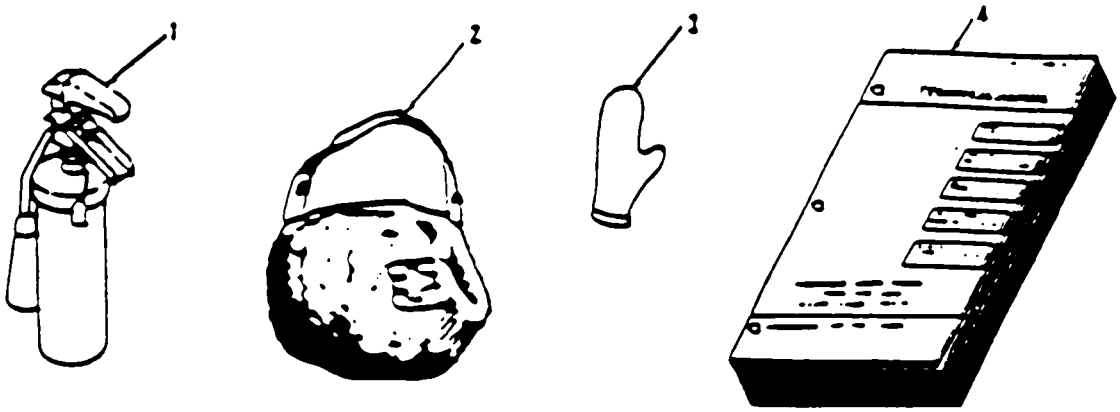

(1) ILLUS NUMBER	(2) NATIONAL STOCK NUMBER	(3) DESCRIPTION, CAGEC and Part Number	Usable On Code	(4) U/M	(5) QTY Rqd
1	4210-00-270-4512	EXTINGUISHER FIRE (81348), 0-E-910		EA	1
2	6645919-660	FRST AID KIT (64616), IRRA-6882		EA	1
3	8415-01-092-3910	GLOVES, HEAT PROTECTIVE (81349), MILG-44013		PR	1
4		TECHNICAL MANUAL TM 10-7360-209-13&P		EA	1
		TECHNICAL MANUAL TM 10-7360-204-13&P	FHE	EA	1

APPENDIX E

ADDITIONAL AUTHORIZATION LIST

Section I. INTRODUCTION

E-1. SCOPE. This appendix lists additional items authorized for the support of the KCLFF.

E-2. GENERAL. This list identifies items that do not have to accompany the KCLFF and that do not have to be turned in with it.

E-3. EXPLANATION OF LISTING. National Stock Numbers, descriptions, and quantities are provided to help you identify and request the additional items you require to support this equipment. The items are listed in alphabetical sequence by item name under the type document (i.e., CTA, MTOE, TDA or JTA) which authorizes the item(s) to you. If the item you require differs between serial numbers of the same model, effective serial numbers are shown in the last line of the description. If item required differs for different models of this equipment, the model is shown under the "Usable on" heading in the description column. These codes are identified as:

Code	Usable On
EDE	KCLFF-85

(1) NATIONAL STOCK NUMBER	(2) DESCRIPTION PART NUMBER & CAGEC	USABLE ON CODE	(3) U/M	(4) QTY AUTH

APPENDIX F

EXPENDABLE/DURABLE SUPPLIERS AND MATERIALS LIST

Section I. INTRODUCTION

F-1. SCOPE. This appendix lists expendable supplies and materials you will need to operate and maintain the KCLFF and KCLFF-E. This listing is for informational purposes only and is not authority to requisition the listed items. These items are authorized to you by CTA 50-970, Expendable/Durable Items (except Medical Class 5, Repair Parts, and Heraldic Items), or CTA 8100, Army Medical Department Expendable/Durable Items.

F-2. EXPLANATION OF COLUMNS.

a. Column 1 - Item Number. This number is assigned to entry in the listing and is referenced in the narrative instructions to identify the material (e.g. use cleaning compound, item 5, appendix E).

b. Column 2 - Level. This column identifies the lowest level of maintenance that requires the listed item.

C - Operator/Crew
O - Organizational

c. Column 3 - National Stock Number. This is the NSN assigned to the item; use it to request or requisition the item.

d. Column 4 Description. Indicates the Federal item name and, if required, a description to identify the item. The last line for each item indicates the Commercial and Government Entity Code (CAGEC) in parentheses, followed by the part number.

e. Column 5 Unit of Measure (U/M). Indicates the measure used in performing the actual maintenance function., This measure is expressed by a two-character alphabetical abbreviation (e.g, ea in, pr). If the unit of measure differs from the unit of issue, requisition the lowest unit of issue that will satisfy your requirements.

Section II. EXPENDABLE SUPPLIES AND MATERIALS LIST

(1) ITEM NUMBER	(2) LEVEL	(3) NATIONAL STOCK NUMBER	(4) DESCRIPTION	(5) U/M
1	O	8030-00-251-5048	CORROSION PREVENTIVE COMPOUND (81349), MIL-C-10382	PT
2	C	8135-00-226-3124	BARRIER MATERIAL (81349), MI-B-121	RO
3	C	6850-00-664-5685	DRY CLEAN SOLVENT (58536), A-A-711 TY1	GL
4	C	9150-00-273-2389	LUBRICATING OIL, GENERAL PURPOSE (81348), W-L-800	OZ
5	O		CEMENT VINYL (74951), C33650	OZ
6	C	8030-00-087-8630	ANTISEIZE THREAD COMPOUND (81349), MIT-83483	OZ
7	O		SEALANT POLYURETHANE (94836), 676	OZ
8	C	2930-00-281-4731	DISHWASHING COMPOUND, HAND (58536), A-A5	OZ

APPENDIX G

ILLUSTRATED LIST OF MANUFACTURED ITEMS

G-1. INTRODUCTION.

This appendix includes complete instructions for making items authorized to be manufactured or fabricated at the unit maintenance level and direct support maintenance level.

A part number index in alphanumeric order is provided for cross-referencing the part number or the item to be manufactured to the figure which covers fabrication criteria.

All bulk material needed for manufacture of an item are listed by part number or specification number in a tabular list on the illustration.

G-2. MANUFACTURED ITEMS PART NUMBER INDEL

PART NUMBER OF MANUFACTURED ITEM	APPLICABLE FIGURE
GASKET	G-1

G-3. GENERAL INSTRUCTIONS.

The manufacture of gasket consists of following:

1. REPLACING TOP/BOTTOM ICE CHEST GASKET. Lay out a piece of new gasket materiel and cut to the length and pattern shown in Figure G1. Use the gasket retainer to align and drill holes in gasket.

2. REPLACING ICE CHEST SIDE GASKET. Lay out a piece of new gasket materiel and cut to the length and pattern shown in Figure G1. Use the gasket retainer to align and drill holes in gasket.

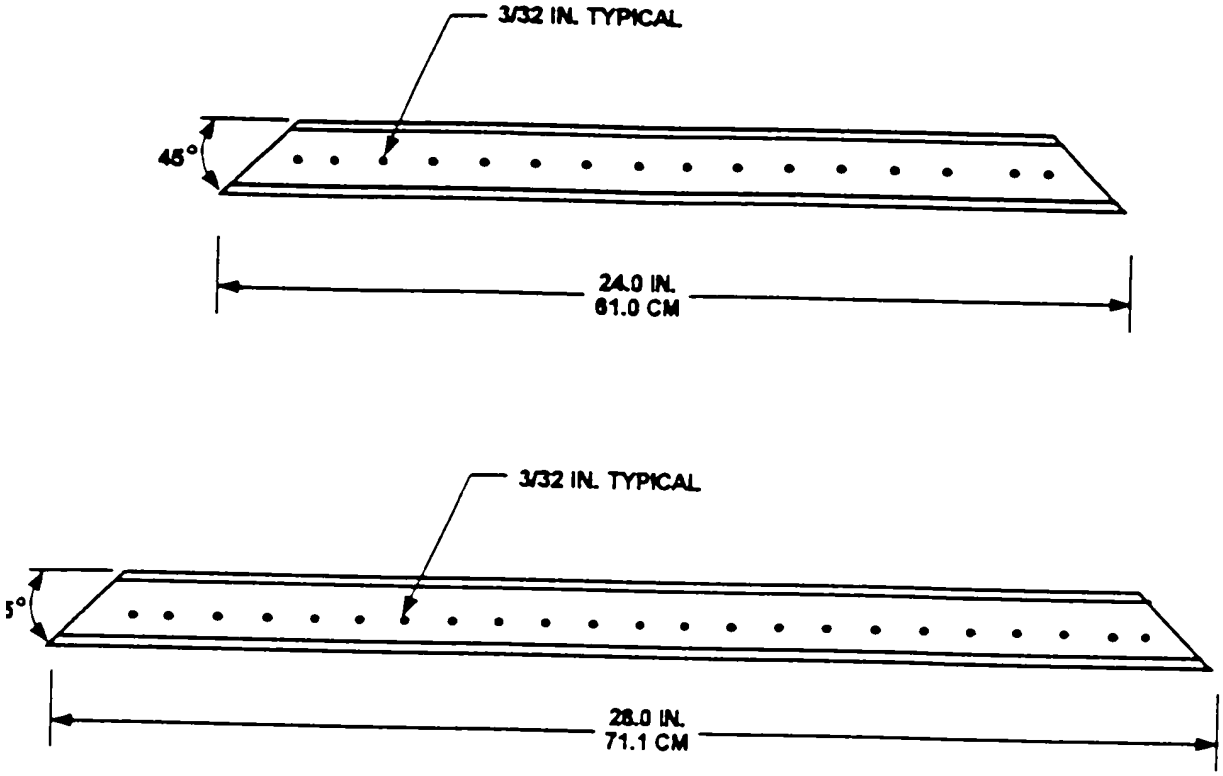

INSTRUCTIONS

1. CUT GASKET MATERIAL P/N V-1234-25 TO PROPER LENGTH.
2. TRIM BOTH ENDS AT A 45 DEGREE ANGLE.
3. USING RETAINER AS A GUIDE DRILL 3/32-IN. HOLES IN GASKET.

Figure G-1. Manufacturing the Ice Chest Gasket

PARTS LIST

FIND NO.	PART NO.	QUANTITY REQUIRED	DESCRIPTION	U/M
1	V-1234-25	AR	RUBBER GASKET, 74951	IN.

INDEX

INDEX (Cont)

INDEX (Cont)

☆U.S. GOVERNMENT PRINTINQ OFFICE: 1996 7TS-025/40180

By Order of the Secretary of the Army:

JOHN A. WICKHAM, JR.
General, United States Army
Chief of Staff

Official:

R. L. DILWORTH
Brigadier General, United States Army
The Adjutant General

DISTRIBUTION:
To be distributed in accordance with DA Form 12-25A, Operator, organizational, and Direct Support Maintenance requirements for Kitchen, Field, Mobile, Trailer Mounted (MKT-75)

*U.S. GOVERNMENT PRINTING OFFICE 1995-388-421/02414

These are the instructions for sending an electronic 2028

The following format must be used if submitting an electronic 2028. The subject line must be exactly the same and all fields must be included; however, only the following fields are mandatory: 1, 3, 4, 5, 6, 7, 8, 9, 10, 13, 15, 16, 17, and 27.

From: "Whomever" whomever@avma27.army.mil

To: amssbriml@natick.army.mil

Subject: DA Form 2028

1. ***From:*** Joe Smith
2. *Unit* home
3. ***Address:*** 4300 Park
4. ***City:*** Hometown
5. ***St:*** MO
6. ***Zip:*** 77777
7. ***Date Sent:*** 19-OCT-93
8. ***Pub no:*** 55-2840-229-23
9. ***Pub Title:*** TM
10. ***Publication Date:*** 04-JUL-85
11. *Change Number:* 7
12. *Submitter Rank:* MSG
13. ***Submitter FName:*** Joe
14. *Submitter MName:* T
15. ***Submitter LName:*** Smith
16. ***Submitter Phone:*** 123-123-1234
17. ***Problem:*** 1
18. *Page:* 2
19. *Paragraph:* 3
20. *Line:* 4
21. *NSN:* 5
22. *Reference:* 6
23. *Figure:* 7
24. *Table:* 8
25. *Item:* 9
26. *Total:* 123
27. ***Text:***

This is the text for the problem below line 27.

RECOMMENDED CHANGES TO PUBLICATIONS AND BLANK FORMS For use of this form, see AR 25-30; the proponent agency is ODISC4.	Use Part II *(reverse)* for Repair Parts and Special Tool Lists (RPSTL) and Supply Catalogs/Supply Manuals (SC/SM).	**DATE** *21 October 2003*

TO: *(Forward to proponent of publication or form) (Include ZIP Code)* COMMANDER U.S. ARMY TANK-AUTOMOTIVE AND ARMAMENT COMMAND ATTN: AMSTA-LC-CECT 15 KANSAS STREET NATICK, MA 01760-5052	**FROM:** *(Activity and location) (Include ZIP Code)* *PFC Jane Doe* *CO A 3rd Engineer BR* *Ft. Leonardwood, MO 63108*

PART I – ALL PUBLICATIONS (EXCEPT RPSTL AND SC/SM) AND BLANK FORMS

PUBLICATION/FORM NUMBER	DATE	TITLE
TM 10-1670-296-23&P	30 October 2002	Unit Manual for Ancillary Equipment for Low Velocity Air Drop Systems

ITEM NO.	PAGE NO.	PARA-GRAPH	LINE NO. *	FIGURE NO.	TABLE NO.	RECOMMENDED CHANGES AND REASON *(Provide exact wording of recommended changes, if possible).*
	0036 00-2				*1*	*In table 1, Sewing Machine Code Symbols, the second sewing machine code symbol should be MD ZZ not MD 22.* *Change the manual to show Sewing Machine, Industrial: Zig-Zag; 308 stitch; medium-duty; NSN 3530-01-181-1421 as a MD ZZ code symbol.*

**Reference to line numbers within the paragraph or subparagraph.*

TYPED NAME, GRADE OR TITLE	TELEPHONE EXCHANGE/AUTOVON, PLUS EXTENSION	SIGNATURE
Jane Doe, PFC	508-233-4141	Jane Doe *Jane Doe*

TO: (*Forward direct to addressee listed in publication*)	FROM: (*Activity and location*) (*Include ZIP Code*)	DATE
COMMANDER U.S. ARMY TANK-AUTOMOTIVE AND ARMAMENT COMMAND ATTN: AMSTA-LC-CECT 15 KANSAS STREET NATICK, MA 01760-5052	*PFC Jane Doe* *CO A 3rd Engineer BR* *Ft. Leonardwood, MO 63108*	*21 October 2003*

PART II – REPAIR PARTS AND SPECIAL TOOL LISTS AND SUPPLY CATALOGS/SUPPLY MANUALS

PUBLICATION NUMBER	DATE	TITLE
TM 10-1670-296-23&P	30 October 2002	Unit Manual for Ancillary Equipment for Low Velocity Air Drop Systems

PAGE NO.	COLM NO.	LINE NO.	NATIONAL STOCK NUMBER	REFERENCE NO.	FIGURE NO.	ITEM NO.	TOTAL NO. OF MAJOR ITEMS SUPPORTED	RECOMMENDED ACTION
0066 00-1					*4*			*Callout 16 in figure 4 is pointed to a D-Ring. In the Repair Parts List key for figure 4, item 16 is called a Snap Hook. Please correct one or the other.*

PART III – REMARKS (*Any general remarks or recommendations, or suggestions for improvement of publications and blank forms. Additional blank sheets may be used if more space is needed.*)

TYPED NAME, GRADE OR TITLE	TELEPHONE EXCHANGE/AUTOVON, PLUS EXTENSION	SIGNATURE

RECOMMENDED CHANGES TO PUBLICATIONS AND BLANK FORMS For use of this form, see AR 25-30; the proponent agency is ODISC4.	Use Part II *(reverse)* for Repair Parts and Special Tool Lists (RPSTL) and Supply Catalogs/Supply Manuals (SC/SM).	DATE
TO: *(Forward to proponent of publication or form) (Include ZIP Code)* COMMANDER U.S. ARMYTANK-AUTOMOTIVE AND ARMAMENT COMMAND ATTN: AMSTA-LC-CECT 15 KANSAS STREET NATICK, MA 01760-5052	**FROM:** *(Activity and location) (Include ZIP Code)*	

PART I – ALL PUBLICATIONS (EXCEPT RPSTL AND SC/SM) AND BLANK FORMS

PUBLICATION/FORM NUMBER	DATE	TITLE
TM 10-7360-209-13&P	10 April 1987	Operator, Organizational, and Direct Support Maintenance Manual including Repair Parts and Special Tools List for Kitchen, Company Level Field Feeding and Kitchen, Company Level Field Feeding-Enhanced

ITEM NO.	PAGE NO.	PARA-GRAPH	LINE NO. *	FIGURE NO.	TABLE NO.	RECOMMENDED CHANGES AND REASON *(Provide exact wording of recommended changes, if possible).*

**Reference to line numbers within the paragraph or subparagraph.*

TYPED NAME, GRADE OR TITLE	TELEPHONE EXCHANGE/AUTOVON, PLUS EXTENSION	SIGNATURE

TO: (*Forward direct to addressee listed in publication*) COMMANDER U.S. ARMYTANK-AUTOMOTIVE AND ARMAMENT COMMAND ATTN: AMSTA-LC-CECT 15 KANSAS STREET NATICK, MA 01760-5052	**FROM:** (*Activity and location) (Include ZIP Code)*	**DATE**

PART II – REPAIR PARTS AND SPECIAL TOOL LISTS AND SUPPLY CATALOGS/SUPPLY MANUALS

PUBLICATION NUMBER	DATE	TITLE
TM 10-7360-209-13&P	10 April 1987	Operator, Organizational, and Direct Support Maintenance Manual including Repair Parts and Special Tools List for Kitchen, Company Level Field Feeding and Kitchen, Company Level Field Feeding-Enhanced

PAGE NO.	COLM NO.	LINE NO.	NATIONAL STOCK NUMBER	REFERENCE NO.	FIGURE NO.	ITEM NO.	TOTAL NO. OF MAJOR ITEMS SUPPORTED	RECOMMENDED ACTION

PART III – REMARKS (*Any general remarks or recommendations, or suggestions for improvement of publications and blank forms. Additional blank sheets may be used if more space is needed.)*

TYPED NAME, GRADE OR TITLE	TELEPHONE EXCHANGE/AUTOVON, PLUS EXTENSION	SIGNATURE

RECOMMENDED CHANGES TO PUBLICATIONS AND BLANK FORMS For use of this form, see AR 25-30; the proponent agency is ODISC4.	Use Part II *(reverse)* for Repair Parts and Special Tool Lists (RPSTL) and Supply Catalogs/Supply Manuals (SC/SM).	DATE
TO: *(Forward to proponent of publication or form) (Include ZIP Code)* COMMANDER U.S. ARMYTANK-AUTOMOTIVE AND ARMAMENT COMMAND ATTN: AMSTA-LC-CECT 15 KANSAS STREET NATICK, MA 01760-5052	**FROM:** *(Activity and location) (Include ZIP Code)*	

PART I – ALL PUBLICATIONS (EXCEPT RPSTL AND SC/SM) AND BLANK FORMS

PUBLICATION/FORM NUMBER	DATE	TITLE
TM 10-7360-209-13&P	10 April 1987	Operator, Organizational, and Direct Support Maintenance Manual including Repair Parts and Special Tools List for Kitchen, Company Level Field Feeding and Kitchen, Company Level Field Feeding-Enhanced

ITEM NO.	PAGE NO.	PARA-GRAPH	LINE NO. *	FIGURE NO.	TABLE NO.	RECOMMENDED CHANGES AND REASON *(Provide exact wording of recommended changes, if possible).*

**Reference to line numbers within the paragraph or subparagraph.*

TYPED NAME, GRADE OR TITLE	TELEPHONE EXCHANGE/AUTOVON, PLUS EXTENSION	SIGNATURE

TO: (*Forward direct to addressee listed in publication*) COMMANDER U.S. ARMYTANK-AUTOMOTIVE AND ARMAMENT COMMAND ATTN: AMSTA-LC-CECT 15 KANSAS STREET NATICK, MA 01760-5052	**FROM:** (*Activity and location) (Include ZIP Code)*	**DATE**

PART II – REPAIR PARTS AND SPECIAL TOOL LISTS AND SUPPLY CATALOGS/SUPPLY MANUALS

PUBLICATION NUMBER	DATE	TITLE
TM 10-7360-209-13&P	10 April 1987	Operator, Organizational, and Direct Support Maintenance Manual including Repair Parts and Special Tools List for Kitchen, Company Level Field Feeding and Kitchen, Company Level Field Feeding-Enhanced

PAGE NO.	COLM NO.	LINE NO.	NATIONAL STOCK NUMBER	REFERENCE NO.	FIGURE NO.	ITEM NO.	TOTAL NO. OF MAJOR ITEMS SUPPORTED	RECOMMENDED ACTION

PART III – REMARKS (*Any general remarks or recommendations, or suggestions for improvement of publications and blank forms. Additional blank sheets may be used if more space is needed.)*

TYPED NAME, GRADE OR TITLE	TELEPHONE EXCHANGE/AUTOVON, PLUS EXTENSION	SIGNATURE

RECOMMENDED CHANGES TO PUBLICATIONS AND BLANK FORMS For use of this form, see AR 25-30; the proponent agency is ODISC4.	Use Part II *(reverse)* for Repair Parts and Special Tool Lists (RPSTL) and Supply Catalogs/Supply Manuals (SC/SM).	DATE
TO: *(Forward to proponent of publication or form) (Include ZIP Code)* COMMANDER U.S. ARMYTANK-AUTOMOTIVE AND ARMAMENT COMMAND ATTN: AMSTA-LC-CECT 15 KANSAS STREET NATICK, MA 01760-5052	**FROM:** *(Activity and location) (Include ZIP Code)*	

PART I – ALL PUBLICATIONS (EXCEPT RPSTL AND SC/SM) AND BLANK FORMS

PUBLICATION/FORM NUMBER	DATE	TITLE
TM 10-7360-209-13&P	10 April 1987	Operator, Organizational, and Direct Support Maintenance Manual including Repair Parts and Special Tools List for Kitchen, Company Level Field Feeding and Kitchen, Company Level Field Feeding-Enhanced

ITEM NO.	PAGE NO.	PARA-GRAPH	LINE NO. *	FIGURE NO.	TABLE NO.	RECOMMENDED CHANGES AND REASON *(Provide exact wording of recommended changes, if possible).*

**Reference to line numbers within the paragraph or subparagraph.*

TYPED NAME, GRADE OR TITLE	TELEPHONE EXCHANGE/AUTOVON, PLUS EXTENSION	SIGNATURE

TO: (*Forward direct to addressee listed in publication*) COMMANDER U.S. ARMYTANK-AUTOMOTIVE AND ARMAMENT COMMAND ATTN: AMSTA-LC-CECT 15 KANSAS STREET NATICK, MA 01760-5052	**FROM:** (*Activity and location) (Include ZIP Code)*	**DATE**

PART II – REPAIR PARTS AND SPECIAL TOOL LISTS AND SUPPLY CATALOGS/SUPPLY MANUALS

PUBLICATION NUMBER	DATE	TITLE
TM 10-7360-209-13&P	10 April 1987	Operator, Organizational, and Direct Support Maintenance Manual including Repair Parts and Special Tools List for Kitchen, Company Level Field Feeding and Kitchen, Company Level Field Feeding-Enhanced

PAGE NO.	COLM NO.	LINE NO.	NATIONAL STOCK NUMBER	REFERENCE NO.	FIGURE NO.	ITEM NO.	TOTAL NO. OF MAJOR ITEMS SUPPORTED	RECOMMENDED ACTION

PART III – REMARKS (*Any general remarks or recommendations, or suggestions for improvement of publications and blank forms. Additional blank sheets may be used if more space is needed.)*

TYPED NAME, GRADE OR TITLE	TELEPHONE EXCHANGE/AUTOVON, PLUS EXTENSION	SIGNATURE

The Metric System and Equivalents

Linear Measure

1 centimeter = 10 millimeters = .39 inch
1 decimeter = 10 centimeters = 3.94 inches
1 meter = 10 decimeters = 39.37 inches
1 dekameter = 10 meters = 3 2.8 feet
1 hectometer = 10 dekameters = 328.08 feet
1 kilometer = 10 hectometers = 3,280.8 feet

Liquid Measure

1 centiliter = 10 milliliters = .34 fl. ounce
1 deciliter = 10 centiliters = 3.38 fl. ounces
1 liter = 10 deciliters = 33.81 fl. ounces
1 dekaliter = 10 liters = 2.64 gallons
1 hectoliter = 10 dekaliters = 26.42 gallons
1 kiloliter = 10 hectoliters = 264.18 gallons

Weights

1 centigram = 10 milligrams = .15 grain
1 decigrarn = 10 centigrams = 1.54 grains
1 gram = 10 decigrams = .035 ounce
1 dekagrarn = 10 grams = .35 ounce
1 hectogram = 10 dekagrams = 3.52 ounces
1 kilogram = 10 hectograms = 2.2 pounds
1 quintal = 100 kilograms = 220.46 pounds
1 metric ton = 10 quintals = 1.1 short tons

Square Measure

1 sq. centimeter = 100 sq. millimeters = .15 5 sq. inch
1 sq. decimeter =100 sq. centimeters = 15.5 sq. inches
1 sq. meter (centare) = 100 sq. decimeters = 10.76 sq. feet
1 sq. dekameter (are) = 100 sq. meters = 1,076.4 sq. feet
1 sq. hectometer (hectare) = 100 sq. dekameters = 2.47 acres
1 sq. kilometer = 100 sq. hectometers = .386 sq. mile

Cubic Measure

1 cu. centimeter = 1000 cu. millimeters = .06 cu. inch
1 cu. decimeter = 1000 cu. centimeters = 61.02 cu. inches
1 cu. meter = 1000 cu. decimeters = 35.31 feet

Approximate Conversion Factors

To change	*To*	*Multiply by*	*To change*	*To*	*Multiply by*
inches	centimeters	2.540	ounce-inches	newton-meters	.007062
feet	meters	.305	centimeters	inches	.394
yards	meters	.914	meters	feet	3.280
miles	kilometers	1.609	meters	yards	1.094
square inches	square centimeters	6.451	kilometers	miles	.621
square feet	square meters	.093	square centimeters	square inches	.155
square yards	square meters	.836	square meters	square feet	10.764
square miles	square kilometers	2.590	square meters	square yards	1.196
acres	square hectometers	.405	square kilometers	square miles	.386
cubic feet	cubic meters	.028	square hectometers	acres	2.471
cubic yards	cubic meters	.765	cubic meters	cubic feet	35.315
fluid ounces	milliliters	29.573	cubic meters	cubic yards	1.308
pints	Iiters	.473	milliliters	fluid ounces	.034
quarts	Iiters	.946	liters	pints	2.113
gallons	Iiters	3.785	liters	quarts	1.057
ounces	grams	28.349	liters	gallons	.264
pounds	kilograms	.454	grams	ounces	.035
short tons	metric tons	.907	kilograms	pounds	2.205
pound-feet	newton-meters	1.356	metric tons	short tons	1.102
pound-inches	newton-meters	.11296			

Temperature (Exact)

_F	Fahrenheit temperature	5/9 (after subtracting 32)	Celsius temperature	_C

PIN: 062105-000

This fine document...

Was brought to you by me:

Liberated Manuals -- free army and government manuals

Why do I do it? I am tired of sleazy CD-ROM sellers, who take publicly available information, slap “watermarks” and other junk on it, and sell it. Those masters of search engine manipulation make sure that their sites that sell free information, come up first in search engines. They did not create it... They did not even scan it... Why should they get your money? Why are not letting you give those free manuals to your friends?

I am setting this document FREE. This document was made by the US Government and is NOT protected by Copyright. Feel free to share, republish, sell and so on.

I am not asking you for donations, fees or handouts. If you can, please provide a link to liberatedmanuals.com, so that free manuals come up first in search engines:

<A HREF=http://www.liberatedmanuals.com/>Free Military and Government Manuals</A>

- Sincerely
  Igor Chudov
  http://igor.chudov.com/
- Chicago Machinery Movers