OPERATOR'S MANUAL

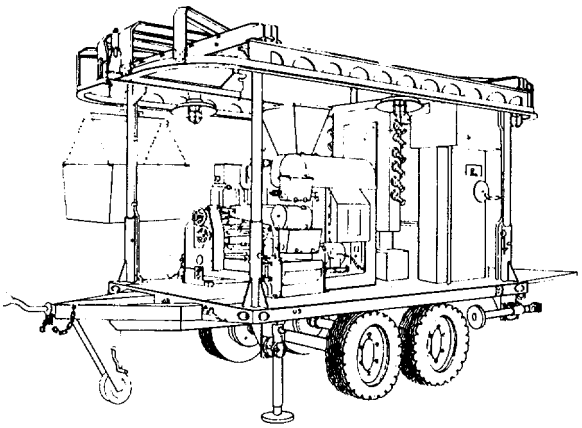

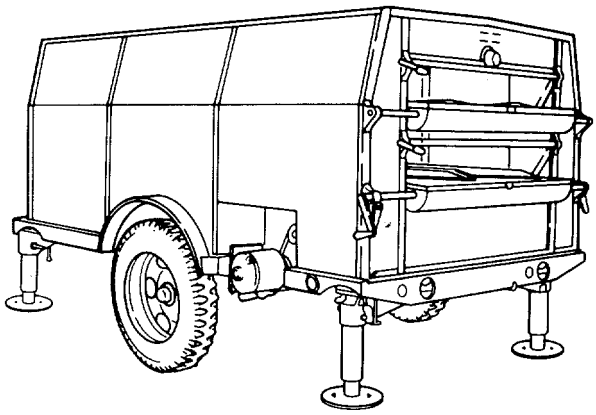

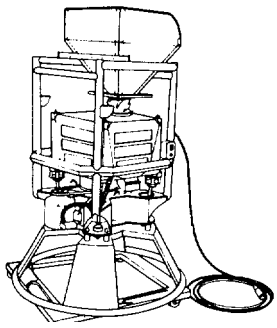

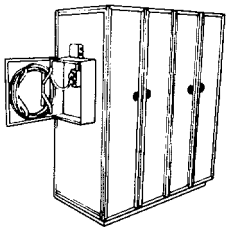

This copy is a reprint which includes current pages from Changes 1 and 2.

BAKERY PLANT, TRAILER MOUNTED, FIELD

MODELS M-1945, M-1945-50, M-1945-53, AND M-534-68

NSN 7360-00-221-2418 AND NSN 7360-01-010-0787

HEADQUARTERS, DEPARTMENT OF THE ARMY
16 JUNE 1986

CHANGE No. 2

HEADQUARTERS
DEPARTMENT OF THE ARMY
Washington, D.C., 5 June 1989

Operator's Manual
BAKERY PLANT, TRAILER MOUNTED, FIELD
Models M-1945, M-1945-50, M-1945-53 and M-534-68
NSN 7360-00-221-2418 and NSN 7360-01-010-0787

TM 10-7360-201-10, 16 June 1986, is changed as follows:

1. Remove and insert pages as indicated below. New or changed text material is indicated by a vertical bar in the margin. An illustration change is indicated by a miniature pointing hand.

Remove pages	Insert pages
1-13 and 1-14	1-13 and 1-14
B-5 and B-6	B-5 and B-6

2. Retain this sheet in front of manual for reference purposes.

By Order of the Secretary of the Army:

CARL E. VUONO
General, United States Army
Chief of Staff

Official:

WILLIAM J. MEEHAN, II
Brigadier General, United States Army
The Adjutant General

DISTRIBUTION:
To be distributed in accordance with DA Form 12-25A, Operator's Maintenance requirements for Bakery Plant, Trailer Mounted, M-1945.

CHANGE }
NO. 1

HEADQUARTERS
DEPARTMENT OF THE ARMY
WASHINGTON, D.C., 29 August 1988

Operator's Manual
BAKERY PLANT, TRAILER MOUNTED, FIELD
MODELS M-1945, M-1945-50, M1945-53, and M-534-68
NSN 7360-00-221-2418 and NSN 7360-01-010-0787
TM 10-7360-201-10, 16 June 1986, is changed as follows:

1. Remove and insert pages as indicated below. New or changed text material is indicated by a vertical bar in the margin. An illustration change is indicated by a miniature pointing hand.

Remove pages	Insert pages
B-3 and B-4	B-3 and B-4

2. Retain this sheet in front of manual for reference purposes.

By Order of the Secretary of the Army:

CARL E. VUONO
General, United States Army
Chief of Staff

Official:
R. L. DILWORTH
Brigadier General, United States Army
The Adjutant General

DISTRIBUTION:
To be distributed in accordance with DA Form 12-25A, Operator's Maintenance requirements for Bakery Plant, trailer Mounted, M-1945

WARNING

Fire Precautions

- Know where fire extinguishers are located and be sure they are in serviceable condition.
- Wipe any excess lubricant from around lubrication points.
- Watch all fuel lines for leaks. If leaks are present, be sure they are corrected before operating the equipment.
- Do not use gasoline to clean fuel tanks. Keep tanks clear of sparks or flames.
- Do not start generator engine heater if fuel is dripping from the overflow tube. Shut off fuel supply and have trouble corrected.
- Dry cleaning solvent, P-D-680 used to clean parts is potentially dangerous to personnel and property. Avoid repeated and prolonged skin contact. Do not use near open flame or excessive heat. Flash point of solvent is 100 degrees F to 138 degrees F (38 degrees C to 59 degrees C).

Explosion Precautions

- Keep doors covering pressure relief sheets open during oven operation.

* After stopping operation, turn all fuel control valves to OFF position. Close shutoff valves at fuel tanks.

- Do not allow sparks or flames near tops of batteries. Never short-circuit a battery's electrodes to determine battery charge.
- Before lighting oven burner, preventilate oven heating system by running the blower 2 or 3 minutes to clear out gas fumes.
- After oven burner is shut off, let the blower run several minutes after burner stops firing to clear out gas fumes.

Mechanical Precautions

- Observe precautions for use of the jog and start pushbuttons on the mixing machine.
- Do not run oven blower for long periods with oven cold; this overloads blower motor.
- Do not turn on molder during cleaning.

WARNING

Electrical Precautions

- Before making power connections, be sure that main switch is in. OFF position and generator is not operating.

- Do not have more than 30 kilowatts on the service lines. Failure to observe this precaution can cause overload and serious damage to the generator.

- Never touch brush contact surfaces or bearing surfaces with fingers or test prods.

- Handle cables with care. High voltage on cables can cause injury or death if an uninsulated spot is touched by an operator standing on a damp surface.

- Be sure to ground generator. Drive ground rod into earth near generator and connect generator to rod.

TECHNICAL MANUAL

NO. 10-7360-201-10

HEADQUARTERS
DEPARTMENT OF THE ARMY
WASHINGTON, D.C., 16 June 1986

Operator's Manual

BAKERY PLANT, TRAILER MOUNTED, FIELD
MODELS M-1945, M-1945-50, M-1945-53, AND M-534-68
NSN 7360-00-221-2418 AND NSN 7360-01-010-0787

REPORTING ERRORS AND RECOMMENDING IMPROVEMENTS

You can help improve this manual. If you find any mistake or if you know of a way to improve the procedures, please let us know. Mail your letter, DA Form 2028 (Recommended Changes to Publications and Blank Forms), or DA Form 2028-2 located in the back of this manual direct to: Commander,: U.S. Army Troop Support Command, ATTN: AMSTR-MCTS, 4300 Goodfellow Boulevard, St. Louis, MO 63120-1798. A reply will be furnished directly to you.

TABLE OF CONTENTS

---

*This manual supersedes TM 10-7360-201-10, 23 March 1961, including all changes.

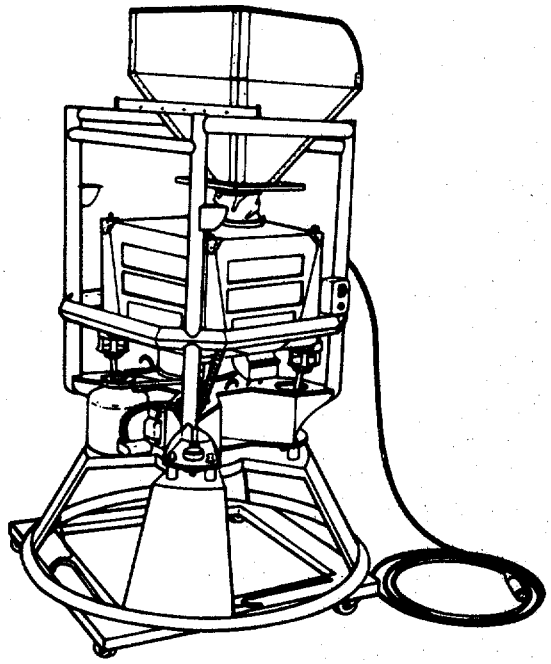

SIFTER

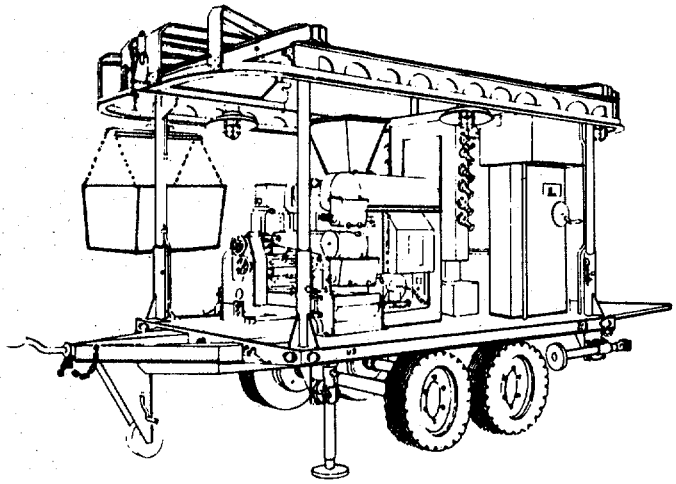

DOUGH MIXING AND MAKEUP OUTFIT TRAILER

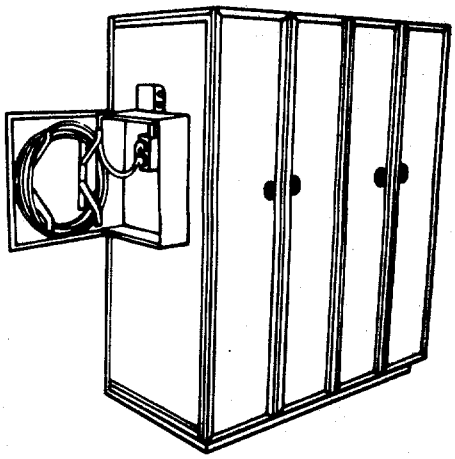

DOUGH PROOFING CABINET

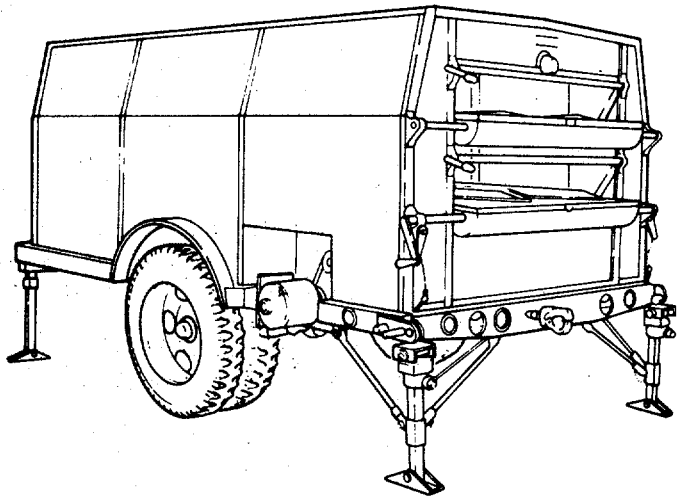

OVEN TRAILER

CHAPTER 1
INTRODUCTION

Section I. GENERAL INFORMATION

1-1. SCOPE

Type of Manual: Operator's Manual

Names and Model Numbers:

Bakery Plant, Trailer Mounted: Models:M-1945, M-1945-50, M-1945-53, and M-534-68 (NSN 7360-00-221 2418, NSN 7360-00-010-0787); consisting of:

Sifter Machine, Flour(one each); Electric; Agitator Type, 110 V ac, 60 Hz: Allis-Chalmers Model, Arm) Model SPE-20 (NSN 7320-00-221-2386). Armstrong Products Model 42386 (NSN 7320-00-043-5340).

Dough Mixing and Makeup Outfit, Trailer Mounted (one each): Century Machine Model, Army Model SPV 18 (NSN 7320-00-255-7769). Century Machine Model TR306, Army Model SPV-30 (NSN 7320-00-215-5256) Baker-Perkins Model TM-BP-68 (NSN 7320-00-880-8745). Cam Industries Model M534-1 (NSN 7320-00-334 5336).

Cabinet, Dough Proofing (three each); Electrically Heated; 220 V ac, 60 Hz: Drying Systems Model 1950 Army Model SPE-23 (NSN 7320-00-298-1380). Green and Sons Model 1954, Army Model SPE-30 (NSN 7320 00-215-5189). Washington Industrial Products, Inc. Model 8848 (NSN 7320-00-815-2682). Cam Industries Model C-PB30623 (NSN 7320-00-935-6632) or (NSN 7320-00-328-4760). (Any combination-of the models may be used.)

Bakery Oven, Trailer Mounted (three each); 208 V to 220 V ac, 60 Hz, 3-Phase: American Machinery Model Army Model SPV-26 (NSN 7310-00-255-8068). Century Machine Model MO-311, Army Model SPV-31 (NSN 7310-00-215-5260). Cam Industries Model 533-235 (NSN 7310-00-903-5402). (Any combination of the model. may be used.)

Auxiliary Equipment:

Two Generator Sets, PU-406/M, (NSN 6115-00-738-6342) are required to furnish electrical power for the Bakery Plant and must be requisitioned separately. Instructions for operation and maintenance of the generator sets, PU-406/M, are found in TM5-6115-365-15 and TM5-6115-465-12.

1-2. MAINTENANCE FORMS AND RECORDS

Department of the Army forms and procedures used for equipment maintenance will be those prescribed by DA PAM 738-750, The Army Maintenance Management System (TAM MS).

1-3. REPORTING EQUIPMENT IMPROVEMENT RECOMMENDATIONS(EIR)

If your bakery plant needs improvement, let us know. Send us an EIR. You, the user are the only one who can tell us what you don't like about your equipment. Let us know why you don't like the design or performance. Put it on an SF368 (Quality Deficiency Report). Mail it to: Commander, U.S. Army Troop Support Command, ATTN: AMSTR-QX, 4300 Goodfellow Boulevard, St. Louis, MO 63120-1798. We'll send you a reply.

1-14. ORIENTATION

TRAILERS. When the terms right, left, front, and rear are used in connection with the dough mixing and makeup outfit trailers and oven trailer, they indicate positions from the viewpoint of the operator sitting in the towing vehicle.

PROOFING CABINET. When the terms right, left, front, and rear are used in connection with the proofing cabinet, they indicate positions from the viewpoint of the operator facing the cabinet doors and having the control panel and pilot light on his left.

FLOUR SIFTER. When the terms right, left, front, and rear are used in connection with the flour sifter, they indicate directions with the manual starting switch considered the front, the discharge hopper door the rear, the motor side, the left, and the reject hopper door the right.

Section II. EQUIPMENT DESCRIPTION

1-5. EQUIPMENT CHARACTERISTICS, CAPABILITIES, AND FEATURES

Characteristics and Capabilities:

Provides 108-pan dough-proofing capacity and 55 lb (24.9 kg) per minute flour sifting for a 16,000-lb (7257.6 kg) baking capacity output per 24 hours.

Features:

- Mixing and Makeup Trailer
- Oven Trailer (three)
- Portable Proofing Cabinets (three)
- Portable Flour Sifter

1-6. LOCATION AND DESCRIPTION OF MAJOR COMPONENTS

MONORAIL (1). Provided for moving the dough.

MIXER BOWL (2). Mixes water and dough ingredients.

DIVIDER HOPPER (3). Feeds dough to divider, which cuts the dough into proper sized pieces for loaves.

DIVIDER SCALE (4). Checks weight of dough pieces from divider.

MOLDER SHEETING ROLL DUSTER (5). Dusts flour onto the dough to prevent it from sticking to the sheeting rolls.

DUSTER ADJUSTING STUD HANDLE (6). Regulates the amount of flour dusted on the molder sheeting rolls.

MOLDER MOTOR (7). Drives the molder assembly.

MOLDER CONVEYOR (8). Carries the dough piece from the rolls under the curling belt, around the conveyor pulley, back underneath the belt (between the belt and pressure board) and onto the discharge plate.

LEVELING-SUPPORT JACK (9). Levels the trailer.

MIXER MOTOR (10). Drives the mixer.

WORK PLATFORM (11). Accommodates operators.

MIXER MOTOR MAGNETIC STARTER (12). Provides power to the mixer start, stop, and jog pushbuttons. Protects against stalled mixer motor and overload conditions.

MIXER BOWL DIAL THERMOMETER (13). Measures temperature of mixer bowl ingredients.

WATER-TEMPERING TANK (14). Provides mixing water supply.

FIRE EXTINGUISHER (15). For extinguishing equipment fires.

1-6. LOCATION AND DESCRIPTION OF MAJOR COMPONENTS - Continued

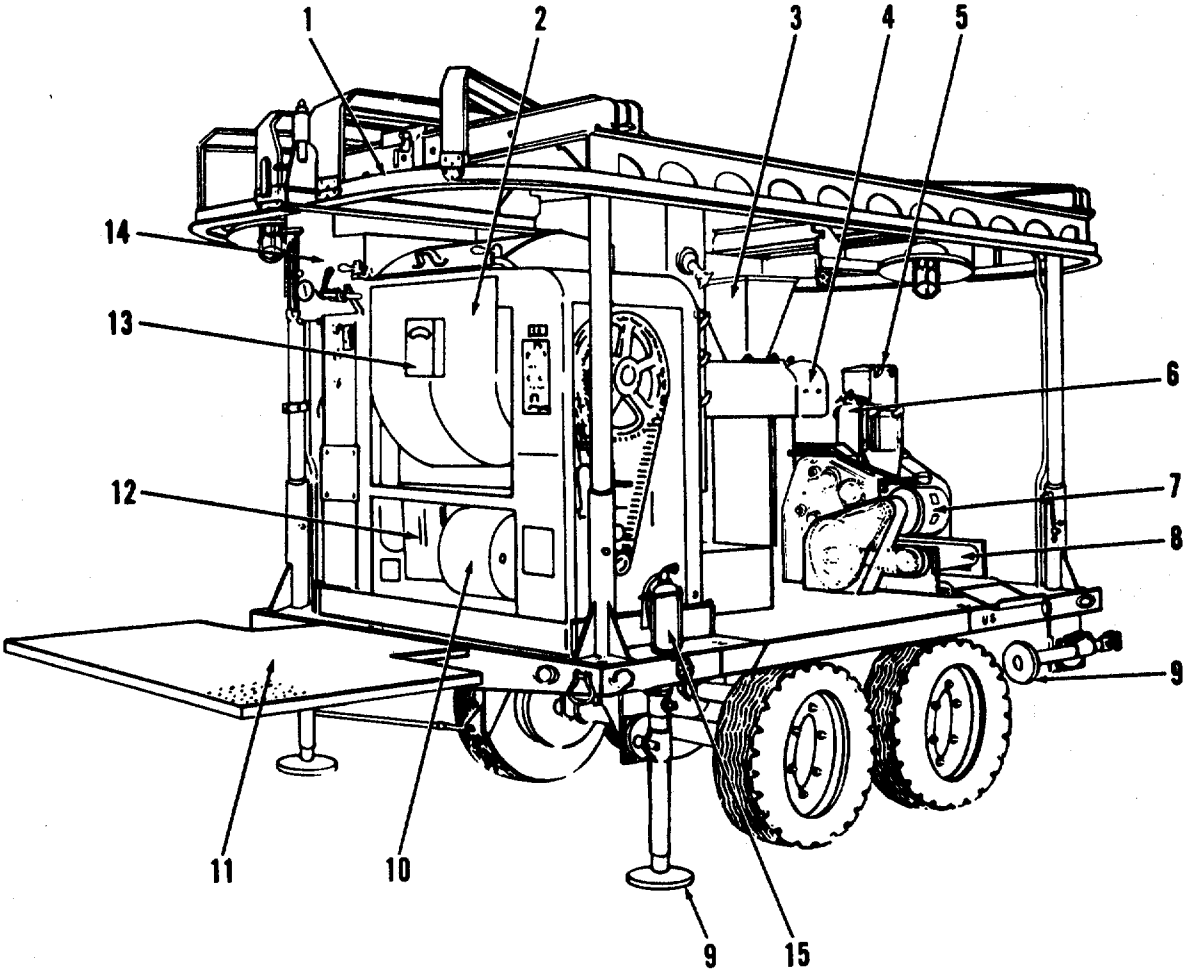

MIXING AND MAKEUP TRAILER (REAR VIEW)

1-6. LOCATION AND DESCRIPTION OF MAJOR COMPONENTS - Continued

DIVIDER CONVEYOR BELT UPPER DUSTER (1). Dusts flour onto the dough to prevent if from sticking to the divider conveyer belt.

MONORAIL (2). Moves the dough.

POWER PANEL (3). Controls electrical power for the equipment and lighting.

WATER-TEM PERING TAN K (4). Provides mixing water supply.

DOUGH TROUGH CARRIER (5). Attaches dough trough to monorail.

DOUGH TROUGH (6). Carries dough along monorail.

DUMP HANDWHEEL (7). Raises and lowers the mixer for loading and unloading the dough from the mixer to dough trough.

DIVIDER OIL PUMP (8). Lubricates the dough box to prevent the dough from sticking to the knife and plunger mechanism.

DIVIDER CONVEYOR BELT LOWER DUSTER (9). Dusts flour onto dough to prevent if from sticking to the molder conveyor belt.

FRONT CASTER DISK WH EEL ASSEM BLY (10). Aids in maneuvering trailer.

LUNETTE EYE (11). Hooks the trailer to a towing vehicle.

SAFETY CHAIN (12). Secures hookup of the trailer.

MOLDER CONVEYOR (13). Transports dough from rolls to discharge plate.

MOLDER ASSEMBLY (14). Flattens, curls, and shapes the dough piece into a compact loaf.

DIVIDER CONVEYOR (15). Carries the dough piece to the molder.

MOLDER SHEETING ROLL DUSTER (16). Dusts flour onto the dough.

INCANDESCENT LAMP (17). Provides light for operator.

1-6. LOCATION AND DESCRIPTION OF MAJOR COMPONENTS - Continued

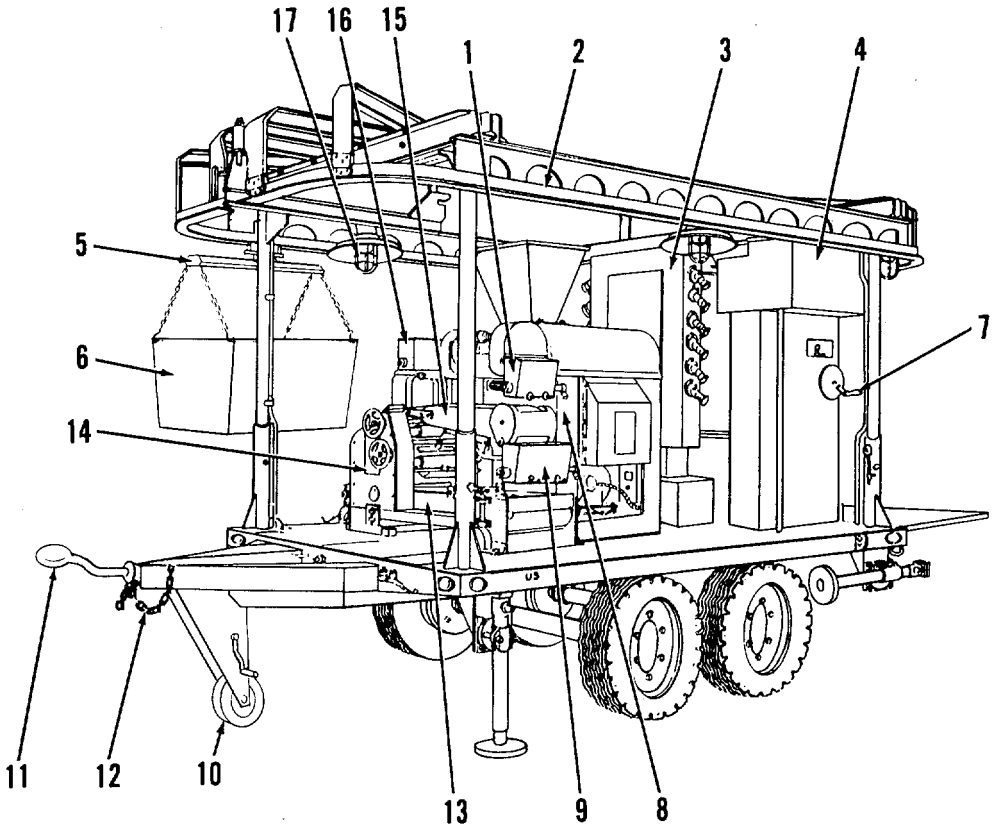

MIXING AND MAKEUP TRAILER (FRONT VIEW)

1-6. LOCATION AND DESCRIPTION OF MAJOR COMPONENTS--Continued

CONVEYOR DRIVE SHAFT CRANK (1). Provides manual operation of conveyor.

CONVEYOR DRIVE SHAFT (2). Moves oven contents.

OVEN DOOR HANDLES (3). Operates oven doors.

OVEN DIAL THERMOMETER (4). Indicates baking temperature.

UPPER DECK (5). Seats loaves for baking.

LOWER DECK (6). Seats loaves for baking.

OVEN DOOR LOCKING KNOB (7). Secures oven door.

BLOWER MOTOR (8). Drives blower wheel to circulate heated air to maintain a uniform baking temperature throughout the oven.

BLOWER RECESS (9). Mounts blower motor and belt drive.

STORAGE COMPARTMENT (10). Stores Equipment.

FUEL TANK (11). Stores fuel for the gravity-feed, pot-type burner.

FUEL TANK CAP (12). Caps fuel filler.

FUEL TANK GAGE (13). Indicates amount of fuel in tank.

ACCESS DOORS (14). Provides access for cleaning heat exchanger tubes.

PRESSURE RELIEF SHEETS (15). Relieves oven pressure in case of a blowout.

LUN ETTE EYE (16). Hooks the trailer to a vehicle.

SAFETY CHAIN (17). Secures hookup of the trailer.

FRONT CASTER DISK WHEEL ASSEMBLY (18). Aids in maneuvering trailer.

LEVELING-SUPPORT JACK (19). Levels oven trailer.

STORAGE COMPARTMENT (20). Stores equipment.

BURNER ASSEMBLY (21). Lights oven.

CONTROL PANEL ACCESS DOOR (22). Conceals control panel.

1-6. LOCATION AND DESCRIPTION OF MAJOR COMPONENTS - Continued

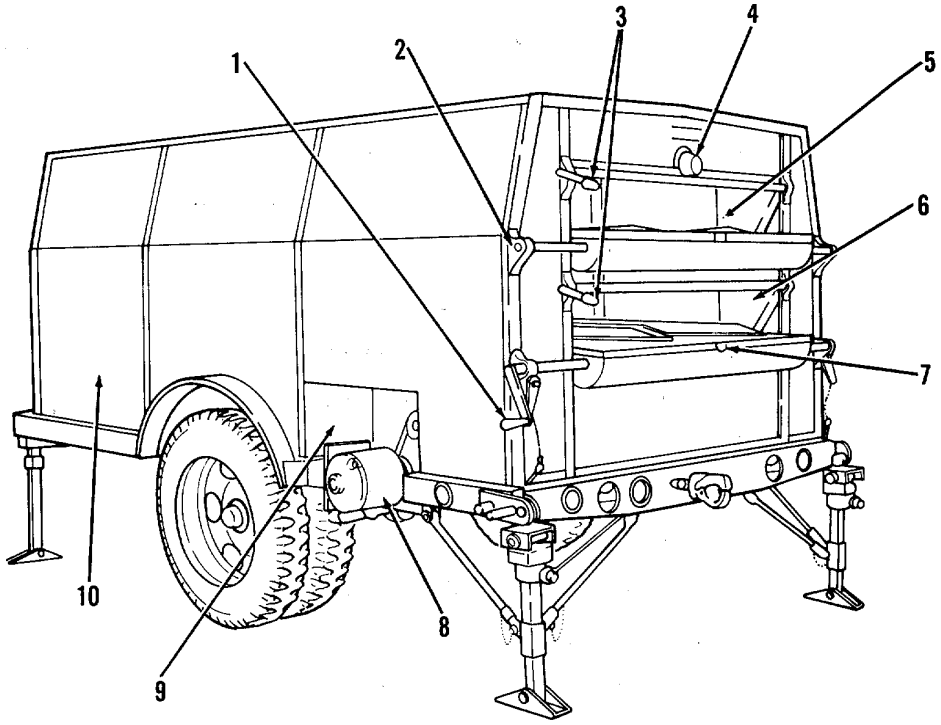

OVEN TRAILER, REAR VIEW

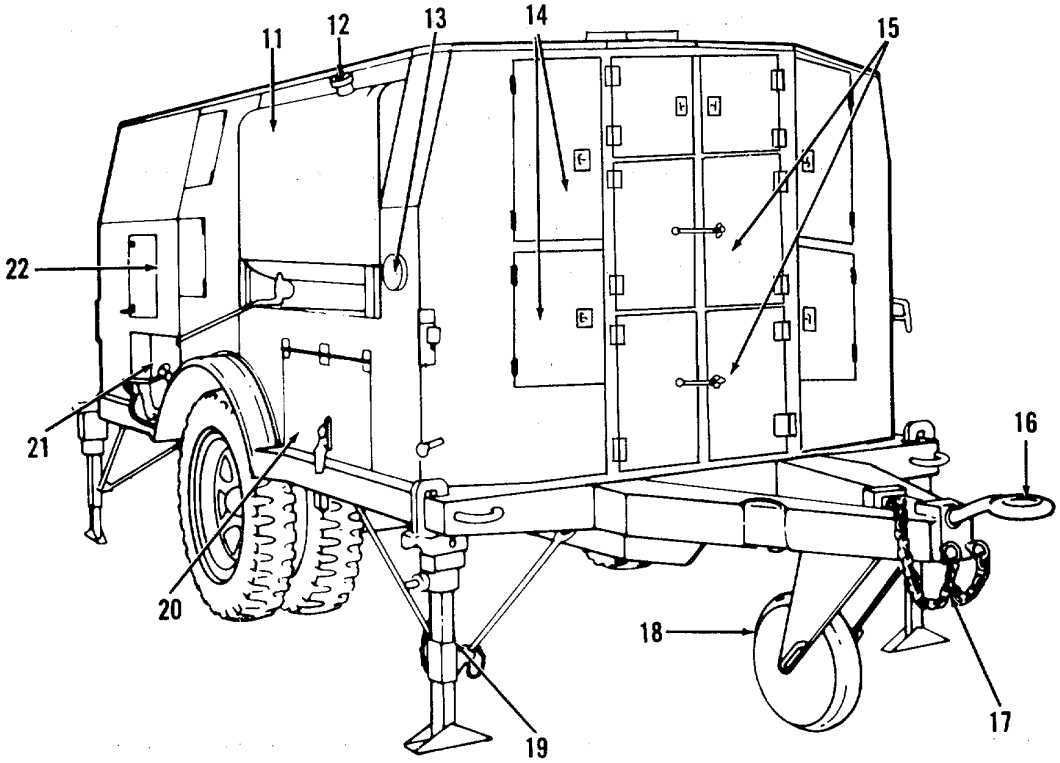

OVEN TRAILER, FRONT VIEW

1-6. LOCATION AND DESCRIPTION OF MAJOR COMPONENTS - Continued

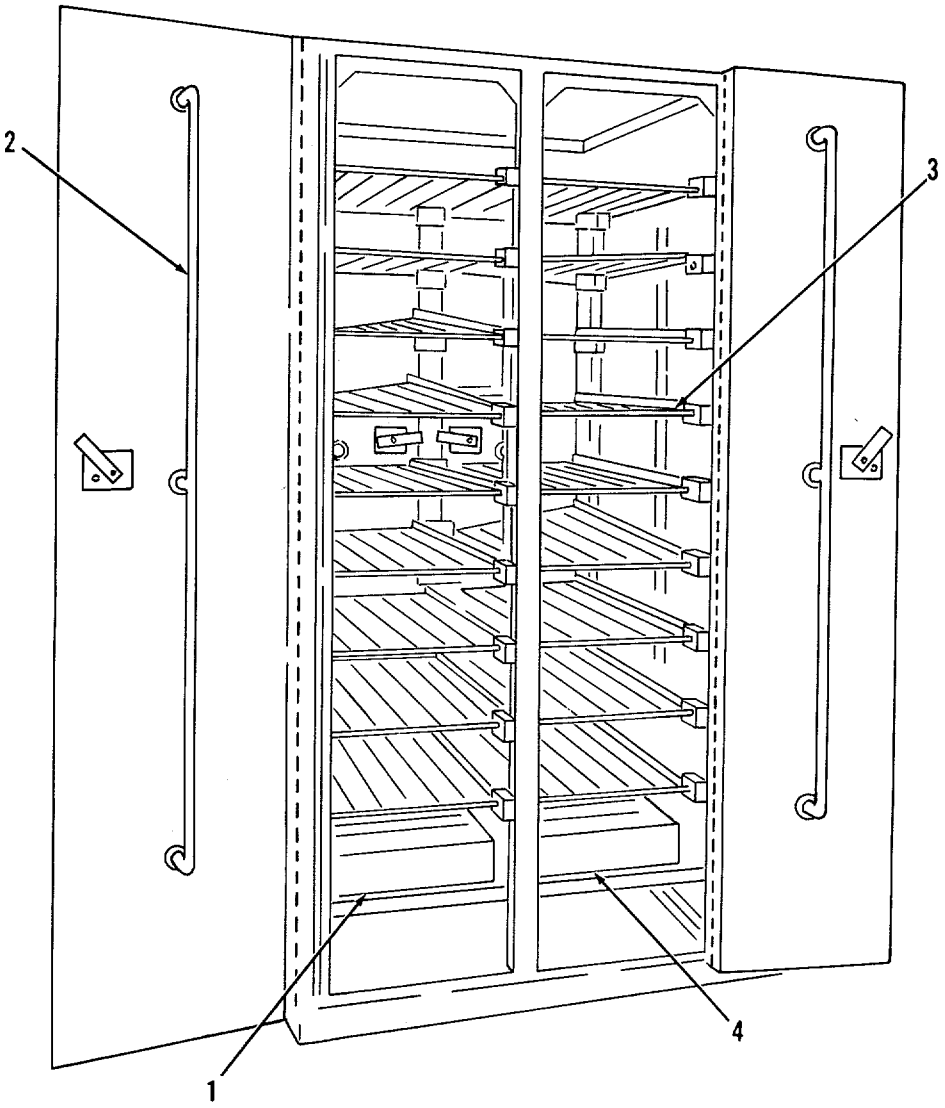

PROOFING CABINET

HEATING ELEMENT (1). Provides thermostatic - controlled heat to the insulated cabinet.

RETAINING BAR (2). Prevent the racks from becoming disengaged from their anchor slots.

Access doors are also provided at the rear of the cabinet.

RACK ASSEMBLY (3). Contains nine horizontal racks that hold four bread pans each. The racks are removable for cleaning and drying the equipment.

WATER PAN (4). Provides a humid environment for the proofing.

1-6. LOCATION AND DESCRIPTION OF MAJOR COMPONENTS - Continued

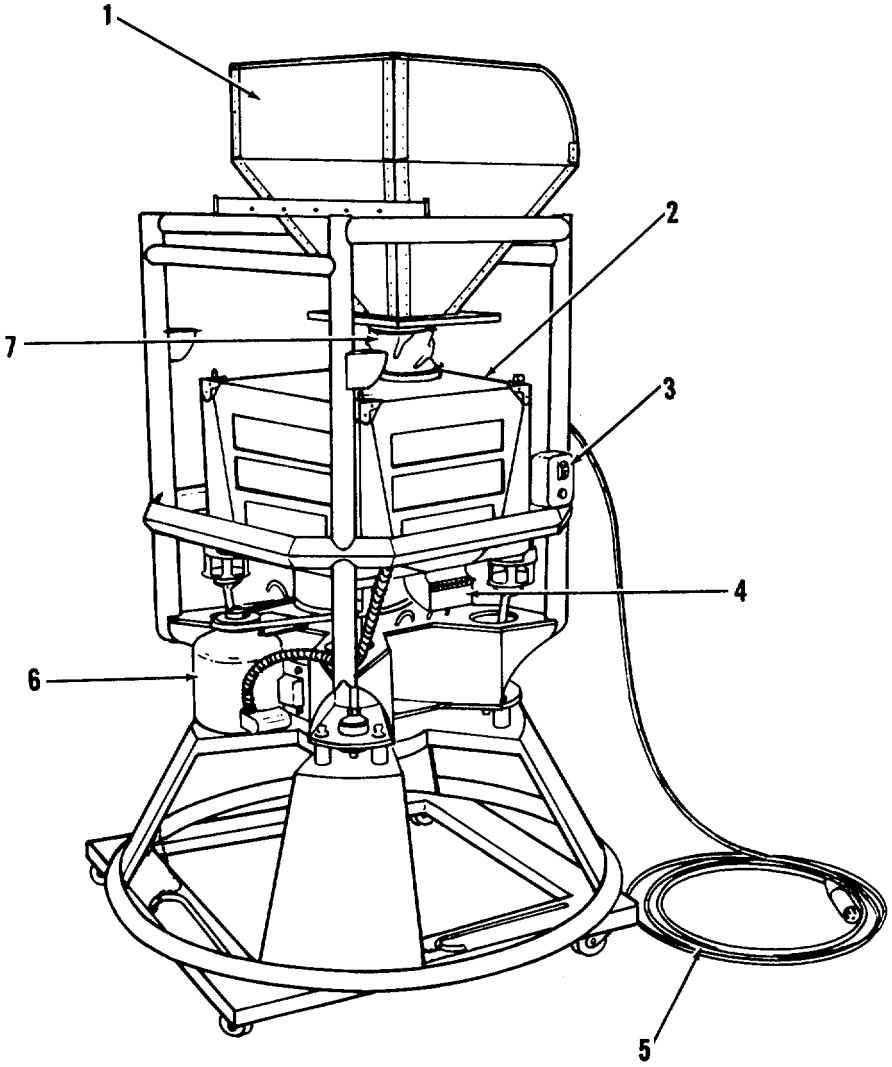

FLOUR SIFTER, FRONT VIEW

FEED HOPPER (1). Feeds flour to sifter.

SLIDE (2). Gates flour from feed hopper into sifting mechanism.

STARTER SWITCH (3). Manual ON/OFF control of sifter motor.

DISCHARGE HOPPER (4). Feeds flour from sifter into flour sack.

POWER CABLE (5). Connects sifter to electrical power source.

SIFTER MOTOR (6). Drives sifting mechanism.

CLOTH TUBE (7). Channels flour from feed hopper into sifting mechanism.

1-7. DIFFERENCES BETWEEN MODELS

BAKERY PLANT MODELS

	M-1945	M-1945-50	M-1945-53	M-534-68
Control Panels	2	1	1	1
Brakes.....	mechanical	electrical	hydraulic	hydraulic
Air Compressor	Yes	Yes	Yes	Yes

Notes: (1) Separate control panels: one for power and one for lighting.
Central power panel: for both power and lighting.
(2) Hydraulic brakes are air-actuated.
(3) Air Compressor, Johnson Model 110 LAG, NSN 4310-00-631-5693, air reciprocating, electric driven, 2.7 CFM, 80 PSI, is provided for furnishing compressed air for cleaning purposes. Reference TM 5-4310-252-12 for repair.

1-8. EQUIPMENT DATA

a. Mixing and Makeup Trailer

Trailer

Height.....	9 feet 3 inches (281.9 centimeters)
Length (work platform lowered).....	20 feet 1 inch (612.1 centimeters)
Width (monorail extended)	11 feet 9 inches (358.1 centimeters)
Weight (approximate)	11,000 pounds (4,989.6 kilograms)
Ground clearance (M795)	12 inches (30.5 centimeters)
Work platform height (M795)	3 feet (91.4 centimeters)
Width (M795)	8 feet 1 inch (246.4 centimeters)
Length (M795).....	16 feet 5.5 inches (501.6 centimeters)
Total weight (M795)	13,120 pounds (5,951.2 kilograms)
Bridge weight classification (M795).....	8

Mixer Assembly

Bowl:	
Capacity of wet dough ingredients	496 pounds (224.9 Kilograms)
Tilt.....	90 degrees
Water-tempering tank:	
Capacity in gallons	30 gallons (113.6 liters)
Capacity in pounds	250 pounds (113.6 Kilograms)

1-8. EQUIPMENT DATA - Continued

a. Mixing and Makeup Trailer - Continued

Divider Assembly

Capacity (loaves per minute)	20
Weight limit of each dough piece	34 to 38 oz (967.9 to 1073 grams), with the desired weight of 36 oz (1020.5 grams)

Molder Assembly

Capacity (loaves per minute)	20

Monorail System

Length (open)	14 feet 3 inches (434.3 centimeters)
Width (open)	10 feet 3 inches (312.4 centimeters)

Dough Troughs

Number	5
Capacity of each (in dough)	500 pounds (226.8 kilograms)
Weight of each (with cover)	230 pounds (104.3 kilograms)

Air Compressor

Delivery	2.7 CFM
Rated pressure	80 psi
Power requirements	115 V, 60 hz,1 phase

b. Oven Trailer

Trailer

Length	16 feet 1 inch (490.2 centimeters)
Length (M533 bakery oven)	16 feet 3.25 inches(495.9 centimeters)
Width	7 feet 4 inches (223.5 centimeters)
Width (M533 bakery oven)	8 feet (243.8 centimeters)
Weight	6,500 pounds (2,948.4 kilograms)
Weight (M533 bakery oven)	7,790 pounds (3,533.5 kilograms)

1-8. EQUIPMENT DATA - Continued

b. Oven Trailer- Continued

Fuel	
Gasoline	(MOGAS-TYPE 1, 91-A)
Capacity of tank	24 gallons (90.8 liters)
Consumption (per hour)	1 gallon (3.8 liters)
Oven	
Capacity of oven (in pans)	36
Capacity of pans (in 2-pound loaves)	6

c. Proofing Cabinet

Capacity:	
Bread pans	36
Water pans	4
Dimensions:	
Height	5 feet 10 inches (177.8 centimeters)
Width	5 feet 10 inches (177.8 centimeters)
Model C-PB30623	5 feet 8 inches (172.7 centimeters)
Depth	2 feet 4 inches (71.1 centimeters)
Model C-PB30623	2 feet 7 inches (78.7 centimeters)
Weight	386 pounds (175.1 kilograms)

d. Flour Sifter

Capacity (per minute)	50 to 60 pounds (22.7 to 27.2 kilograms)
Dimensions (assembled):	
Height	5 feet 6.5 inches (168.9 centimeters)
Width and depth	3 feet 6 inches (106.7 centimeters)
Weight (complete)	210 pounds (95.3 kilograms)

1-8. EQUIPMENT DATA - Continued

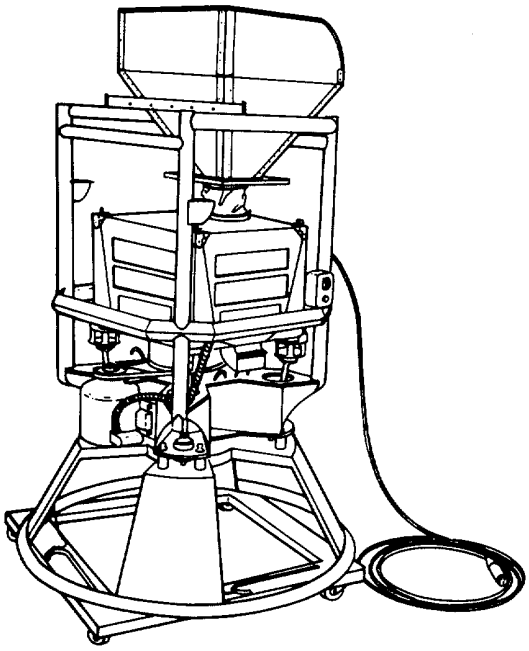

SIFTER

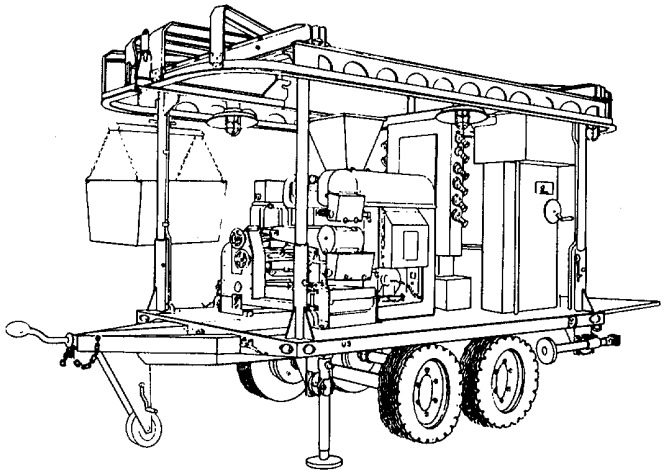

DOUGH MIXING AND MAKEUP OUTFIT TRAILER

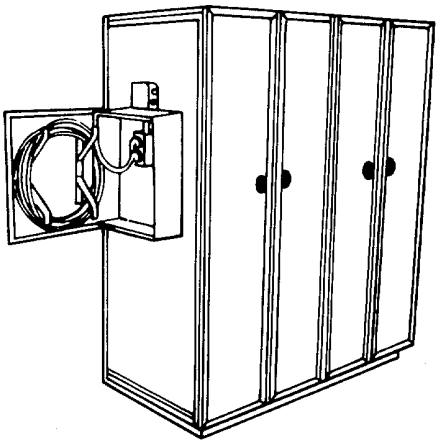

DOUGH PROOFING CABINET

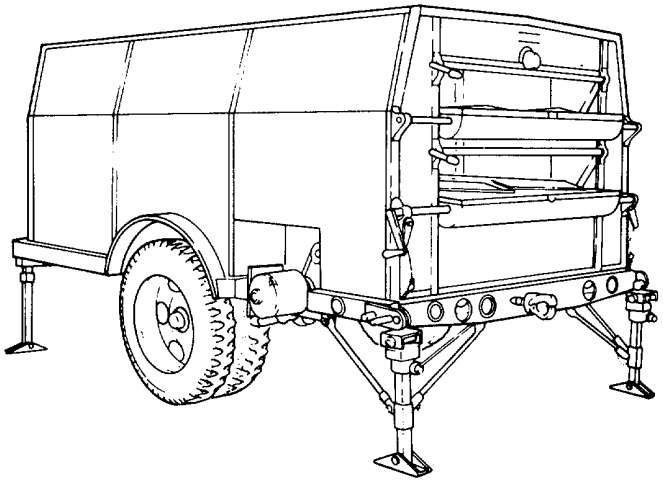

OVEN TRAILER

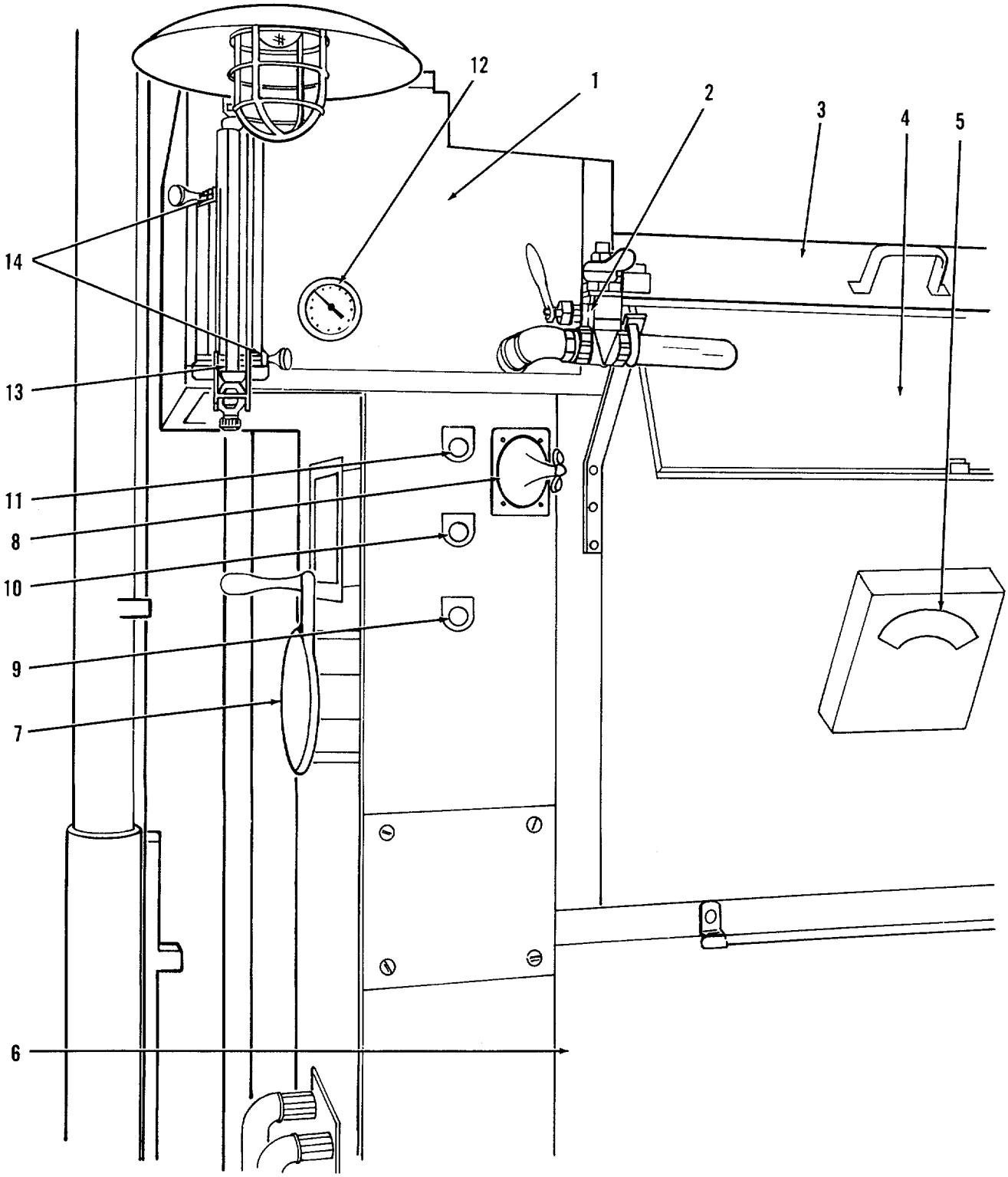

MIXER ASSEMBLY

CHAPTER 2
OPERATING INSTRUCTIONS

Section I. DESCRIPTION AND USE OF OPERATOR'S CONTROLS AND INDICATORS

2-1. DOUGH MIXING AND MAKEUP OUTFIT TRAILER

a. Mixer Assembly

KEY	CONTROL OR INDICATOR	FUNCTION
1	Water-tempering tank	Provides supply of tempered water.
2	Tank outlet gate valve	Controls flow from water-tempering tank into mixer bowl.
3	Mixer bowl cover	Contains dough mix.
4	Mixer bowl	Mixes dough ingredients
5	Mixer bowl dial thermometer	Measures dough mix temperature.
6	Mixer motor access door	Conceals mixer motor and its magnetic starter.
7	Mixer bowl dump handwheel	Manual tilting of mixer bowl.
8	Water-transfer pump motor toggle switch	Manual control of water-transfer pump.
9	Jog pushbutton	Agitates the mixer bowl after it has been manually tilted. One and only one operator presses the jog pushbutton after he has pressed the start pushbutton. Both hands are required to operate the pushbuttons as a safety precaution.
10	Stop pushbutton	Stops the mixer.
11	Start pushbutton	Starts the mixer motor and jogs tilted mixer bowl, provided the mixer motor magnetic starter is energized and not overloaded.
12	Water-tempering tank dial thermometer	Measures ingredient water temperature.
13	Water-tempering tank measuring gage	Shows tank fill in pounds of water.
14	Measuring gage pointers	Left pointer is set at original water level. Right pointer is set at water level desired after correct amount has been added to the dough mix.

2.1. DOUGH MIXING AND MAKEUP OUTFIT TRAILER - Continued

b. Water Transfer System

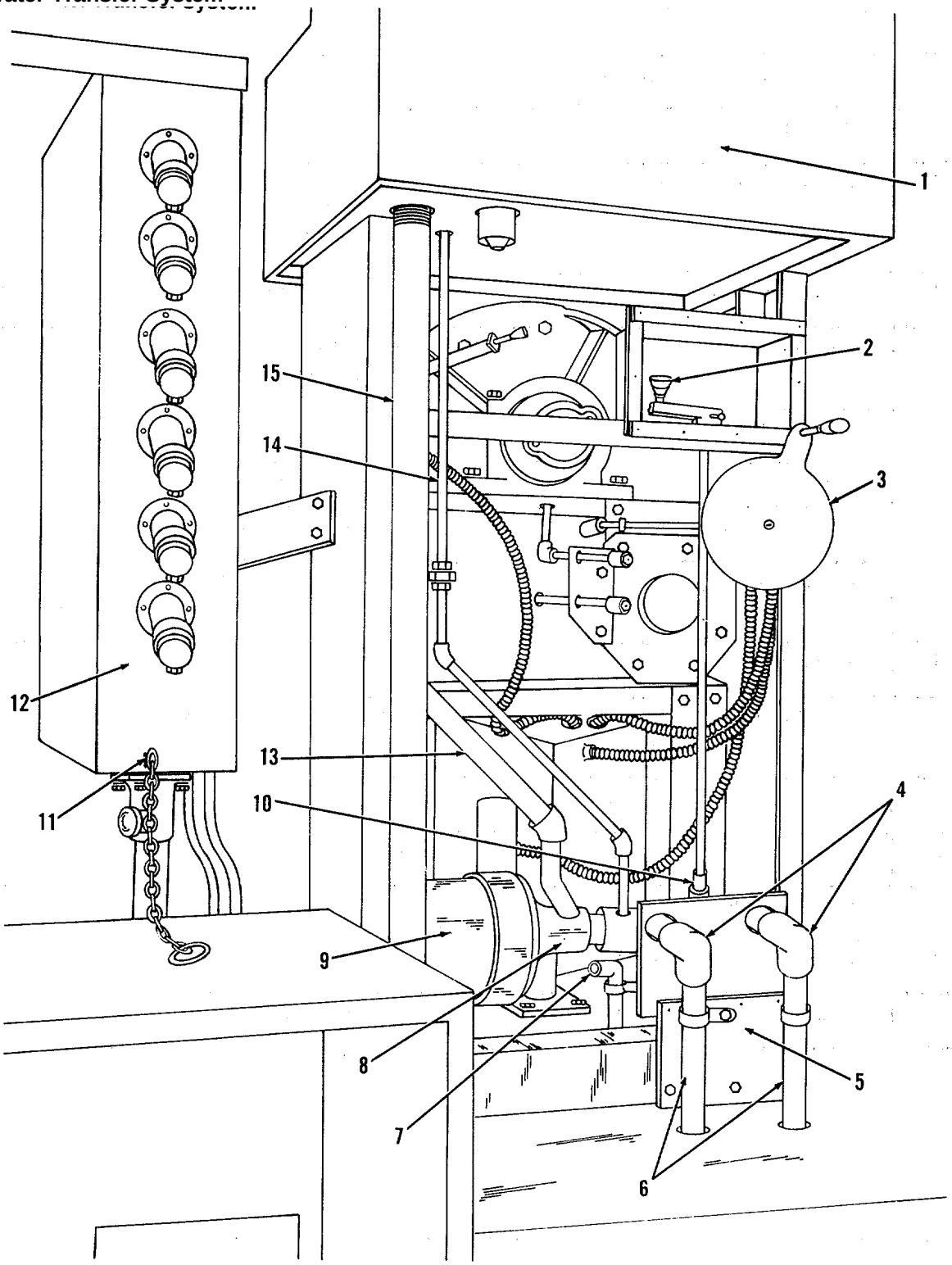

WATER TRANSFER SYSTEM

2-1. DOUGH MIXING AND MAKEUP OUTFIT TRAILER - Continued

b. Water Transfer System - Continued

KEY	CONTROL OR INDICATOR	FUNCTION
1	Water-tempering tank	Provides supply of tempered water.
2	Control valve handle	Operates three-way control valve that regulates the flow of hot and cold water to the water-tempering tank.
3	Mixer bowl dump handwheel	Manual tilting of mixer bowl.
4	Inlet hose pipes	Provides hot and cold water to the three-way control valve.
5	Inlet hose door	Opening for inlet hoses.
6	Inlet hoses	Connects hot and cold water supplies.
7	Pump drain valve	Drains water-transfer system.
8	Water-transfer pump	Pumps water from the three-way control valve to the water-tempering tank.
9	Pump motor	Drives the water-transfer pump
10	Inlet control valve	Three-way control valve operated by handle (2).
11	Power source connection	Electrical power distribution.
12	Power panel	Electrical power distribution control.
13	Pump-to-tank inlet pipe	Water connection.
14	Pump-to-tank primer pipe	Primes the water-transfer pump.
15	Water-tempering tank overflow pipe	Directs tank overflow beneath the trailer.

2-1. DOUGH MIXING AND MAKEUP OUTFIT TRAILER - Continued

c. Divider and Molder Assemblies

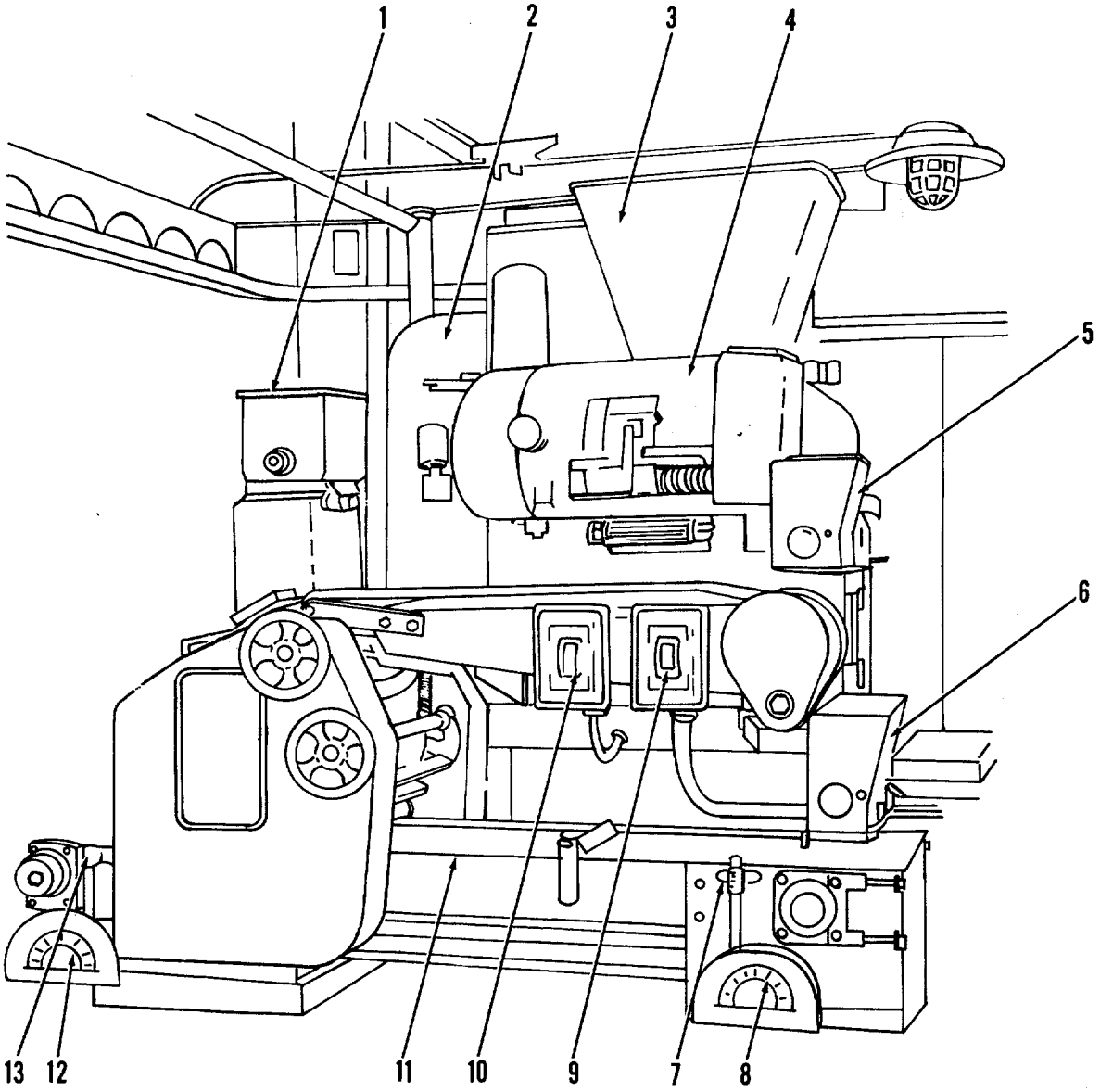

DIVIDER AND MILDER ASSEMBLIES

2-1. DOUGH MIXING AND MAKEUP OUTFIT TRAILER--Continued

c. Divider and Molder Assemblies - Continued

KEY	CONTROL OR INDICATOR	FUNCTION
1	Molder sheeting roll duster	Dusts with flour so dough does not stick to molder sheeting rolls.
2	Divider scale	Checks weight of each dough piece issued from divider pocket.
3	Divider hopper	Feeds dough to divider from mixer bowl.
4	Dough box cylinder	Contains divider dough pocket.
5	Upper duster	Dusts upper divider conveyer belt with flour.
6	Lower duster	Dusts lower divider conveyer belt with flour.
7	Pressure board control knob (right)	Regulates length of loaf issued from molder
. 8	Pressure board dial (right)	Indicates length of loaf as set by knob (7). As pointer moves right the loaf length increases; as pointer moves left the loaf length decreases.
9	Divider motor magnetic starter	Starts and stops divider motor.
10	Molder motor magnetic starter	Starts and stops molder motor. Push ON or OFF at the same time starter (9) is pushed ON or OFF.
11	Molder conveyer belt	Conveys dough pieces through molder.
12	Pressure board dial (left)	Indicates length of loaf as set by knob (13).
13	Pressure board control knob (left)	Set for similar reading on dial (12) as on dial (8).

2-1. DOUGH MIXING AND MAKEUP OUTFIT TRAILER - Continued

c. Divider and Molder Assemblies - Continued

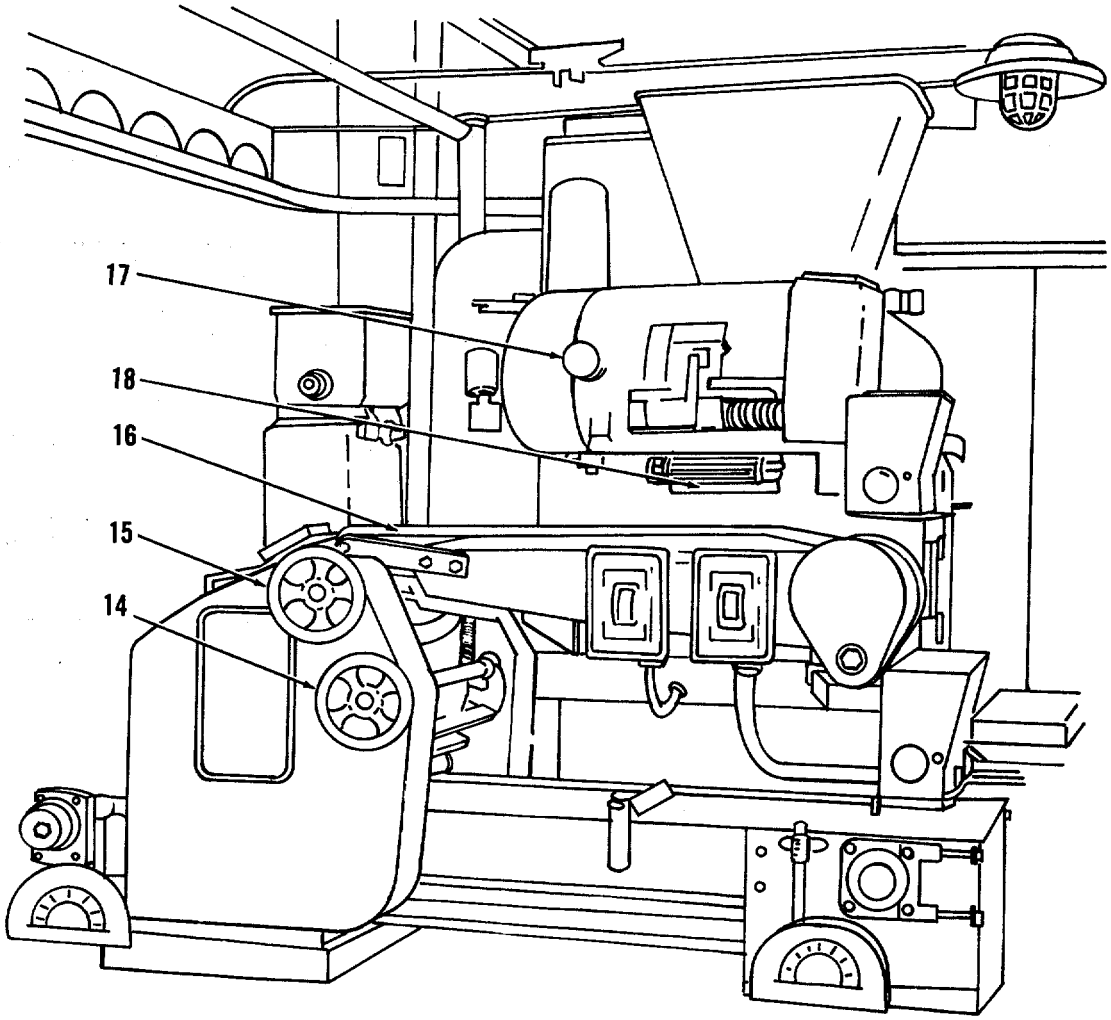

DIVIDER AND MOLDER ASSEMBLIES

2-1. DOUGH MIXING AND MAKEUP OUTFIT TRAILER Continued

c. Divider and Molder Assemblies - Continued

KEY	CONTROL OR INDICATOR	FUNCTION
14	Lower sheeting roll adjusting handwheel	Adjusts the distance between the lower pair of sheeting rolls. Turn clockwise to increase the dough piece size; turn counterclockwise to decrease the dough piece size.
15	Upper sheeting roll adjusting handwheel	Adjusts the distance between the upper pair of sheeting rolls. Must be adjusted similarly to handwheel (14) for proper operation of molder.
16	Divider conveyor belt	Conveys dough pieces from the divider.
17	Cylinder screw knob	Regulates size of dough piece issued from the divider. Turn clockwise to decrease the dough piece size; turn counterclockwise to increase the dough piece size.
18	Drop off gage wheel	Regulates the drop of dough piece as it falls to conveyor belt.

2-1. DOUGH MIXING AND MAKEUP OUTFIT TRAILER--Continued

d. Divider Dusters

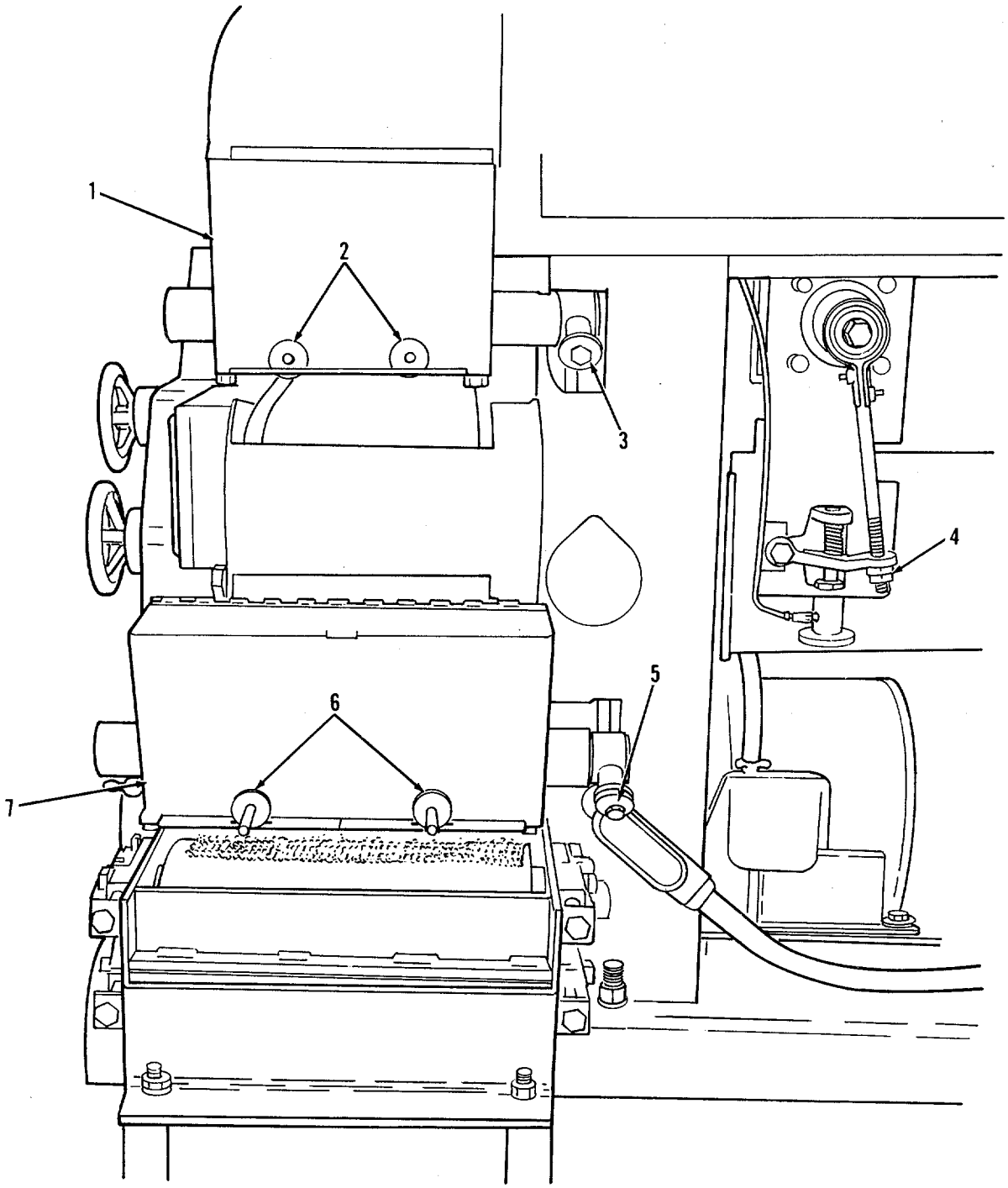

DIVIDER DUSTERS

2.1. DOUGH MIXING AND MAKEUP OUTFIT TRAILER-- Continued

d. Divider Dusters - Continued

KEY	CONTROL OR INDICATOR	FUNCTION
1	Upper duster	Dusts upper divider conveyor belt with flour to prevent dough from sticking.
2	Upper duster adjusting knobs	Regulate amount of flour dusted. Right knob controls dusting of right edge of belt; left knob controls dusting of left edge of belt. Turn knobs counterclockwise to increase amount of flour dusted and clockwise to decrease amount of flour dusted. More flour is always dusted in the center than at the edges of belts.
3	Upper duster lever knob	Stops duster with divider in operation by pulling out and twisting to secure knob in OUT position.
4	Oil pump drive rod nut	Regulates the amount of oil pumped to dough contact parts of divider. Turn up to increase oil flow; turn down to decrease oil flow.
5	Lower duster lever knob	Similar to knob (3).
6	Lower duster adjusting knobs	Similar to knobs (2).
7	Lower duster	Similar to duster (1).

2-2. OVEN TRAILER

a. Oven Control Panel

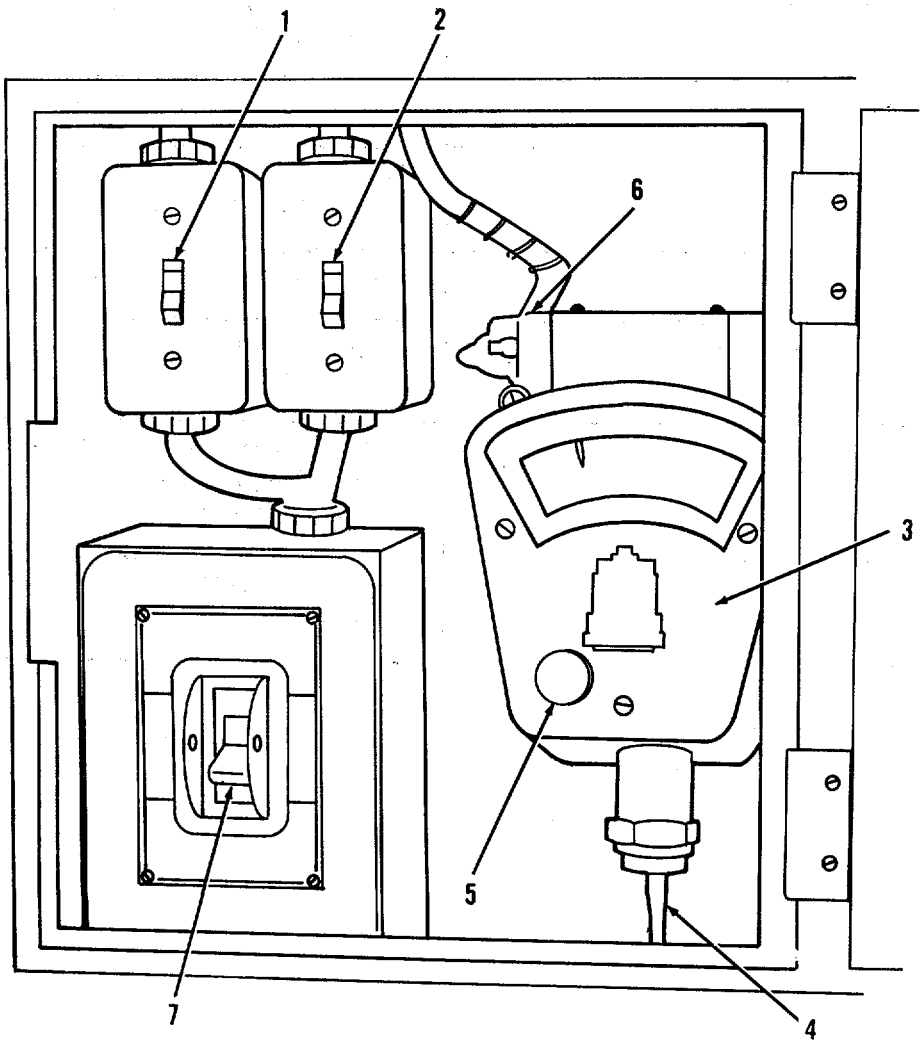

OVEN CONTROL PANEL

2-2. OVEN TRAILER - Continued

a. Oven Control Panel - Continued

KEY	CONTROL OR INDICATOR	FUNCTION
1	Oven burner switch	Permits proper lighting and shut down of oven burner.
2	Oven light switch	Turns oven light on and off.
3	Temperature indicating control	Indicates flue temperature and operates with burner to set baking temperature.
4	Sensor cable	Connects to temperature sensor.
5	Pointer adjusting knob	Adjusts pointer to set regulated oven temperature.
6	Magnetic valve conduit wiring	Connects temperature indicating control with magnetic valve in burner to maintain even oven temperature.
7	Oven motor starter	Manual operation of the oven blower motor.

2-2. OVEN TRAILER - Continued

b. Oven Fuel Tank

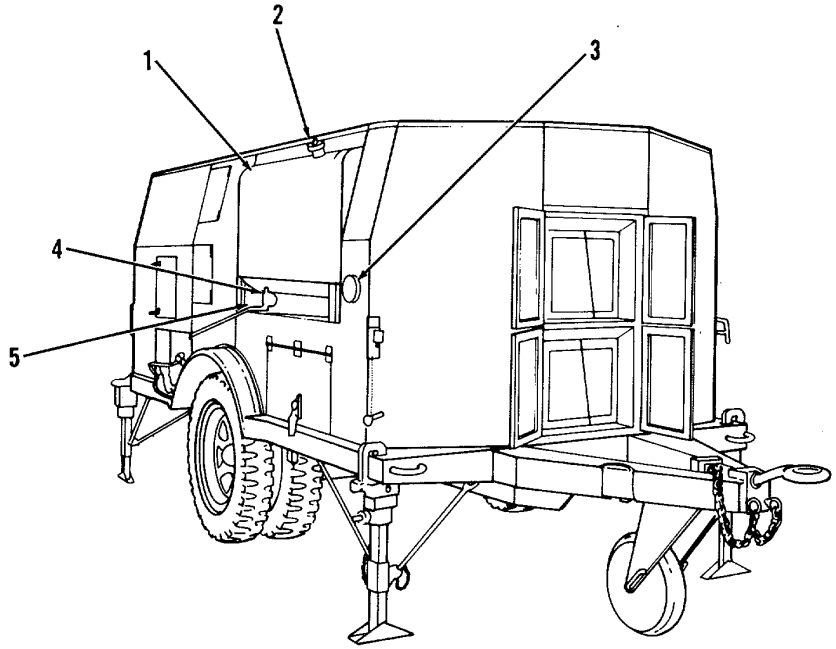

OVEN FUEL TANK

KEY	CONTROL OR INDICATOR	FUNCTION
1	Fuel tank	Provides supply of burner fuel.
2	Tank cap	Caps tank filter.
3	Tank gage	Indicates amount of fuel in the tank.
4	Shutoff gate valve	Shuts off fuel from the tank to the filter.
5	Shutoff valve plug	Provides access to gate valve outlet.

2-2. OVEN TRAILER - Continued

c. Oven Burner

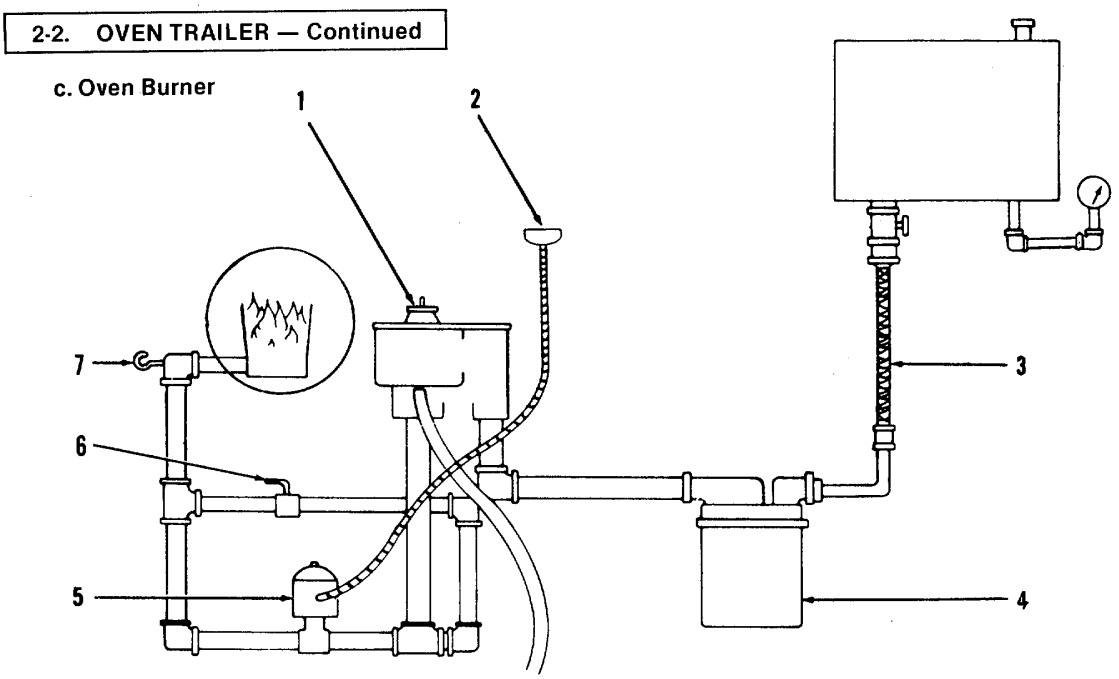

OVEN BURNER ASSEMBLY

KEY	CONTROL OR INDICATOR	FUNCTION
1	Fuel metering float valve	Controls the amount of fuel flowing to burner.
2	Magnetic valve conduit	Contains magnetic valve to temperature indicating control wiring.
3	Tank-to-filter line	Connects filter and fuel tank shutoff valve.
4	Fuel filter assembly	Fuel filtering.
5	Magnetic valve	Electrically operated in conjunction with temperature indicating control to maintain a stable oven baking temperature.
6	Bypass valve	Permits manual operation of the burner on "high flame", if the magnetic valve fails to function.
7	Burner cleanout rod	Manual cleaning of fuel passage to vaporizing cup.

2-2. OVEN TRAILER - Continued

c. Oven Burner - Continued

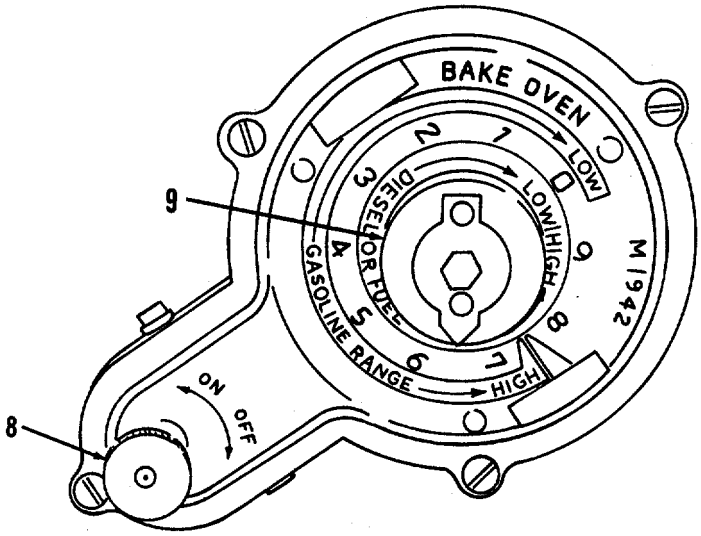

FUEL METERING FLOAT VALVE

KEY	CONTROL OR INDICATOR	FUNCTION
8	Stop screw knob	Governs the flow of fuel entering the float chamber of metering valve.
9	Adjusting screw	Governs the amount of fuel leaving the float chamber of metering valve. To increase flow turn counterclockwise; to decrease flow turn clockwise. Pointer is usually set at 3 to start and at 7 1/2 or 8 during usual oven operation.- .

2-2. OVEN TRAILER - Continued

d. Burner Recess

KEY	CONTROL OR INDICATOR	FUNCTION
1	Blower motor cable receptacle	Connects blower motor to the starter in the oven control panel.
2	Magnetic valve conduit receptacle	Connects the magnetic valve and temperature indicating control in the oven control panel.
3	Burner sight gage	Allows operator to look into combustion chamber during firing.
4	Oven burner handle	Locks the burner in open or closed position.
5	Burner opening cover	Closes off combustion chamber.
6	Lighting torch holder	Stowage of lighting torch.
7	Lighting torch	Lights burner by insertion in lighting hole to vaporizing cup.

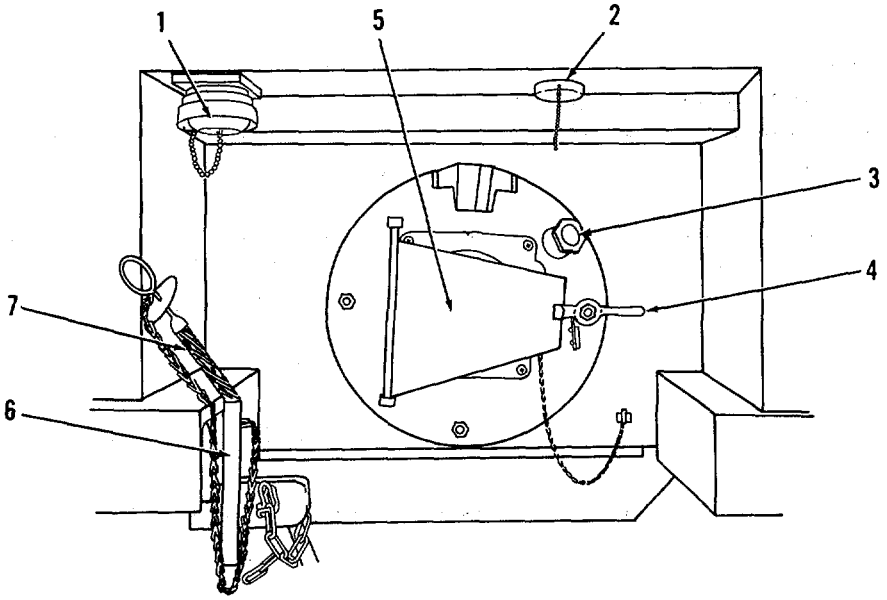

BURNER RECESS

2.2. OVEN TRAILER - Continued

e. Blower Motor Recess

KEY	CONTROL OR INDICATOR	FUNCTION
1	Blower wheel V-belt drive	Drives blower shaft pulley.
2	Blower shaft pulley	Rotates blower wheel.
3	Oil level liquid sight indicator	Indicates lubricating oil level.
4	Motor bracket stiffener	Secures blower motor for proper V-belt tension.
5	Motor cable	Connects blower motor to receptacle in burner recess.
6	Blower motor	Powers blower.

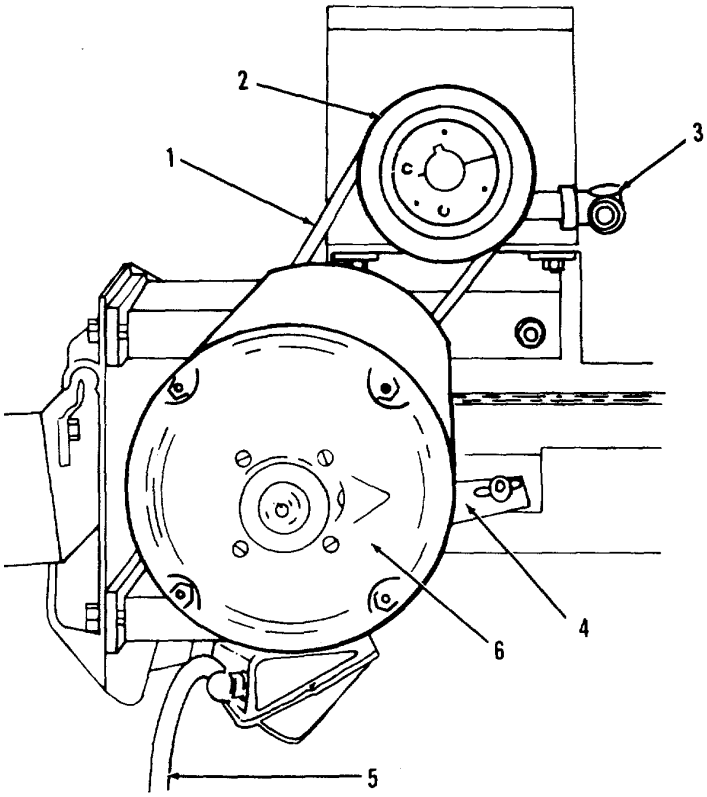

BLOWER MOTOR RECESS

2-3. PROOFING CABINET

KEY	CONTROL OR INDICATOR	FUNCTION
1	Thermostat	Maintains proper proofing temperature (about 95°F(35°C)) within the cabinet.
2	Indicator light	Indicates when electrical power is being transmitted to cabinet.
3	Access door knobs	Opening and closing of doors.
4	Power cable	Connects cabinet to electrical power source.

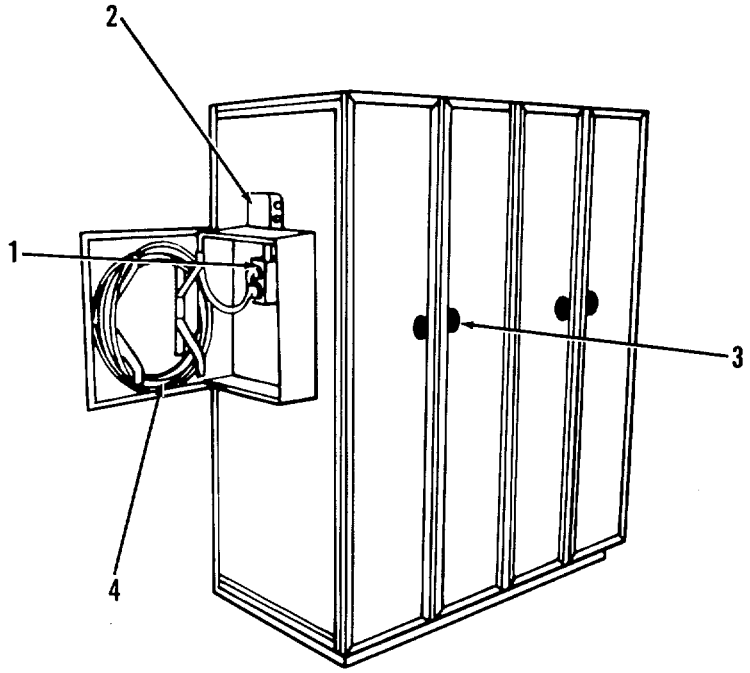

PROOFING CABINET

2.4. FLOUR SIFTER

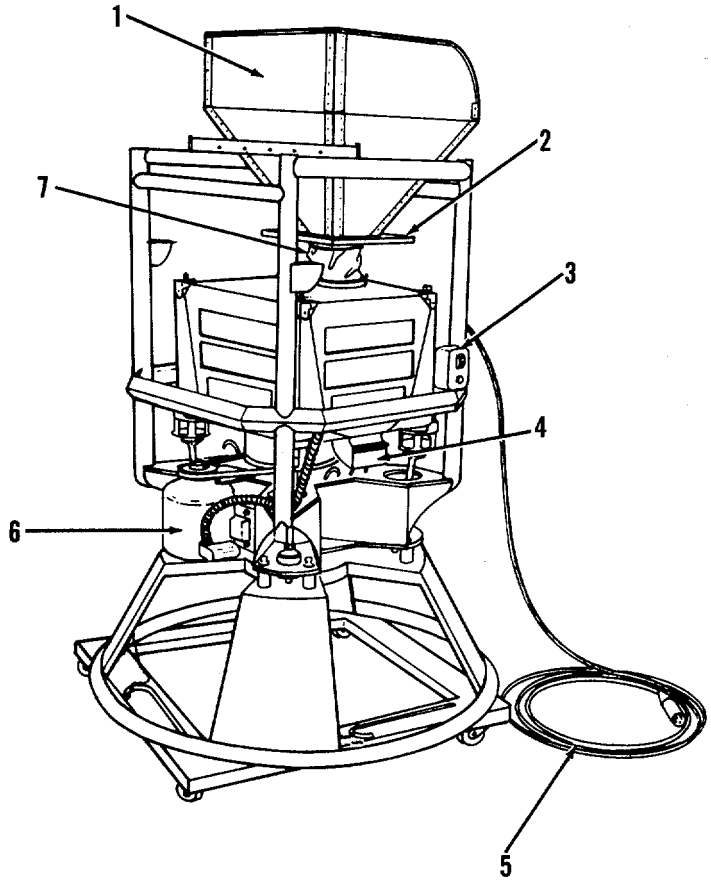

FLOUR SIFTER

2 4. FLOUR SIFTER - Continued

KEY	CONTROL OR INDICATOR	FUNCTION
1	Feed hopper	Feeds flour to sifter.
2 .	Slide	Gates flour from feed hopper into sifting mechanism
3	Starter switch	Controls power to sifter motor.
4	Discharge hopper	Feeds flour from sifting box into flour sack.
5	Power cable	Electrical power connection.
6	Sifter motor	Drives sifting mechanism.
7	Cloth tube	Channels flour from feed hopper.

Section II. PREVENTIVE MAINTENANCE CHECKS AND SERVICES (PMCS)

2-5. GENERAL

a. Before you operate, always keep in mind the CAUTIONS and WARNINGS. Perform your before (B) PMCS.

b. While you operate, always keep in mind the CAUTIONS and WARNINGS. Perform your during (D) PMCS.

c. After you operate, be sure to perform your after (A) PMCS.

d. If your equipment fails to operate, troubleshoot with proper equipment. Report any deficiencies using the proper forms. See DA PAM 738-750.

2-6. PMCS PROCEDURES

a. Your Preventive Maintenance Checks and Services table lists the inspections and care of your equipment required to keep it in good operating condition.

b. The interval column of your PMCS table tells you when to do a certain check or service: before (B), during (D), after (A).

c. If the equipment must be kept in continuous operation, check and service only those items that can be checked and serviced without disturbing operation. Make the complete checks and services when the equipment can be shut down.

d. Perform weekly as well as before operations PMCS if:
(1) You are the assigned operator and have not operated the item since the last weekly.
(2) You are operating the item for the first time.

e. Leakage definitions for operator/crew PMCS shall be classified as follows:

Class I Seepage of fluid (as indicated by wetness or discoloration) not great enough to form drops.

Class II Leakage of fluid great enough to form drops but not enough to cause drops to drip from item being checked/inspected.

Class III Leakage of fluid great enough to form drops that fall from the item being checked/inspected.

CAUTION

Equipment operation is allowable with minor leakages (Class I or II). Of course, you must consider the fluid capacity in the item/system being checked inspected.

When operating with Class I or Class II leaks, continue to check fluid levels as required in your PMCS.

Class III leaks should be reported to your supervisor or organizational maintenance.

f. The procedure column of your PMCS table tells you how to do the required checks and services. Carefully follow these instructions. If you do not have the tools, or if the procedure tells you to, have organizational maintenance do the work.

g. If your equipment does not perform as required, refer to Chapter 3 under Troubleshooting for possible problems. Report any malfunctions or failures on the proper DA Form 2404, or refer to DA PAM 738-750.

h. The terms ready/available and mission capable refer to the same status: Equipment is on hand and is able to perform its combat missions (See DA PAM 738-750).

2-6. PMCS PROCEDURES-- Continued

i. Remove covers and open or remove access doors/panels only as required to visually inspect. If additional disassembly and reassembly beyond steps normally done in setting up and operational procedures are required to determine or repair actual defect, contact organizational maintenance or consult TM 10-7360-201-20.

2-7. PMCSTABLE

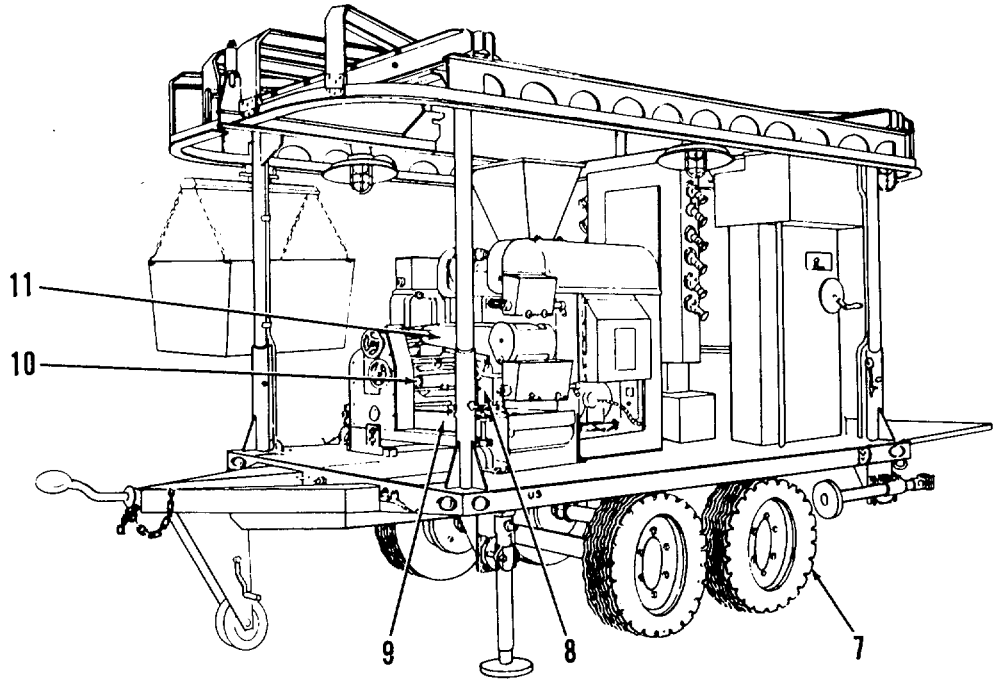

MIXING AND MAKEUP OUTFIT TRAILER (FRONT)

B - Before Operation D - During Operation A - After Operation

ITEM NO.	INTERVAL B	D	A	ITEM TO BE INSPECTED PROCEDURE	Equipment Is Not Ready/Available If:
1	•			POWER **PANEL** CIRCUIT **BREAKERS,'PLUGS, CONNECTORS, AND** RECEPTACLES. Check for loose mounting and connections.	Inoperative
2			•	WATER TEMPERING TANK. Clean tank. Check for leaks.	Unsanitary
3		•	•	**VALVE, (CONTROL).** Check for leaks.	
4				WATER TRANSFER PUMP AND PIPING. Check for leaks.	Inoperative
5	•			**VALVES, (CHECK).** Check for leaks.	
6			•	**DOUGH TROUGH.** Clean dough trough	Unsanitary

2-7. PMCSTABLE-Continued

ITEM NO.	INTERVAL B	D	A	ITEM TO BE INSPECTED PROCEDURE	Equipment Is Not Ready/Available If:
7 8 9 10 11	•			**TIRES.** Inflate 900-20 tires to 45 psi. Inflate 750-20 tires to 75 psi. Replace missing valve caps. Remove foreign matter from tires. Check for badly worn, damaged, or defective tires. (Weekly)	Deflated
			•	**DOUGH CURLER BELT.** Clean belt.	Inoperative
			•	**MOLDER CONVEYOR BELT.** Clean belt.	Inoperative
			•	**SHEETING ROLL SHAFTS**. Clean roller shafts and coat with divider oil.	
			•	**DIVIDER CONVEYOR BELT**. Clean belt.	Inoperative

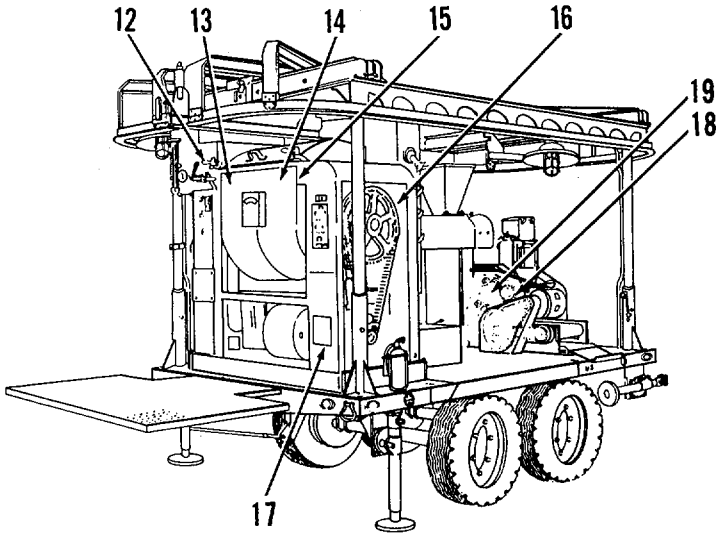

MIXING AND MAKEUP OUTFIT TRAILER (FRONT)

2-7. PMCSTABLE-Continued

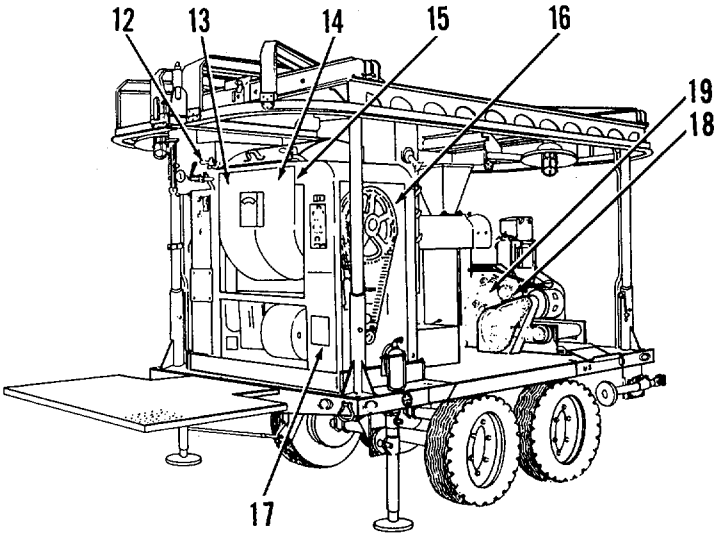

MIXING AND MAKEUP OUTFIT TRAILER (REAR)

ITEM NO.	INTERVAL B	D	A	ITEM TO BE INSPECTED PROCEDURE	Equipment Is Not Ready/Available If:
12	•	•		**VALVE, (OUTLET GATE).** Check for leaks. Check for loose mounting and connections.	
13	•		•	**AGITATOR.** Turn agitator by hand and see that it does not scrape against mixer bowl. Clean agitator and coat with divider oil.	Inoperative
14			•	**AGITATOR ROLLERS**. Free-up binding rollers. Clean rollers and coat with divider oil.	Binded
15			•	**MIXER BOWL ASSEMBLY**. Clean bowl and coat with divider oil. Check bowl for dents and open seams.	Unsanitary
16				**AGITATOR DRIVE CHAIN.** Check for worn, damaged, or defective chain.	Inoperative
17				**DIVIDER SILENT CHAIN.** Check for worn, damaged, or defective chain.	Inoperative
18				**DIVIDER COMPRESSION SPRINGS**. Check for worn, damaged, or defective springs.	Inoperative
19				**FRONT AND REAR SHEETING ROLL DRIVE CHAINS**. Check for worn, damaged, or defective chains.	

2-7. PMCS TABLE - Continued

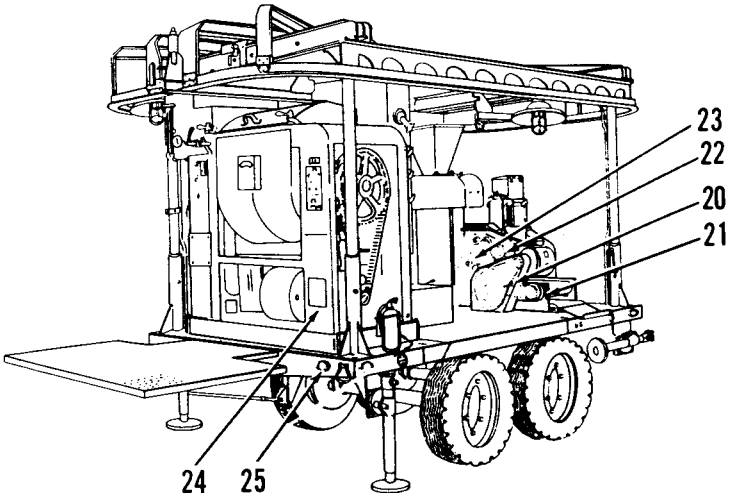

MIXING AND MAKEUP OUTFIT TRAILER (REAR)

ITEM NO.	INTERVAL B	D	A	ITEM TO BE INSPECTED PROCEDURE	Equipment Is Not Ready/Available If:
20	•	•		**MOLDER DRIVE CHAIN**. Check for worn, damaged, or defective chain.	Inoperative
21	•	•		**MOLDER CONVEYOR BELT DRIVE CHAIN.** Check for worn, damaged, or defective chain.	Inoperative
22	•		•	**DIVIDER ROLLER CHAINS.** Check for worn, damaged, or defective chains.	Inoperative
23	•			**DIVIDER GEAR REDUCTION UNIT**. Add oil as indicated by level gage. Reference current L.O. Check for leaks.	Inoperative
24	•			**MIXER GEAR REDUCTION UNIT**. Add oil as indicated by level gage. Reference current L.O. Check for leaks.	Inoperative
25	•			**SERVICE AND BLACKOUT LIGHTS**. **(TRAILERS).** Check for burned-out lamps.	

2-7. PMCS TABLE - Continued

ITEM NO.	INTERVAL B	D	A	ITEM TO BE INSPECTED PROCEDURE	Equipment Is Not Ready/Available If:
26		•		CONTROLS AND INSTRUMENTS. Inspect for damage and loose mounting. With unit operating, check for proper operation. Normal operating readings for instruments are as follows: a. Mixer bowl dial thermometer — Indicates in degrees fahrenheit, the temperature of the dough being mixed. b. Water tempering tank measuring gage — Indicates in pounds, the amount of water in tank. c. Water tempering tank thermometer — Indicates in degrees fahrenheit the temperature of the ingredient water.	

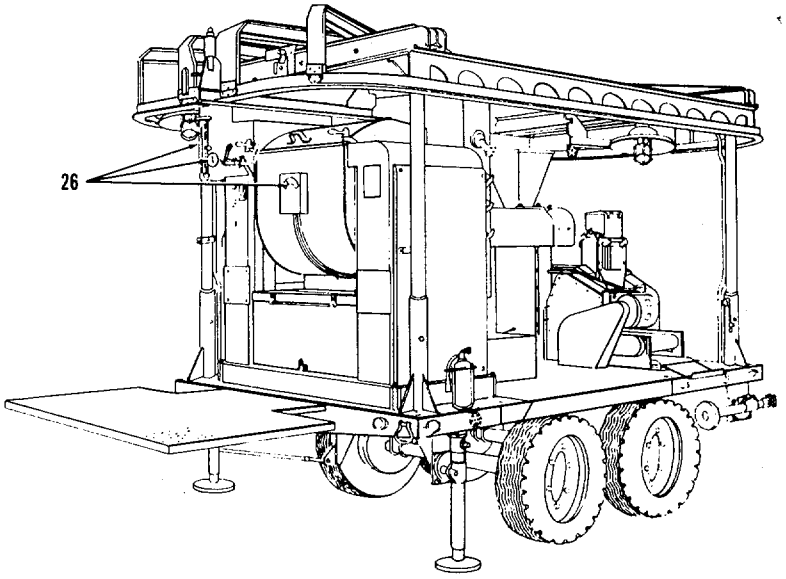

MIXING AND MAKEUP OUTFIT TRAILER (REAR)

2-7. PMCS TABLE. Continued

ITEM NO.	INTERVAL B	D	A	ITEM TO BE INSPECTED PROCEDURE	Equipment Is Not Ready/Available If:
27		•		**OVEN INDICATOR LIGHTS**. Check for burned out lamps.	
28	•			**OVEN CONVEYOR ROLLER CHAINS.** Check for worn, damaged, or defective chains.	
29			•	**PILLOW BLOCK**. Add oil as indicated by level gage. Reference current L.O. Check for leaks.	
30	•	•		**OVEN BLOWER** V-BELT. Check for worn, frayed, or cracked belt.	Broken

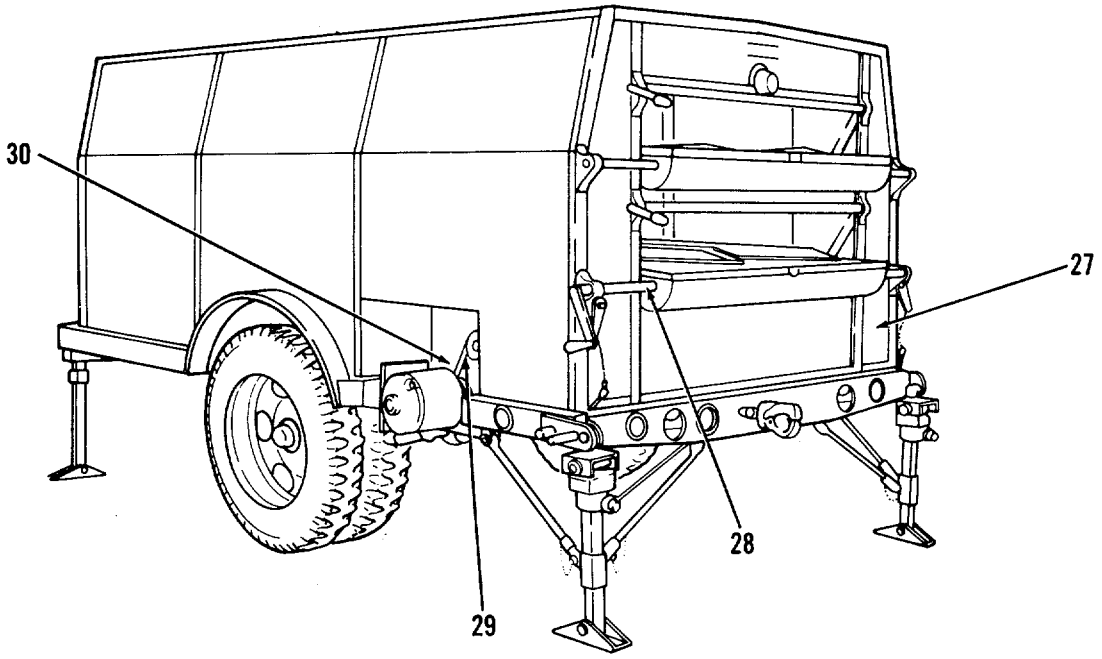

OVEN TRAILER

2-7. PMCS TABLE - Continued

ITEM NO.	INTERVAL B	D	A	ITEM TO BE INSPECTED PROCEDURE	Equipment Is Not Ready/Available If:
31	•			**OVEN LIGHTS**. Check for burned-out lamps.	Too low
32	•			**FUEL TANK.** Add fuel as required.	
33			•	**FUEL SCREEN**. Clean screen.	
34			•	**STOVE PIPE**. Clean stove pipe. Check for damaged or defective pipe.	
35	•		•	**PRESSURE RELIEF SHEETS AND GASKETS**. Check for improperly fit, worn, damaged or defective sheets and gaskets.	
36				**COMBUSTION TUNNEL**. Clean soot from tunnel.	
37	•			**FUEL FILTER.** Tighten shell bolts if gasket is leaking. (Clean weekly.)	
38	•			**FUEL METERING FLOAT VALVE**. Clean strainer. (Weekly)	Inoperative.

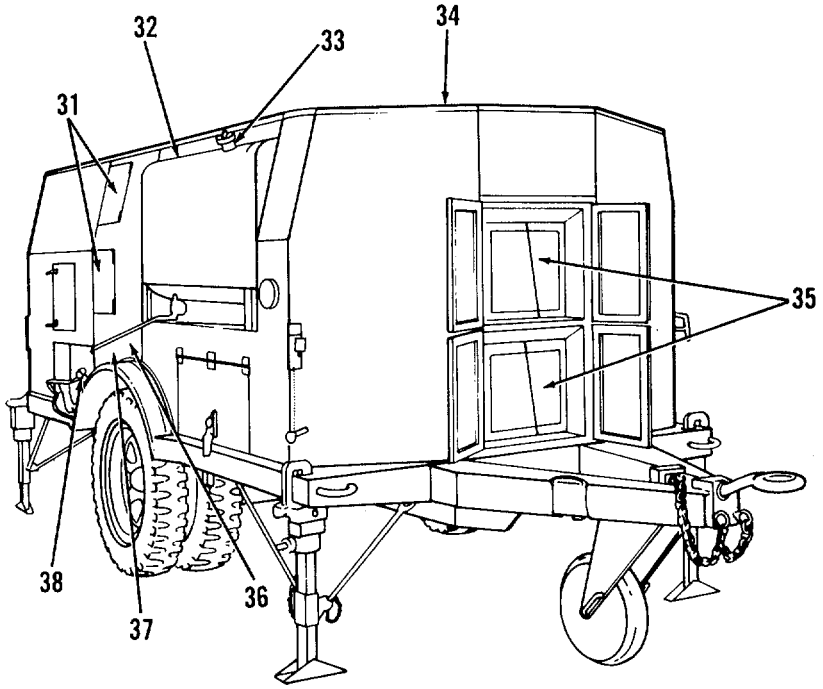

OVEN TRAILER

2-7. PMCS TABLE - Continued

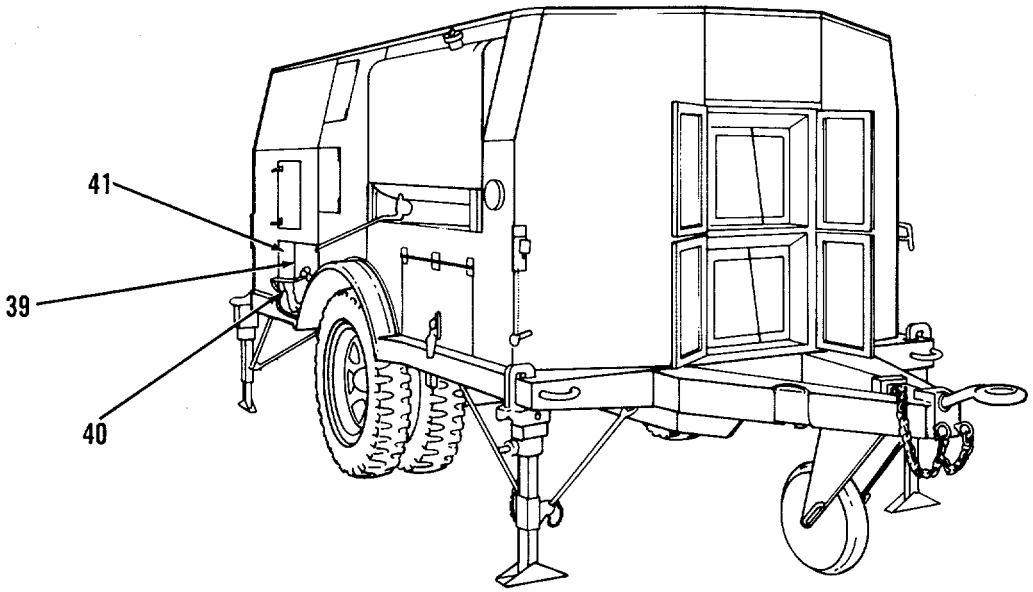

OVEN TRAILER

ITEM NO.	INTERVAL B	D	A	ITEM TO BE INSPECTED PROCEDURE	Equipment Is Not Ready/Available If:
39	•			**HEATER ASSEMBLY** GASKETS. Check for loose mounting. Check for worn, damaged or defective gaskets.	
40			•	**VALVES. (BY-PASS PLUG, FUEL SHUT-OFF, MAGNETIC).** Check for leaks.	
41			•	**BURNER ASSEMBLY**. Clean burner assembly Check for loose mounting and connections	Inoperative.

2-7. PMCS TABLE. Continued

ITEM NO.	INTERVAL B	D	A	ITEM TO BE INSPECTED PROCEDURE	Equipment Is Not Ready/Available If:
		•		**CONTROLS AND** INSTRUMENTS. Inspect for damage or loose mounting. Check for proper operation. Readings for instruments are as follows: a. Oven dial thermometer — 1000F (37.80C) less than the flue temperature registered on the temperature indicating control. b. Temperature indicating control — Indicates flue temperature.	

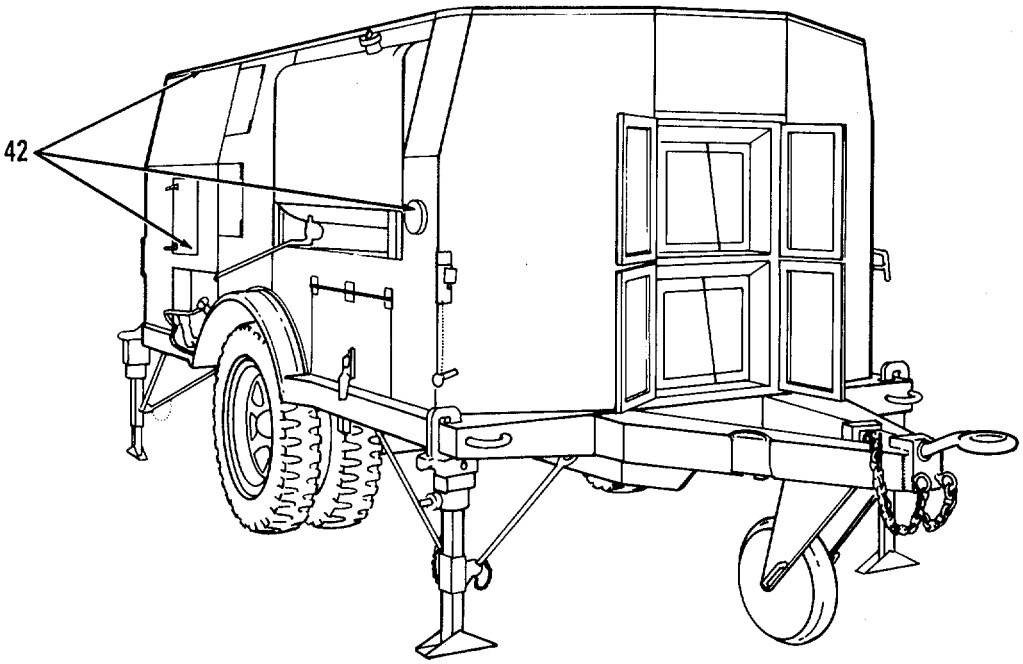

OVEN TRAILER

2-7. PMCS TABLE- Continued

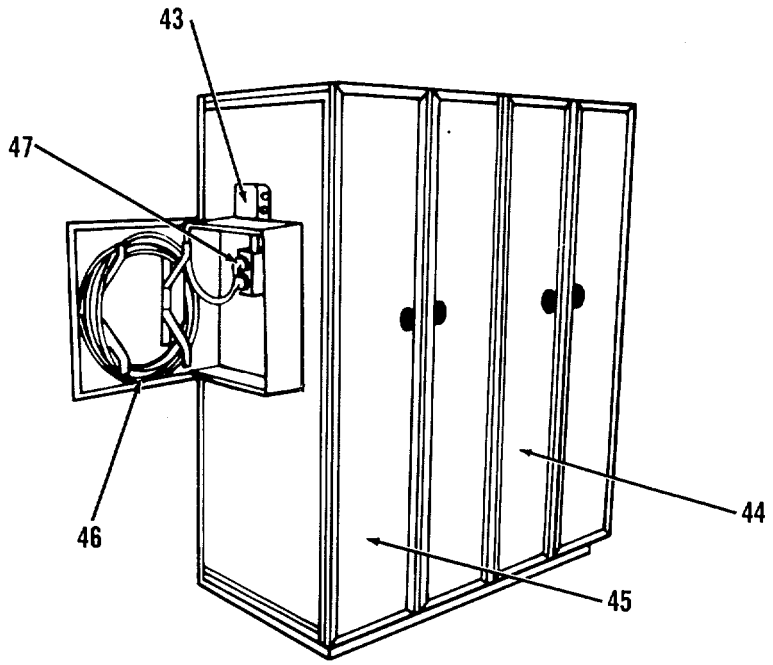

PROOFING CABINET

ITEM NO.	INTERVAL B	D	A	ITEM TO BE INSPECTED PROCEDURE	Equipment Is Not Ready/Available If:
43	•			**INDICATOR** LIGHT. Check for burned-out lamp and loose mounting and connections.	Inoperative
44			•	**HEATERS.** Clean corroded heaters and terminals.	
45	•			**WATER PANS.** Clean corroded pans. Check for damaged or defective pans.	
46	•			**INPUT CABLE**. Check for loose electrical connections and worn, damaged, or defective cable.	Inoperative
47	•	•		**CONTROL (PROOFING** CABINET THERMOSTATIC SWITCH). Inspect for damage and loose mounting. With the unit operating, check for proper operation.	Inoperative

2-7. PMCS TABLE - Continued

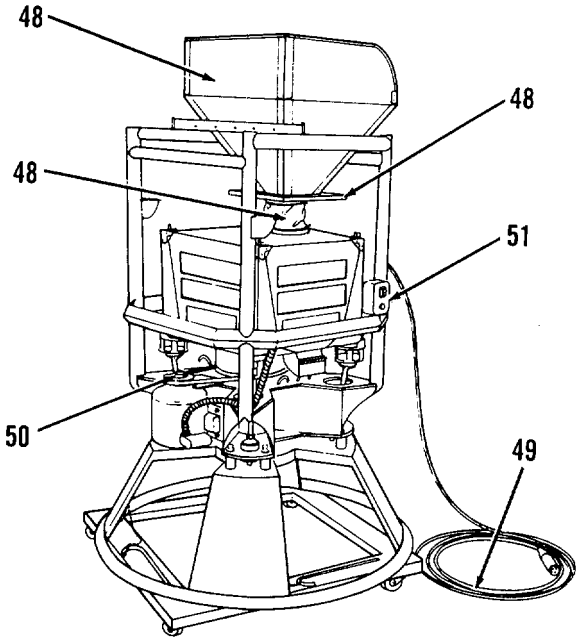

SIFTER

ITEM NO.	INTERVAL B	D	A	ITEM TO BE INSPECTED PROCEDURE	Equipment Is Not Ready/Available If:
48	•		•	**HOPPER, TUBE, AND SLIDE**. Clean hopper. Check for loose mounting and worn, damaged, or defective hopper, tube, or slide.	Unsanitary
49	•			**POWER CABLE**. Check for loose electrical connections and worn, damaged, or defective cable.	
50	•			**DRIVE V-BELT.** Check for worn, frayed, or cracked belt.	Broken
51	•	•		**CONTROL (SIFTER MANUAL STARTER).** Inspect for damage and loose mounting. With unit operating, check for proper operation.	
ALL		•		**OPERATION.** During operation of all items, observe for any unusual noise or vibration.	

2-7. PMCSTABLE-Continued

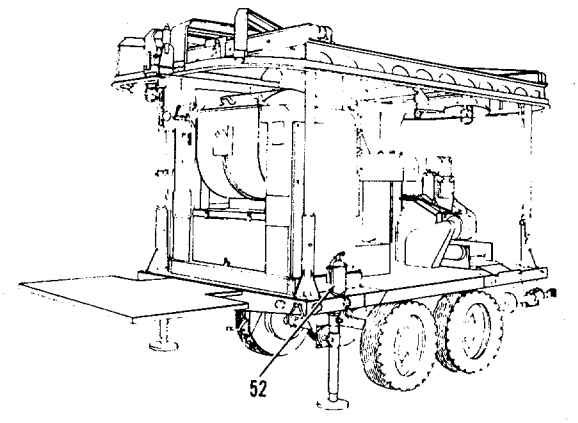

ITEM NO.	INTERVAL B	D	A	ITEM TO BE INSPECTED PROCEDURE	Equipment Is Not Ready/Available If:
	•			**FIRE EXTINGUISHERS**. Inspect for broken seal.	Missing or under-charged.

Section III. OPERATION UNDER USUAL CONDITIONS

2-8. ASSEMBLY AND PREPARATION FOR USE

a. Site Selection

After the equipment is towed to the site of operation, arrange the unit for easy and efficient operation:

(1) Place all units within cable distance 50 feet (127 centimeters) from power source. Do not splice or put extensions on any cables.

(2) Place the mixing and makeup trailer and the generator in any favorable location. Place generator in as dry a spot as possible. If necessary to locate the generator on soft ground, arrange a foundation of planks or logs for the unit.

(3) Locate the flour sifter and ingredient storage area on one side of the mixing and makeup machinery trailer and place the proofing cabinets on the opposite side.

(4) Locate the oven trailers next to the proofing cabinets and place the bread storage area next to the oven trailers.

2-8. ASSSEMBLY AND PREPARATION FOR USE-- Continued

b. Setting up equipment.

(1) Mixing and Makeup Outfit Trailer. When a location is selected for the trailer, proceed as follows:

(a) Lower front caster wheel (1) and lock wheel in position.

(b) Uncouple trailer from towing vehicle.

(c) Let down the retracted four corner jacks (2) and adjust jacks until trailer is level.

(d) Release and lower workplatform (3).

(e) Open the monorail (4) and attach the five dough trough carriers (5) and five dough troughs (6).

(f) Close and lock the monorail end sections.

(g) Remove canvas covers from equipment.

(h) Connect hoses to hot and cold water inlets (7) and to water-measuring tank over- flow pipe (8).

(2) Oven Trailer. When a location is selected for the oven trailer, proceed as follows:

(a) Let down the four leveling jacks (1) and uncouple trailer from towing vehicle.

(b) Adjust leveling jacks until the oven is level.

(c) Remove canvas cover from equipment.

(d) Remove covers from burner recess (2) and oven stack opening (3).

(e) Open access doors to the pressure relief sheets (4).

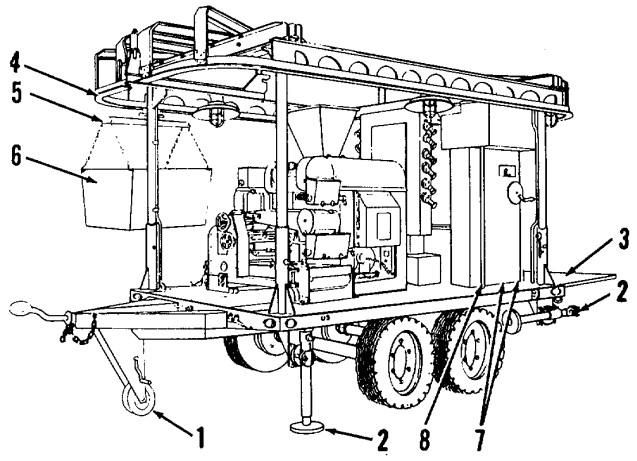

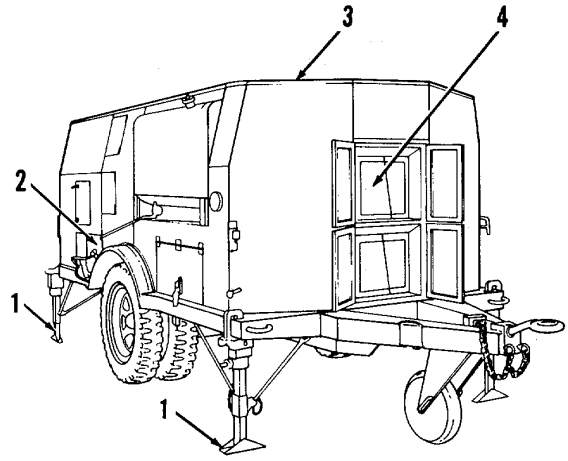

OVEN TRAILER

2-8. ASSSEMBLY AND PREPARATION FOR USE-- Continued

(f) Remove stovepipe sections from storage compartment and attach sections to oven stack opening (3).

(g) Check burner recess (2) and either siphon or wipe out any water or foreign matter present in the combustion tunnel (5).

(h) Loosen wingnuts that secure heat tube brush, and remove heat tube brush from storage compartment.

(i) Unfasten webbing strap that secures burner to storage compartment, and remove burner from storage compartment.

(j) Place burner pivot pins in pivots on trailer and swing burner into position. Lock burner and cover (6) in position with burner handle (7).

(k) Connect burner fuel line to tank fuel line.

(l) Insert magnetic valve cable plug into receptacle (8) in burner compartment.

(m) Connect fuel metering valve overflow hose.

(n) Remove cover from burner pulley (9) in blower motor recess.

(o) Insert plug on blower motor cable (17) into receptacle (10) in burner recess (2).

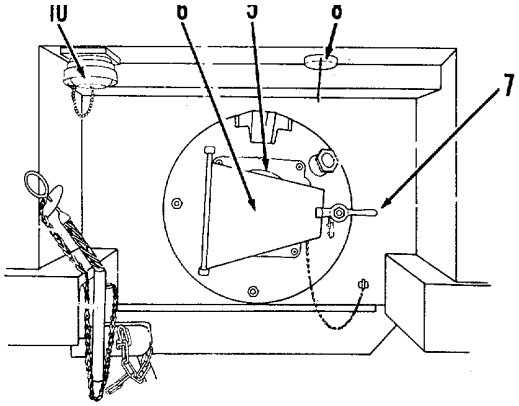

BURNER RECESS

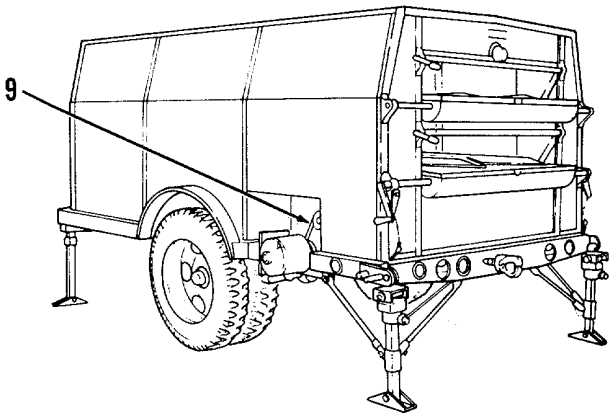

OVEN TRAILER

2-8. ASSSEMBLY AND PREPARATION FOR USE-- Continued

(p) Loosen wingnuts (11) on clamp that secures blower motor to storage compartment, and slide blower motor out of compartment.

(q) Slide blower motor(12) and mounting plate on motor pivot shaft of oven.

(r) Insert head of bolt (13) on blower motor takeup arm into mounting bracket slot.

(s) Place V-belt (14) on motor pulley and blower shaft pulley.

(t) Tighten wingnut on bolt on takeup arm (15). (u) Check oil level (16).

(3) Proofing cabinet.

(a) Before locating the proofing cabinet, wash inside and outside of cabinet with soap and warm water. Rinse thoroughly and dry cabinet with clean cloths.

(b) Set the cabinet in the desired location and be sure cabinet is level.

(c) Clean the four water pans and place them on the heater racks (1).

(d) Uncoil power input cable (2).

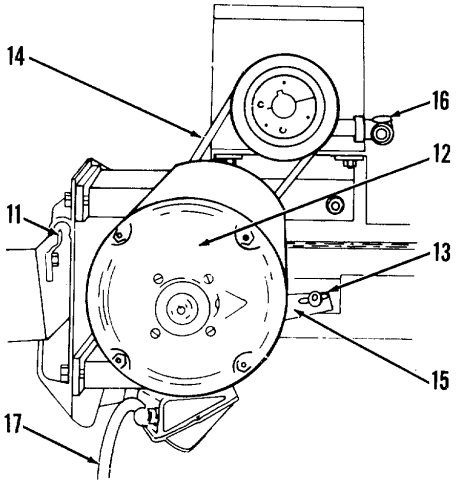

BLOWER MOTOR RECESS

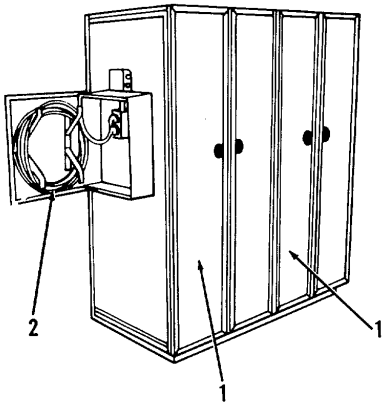

PROOF CABINET

2-8. ASSEMBLY AND PREPARATION FOR USE-Continued

(4) Flour Sifter. When a location is selected for the sifter, proceed as follows:

(a) Be sure sifter is level.

(b) Remove inverted feed hop- per (1) from hold down box (2); tilt hopper slightly so hopper fastening bar (3) clears frame.

(c) Turn feed hopper upright and set it in place, fitting fastening bar lock rods into holes provided on frame. Fasten hopper bolts (4).

(d) Install cloth tube (5) between hopper (1) and hold down box (2), and fasten tube with two clamps.

(e) Remove eight thumbs- crews (6) holding inverted sifter base (8) to machine bed.

(f) Raise sifter machine bed (7), and turn base over; lower machine bed into position on base (8). Secure with eight thumbscrews (6).

(g) Use four stowed hook-type stakes (9) to anchor sifter to ground.

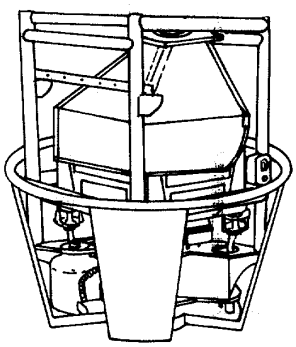

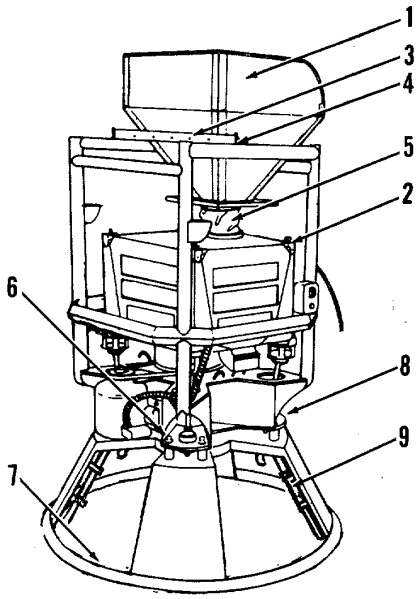

WARNING

Do not operate the generator set in an enclosed area unless the exhaust gases are piped to the outside. Inhalation of exhaust fumes will result in serious illness or death.

(5) Generator. When a location is selected for the generator, proceed as follows:
(a) Be sure generator set is level.
(b) If generator is located indoors, be sure to pipe the exhaust gas to the outside, keep room well ventilated, and place generator where it receives a maximum of air. There must be at least 2 feet of space on all sides of unit.

2-9. OPERATING PROCEDURE

WARNING

The generator set must be grounded prior to operation. The ground may be any of three methods, depending on the location and the terrain; (1) a ground rod driven to a depth of 8 feet, (2) an underground metallic water piping system or (3) a metal plate (9 sq. ft) buried at a depth of 4 feet.

The ground lead must be No. 6 AWG copper wire bolted or clamped to the rod, plate, or piping system. Connect the other end of the ground lead to the generator set ground stud.

a. Electrical Connections.

(1) Generator. Be sure generator main switch is in OFF position and that set is connected for the correct power distribution. Extend a cable from the generator set power receptacle to the mixing and makeup outfit trailer.

(2) Mixing and makeup outfit trailer.

(a) Differences in models. Refer to paragraph 1-7.

(b) Central control panel. When using models equipped with a central control panel, make power connections from the oven trailers, proofing cabinets, flour sifters, and all over- head lights to the central control panel. The connection for the mixing and makeup trailer power source is located beneath the central control panel.

(c) Power control panel. On models equipped with two control panels make power connections from the oven trailers to the mixing and makeup trailer power control panel.

(d) Light control panel. On models equipped with two control panels, make power connec- tions from the proofing cabinets, flour sifter, and all overhead lights to the mixing and makeup trailer light control panel. The connection for the mixing and makeup trailer power source is located beneath the light control panel.

b. Generator Set. Make electrical connections (para. 2-9. a.) and proceed as follows:

(1) Perform the before-operation (b) services listed in TM5-6115-365-15 and TM5-6115-465-12. for the generator set.

(2) Press starter switch. If engine does not start, release switch and wait at least 2 minutes before pressing starter switch again. Release starter switch as soon as engine starts.

(3) Allow engine to warm up for several minutes and set speed control for desired speed.

(4) Adjust controls for proper voltage and frequency and press the main switch ON.

2-9. OPERATING PROCEDURE - Continued

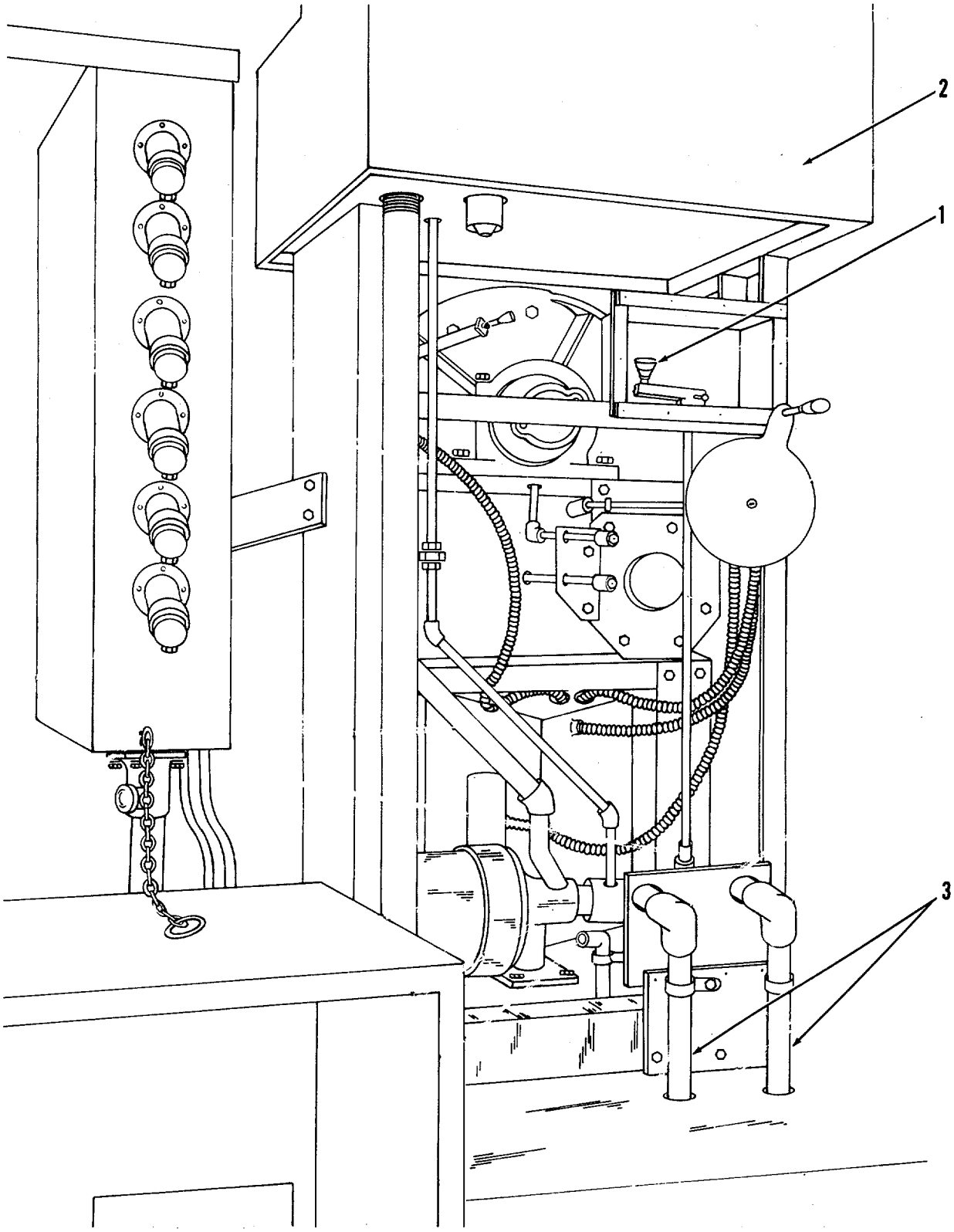

WATER-TRANSFER SYSTEM

29. OPERATING PROCEDURE - Continued

c. Mixing and Makeup Machinery. Make electrical connections (para. 2-9. a.) perform before-operation services (para. 2-7), and proceed as follows:

(1) Water-transfer system.

(a) With control valve handle knob (1) in CLOSED position, place approximately 3 gallons (11.4 liters) of water in water-tempering tank (2).

(b) Turn control valve handle to OPEN position. Open check valves at intake ends of hoses (3) until water flows from the hoses free of entrapped air.

(c) Keep hoses as straight and level as possible when filling with water.

(d) Insert intake end of one hose into hot water supply can and insert intake end of other hose into cold water supply can.

(e) Turn on water-transfer pump motor switch.

(f) Adjust control valve handle knob (1) to bring in hot and cold water in the necessary quantities to obtain desired water temperature.

(g) When sufficient water of desired temperature is obtained, shut off water-transfer pump motor switch and turn control valve handle knob (1) to CLOSED Position.

29. OPERATING PROCEDURE - Continued

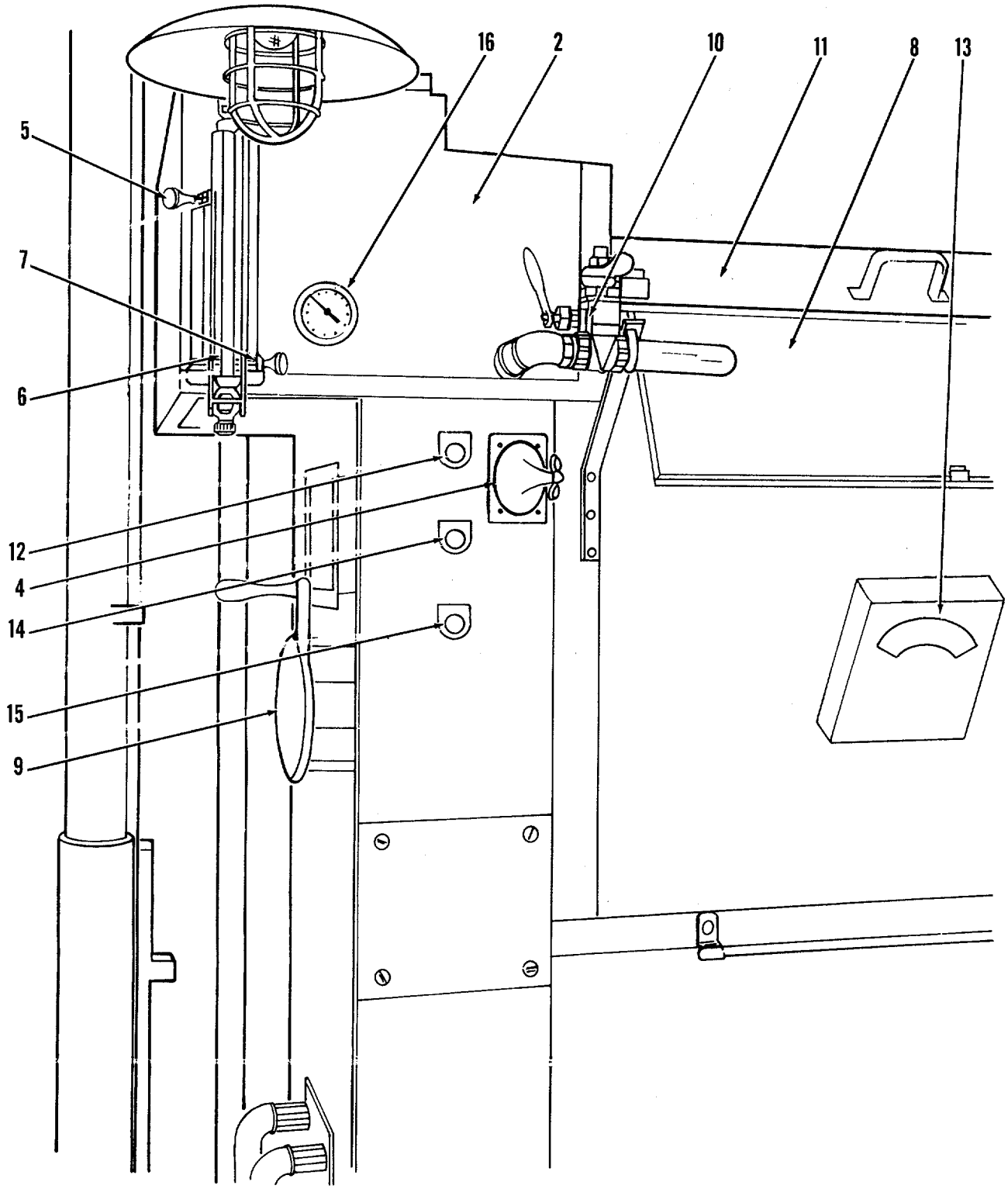

WATER MEASURE TANK AND MIXER

29. OPERATING PROCEDURE - Continued

(2) Water-measuring tank.

(a) Operate the water-transfer system to fill the water-tempering tank (2) with ingredient water of desired temperature for dough mix. Check water-tempering tank dial thermometer (16) for correct temperature.

(b) Set left pointer (5) of measuring gage (6) even with water level in glass tube.

(c) Set right pointer (7) of measuring gage to indicate the desired poundage of water required for dough mix.

(d) Tilt mixer bowl (8) forward by means of dump handwheel (9).

(e) Open outlet gage valve (10) and allow water to run into mixer bowl until level on gage reaches lower, or right, pointer (7).

(f) Close outlet gate valve (10) and return bowl to upright position.

(3) Mixer.

(a) Unlatch and raise bowl cover (11).

(b) Tilt mixer bowl (8) forward by turning dump handwheel (9) clockwise.

(c) Place ingredients in bowl in proper quantities and in correct order.

(d) Return bowl to upright position and close and latch cover(11).

(e) Start mixer by pressing start pushbutton (12). Allow mixer to operate for specified time, checking temperature of dough mix by means of thermometer (13) mounted on front of mixer bowl.

(f) Stop mixer by pressing stop pushbutton (14).

(g) Close hinged end section of monorail directly over mixer and move a dough trough into position. Remove dough trough cover.

(h) Raise bowl cover and tilt mixer bowl forward until lip of bowl extends over dough trough.

CAUTION

One and only one operator must operate jog pushbutton after he has pressed start pushbutton. Both operator hands are required to operate the pushbuttons as a safety precaution. Serious injury may result if pushbuttons are not operated by same person.

(i) Hold start pushbutton (12) down with left hand and press jog pushbutton (15) with right hand. The action of the agitator usually empties the dough into the trough. If necessary, stop agitator and then jog. Use a dough scraper to remove dough sticking to bowl and agitator after mixer is stopped.

(j) Clean bowl immediately and apply a coat of divider oil.

(k) Return mixer to upright position and be sure cover (11) is closed and latched.

29. OPERATING PROCEDURE - Continued

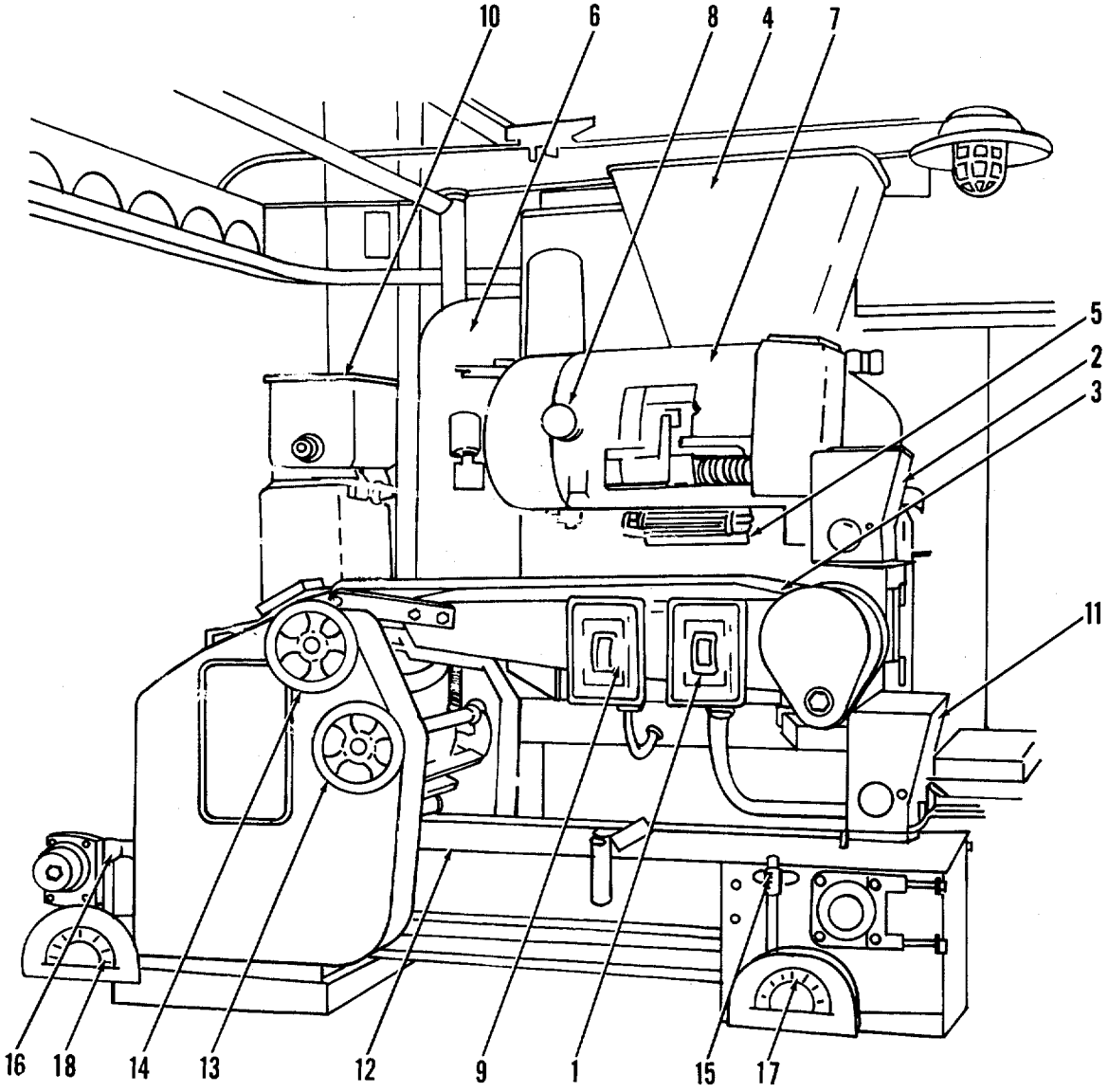

DIVIDER AND MOLDER

29. OPERATING PROCEDURE - Continued

(4) Divider. Start the molder and divider at the same time. Running the divider without operating the molder causes dough pieces to pile up at the head of the molder.

(a) Start divider by pushing magnetic starter (1) to ON position.

(b) Set upper divider flour duster (2) in operation and adjust per para. 2-9. C. (6) below for proper dusting of divider conveyor belt (3).

(c) Remove dough from dough trough and place dough in divider hopper (4).

(d) Adjust drop off gage (5) to guide dough pieces into center of divider conveyor belt (3).

(e) Check weight of each dough piece with scale (6) as each piece drops from divider pocket in dough box cylinder (7). Control weight with cylinder screw knob (8) by turning clockwise to decrease and counterclockwise to increase dough piece size. Adjust until divider is measuring and cutting off uniform dough pieces of correct weight. Spot check remaining dough pieces and make further adjustment as necessary.

(f) When dough is divided, push magnetic starter (1) to OFF position.

(5) Molder.

(a) Start molder by pushing magnetic starter (9) to ON position.

(b) Set sheeting roll flour duster (10 in operation.

(c) Set lower divider flour duster (11)in operation and adjust per para. 2-9. C. (6).

(d) Adjust molder sheeting rolls for proper flattening of dough pieces by controlling space between lower rollers with wheel (13) and upper rollers with wheel (14) to increase dough piece size by turning clockwise and turning counterclockwise to decrease dough piece size. Adjust wheels together for proper operation of molder.

(e) Adjust end dough guide to properly steer dough piece around conveyor pulley onto pressure board.

(f) Adjust pressure board with control knobs (15) (right hand) and (16) (left hand) to regulate length of loaf issued from molder. Use pressure board dials (17) (right hand) and (18) (left hand) for indication of loaf length issued. As dial pointer moves right, loaf length increases; as pointer moves left, loaf length decreases. Adjust side dough guides to form a properly formed loaf.

(g) Check molded dough pieces and throw back into divider hopper (4) any defective pieces.

(h) When dough is molded, stop molder by pushing magnetic starter (9) to OFF position.

29. OPERATING PROCEDURE - Continued

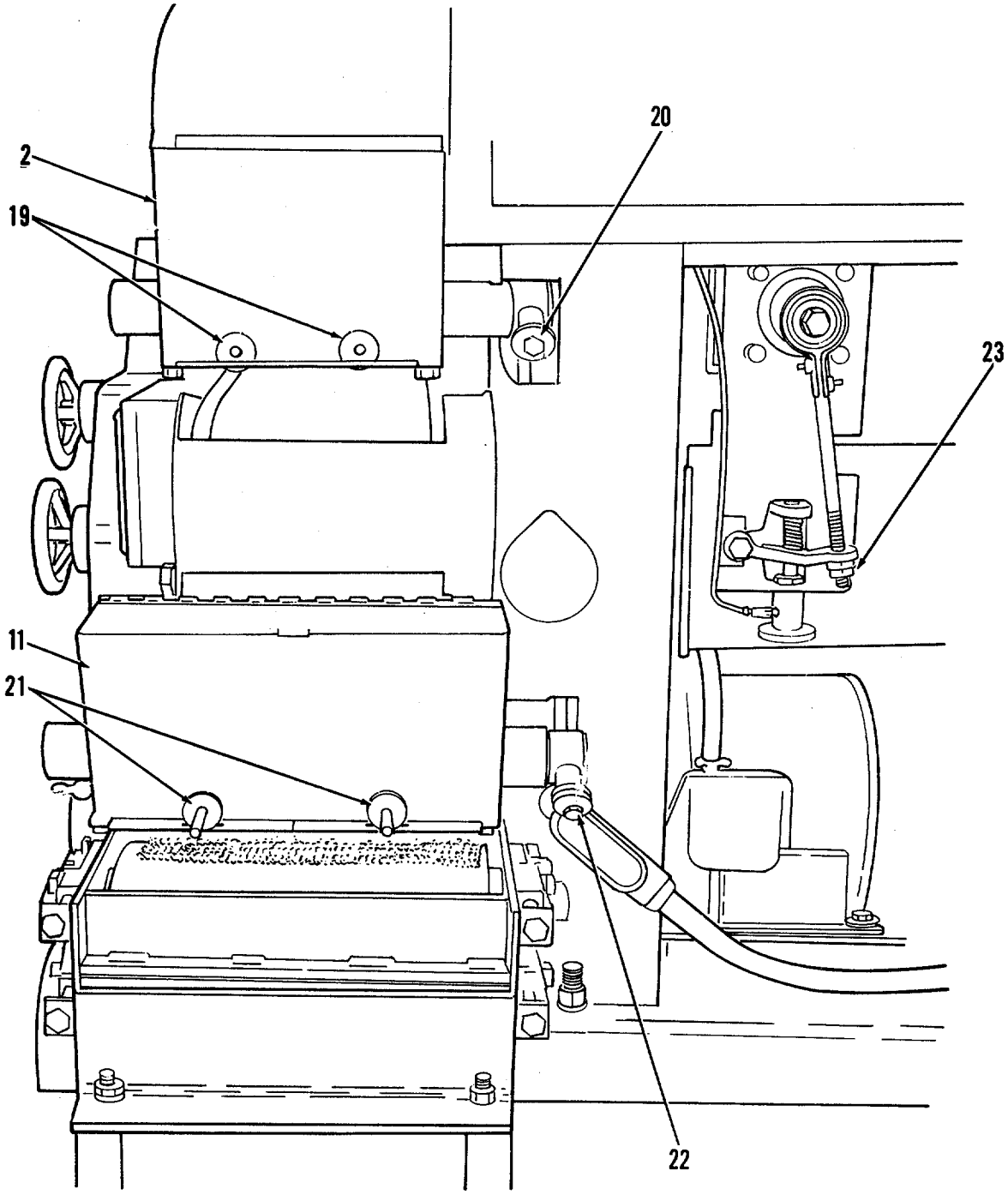

DIVIDER DUSTERS

2-9. OPERATING PROCEDURE - Continued

(6) Divider dusters.

(a) Regulate operation of upper duster (2) by turning knobs (19) counterclockwise to increase flour amount released and clockwise to decrease amount released. Left knob controls left side and right knob controls right side. Adjust to provide amount desired to prevent sticking evenly on each side. Stop duster operation by pulling out knob (20) and twisting to secure knob in out position. Normally more flour will be deposited in the center than at the edges of the belt.

(b) Regulate operation of lower duster (11) by turning knobs (21) similar to (19) and knob (22) similar to (20) in para. (a) above.

(c) Regulate amount of oil pumped to dough contact parts of molder by turning nut (23) up to increase oil flow and down to decrease oil flow as desired to prevent sticking of dough.

2-9. OPERATING PROCEDURE - Continued

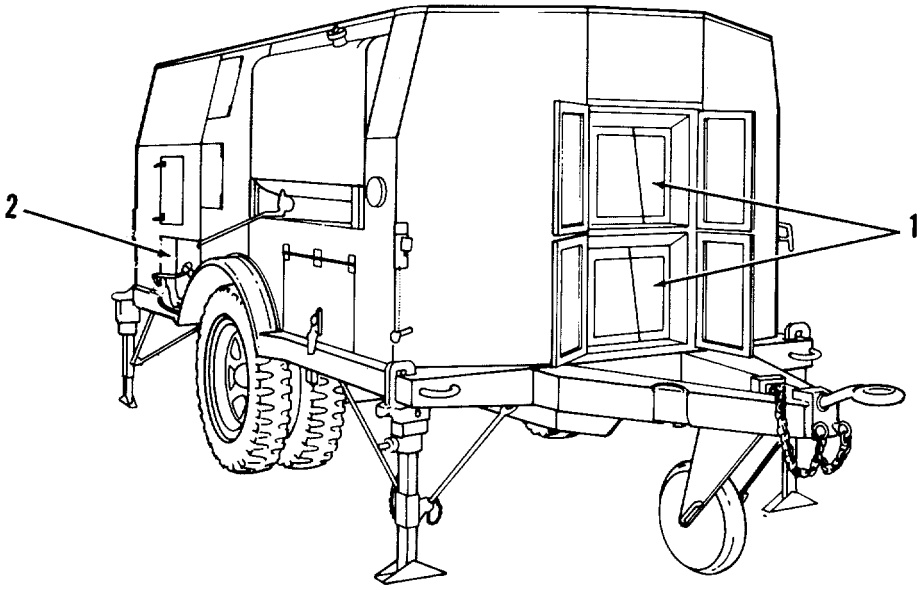

OVEN TRAILER

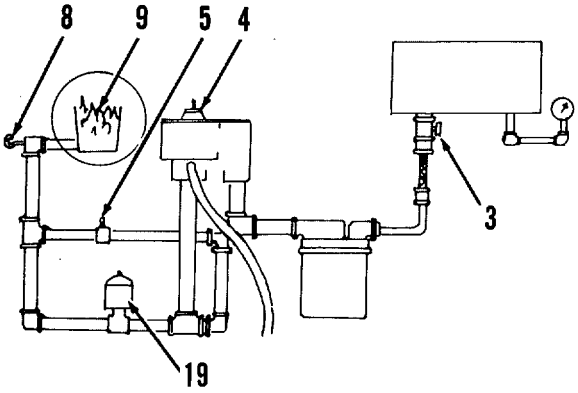

OVEN BURNER ASSEMBLY

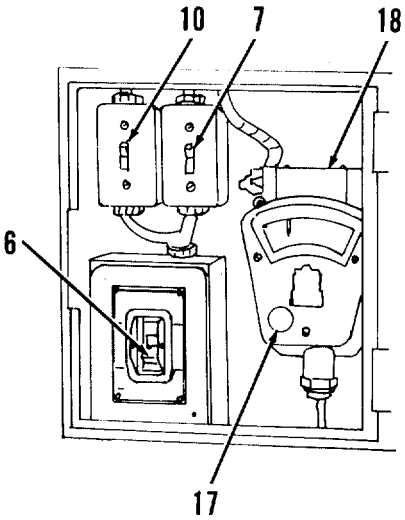

OVEN CONTROL PANEL

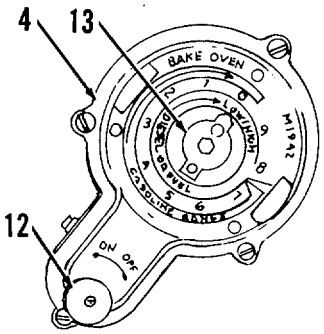

FUEL METERING

2-9. OPERATING PROCEDURE - Continued

WARNING

Preventilate oven heating system by running the blower 2 or 3 minutes to clear out gas fumes.

d. Oven. Make electrical connections (para. 2-9. a.) and proceed as follows:

WARNING

During operation of the oven trailer, the access doors to the pressure relief sheets must be in the open position.

(1) Perform before-operation services (para. 2-7).

(2) Open access doors to pressure relief sheets (1).

(3) Swing and lock burner (2) in OPEN position.

(4) Make certain fuel tank shutoff gate valve (3), fuel metering float valve (4), and bypass valve (5) are closed on oven Burner Assembly.

(5) On Oven Control Panel push oven motor manual starter (6) to ON position and make certain blower (26) rotates counterclockwise. For model M533 bakery oven, press start button to energize oven blower motor. Push oven light toggle switch (7) to ON position.

(6) Preventilate oven heating system by running the blower for 2 or 3 minutes.

(7) Turn clean out rod (8) back and forth while pushing it in and out to clean fuel passage to vaporizing cup (9). When finished, be sure to leave clean out rod in OUT position.

(8) Push oven burner toggle switch (10) to ON position.

(9) Remove lighting hole plug.

(10) Open fuel tank shutoff gate valve (3).

(11) Ignite lighting torch (11) in Burner Recess and place it into lighting hole of burner, inserting it well down into vaporizing cup (7).

(12) Turn stop screw knob (12) of float valve (4) counterclockwise to ON position.

(13) Set adjusting screw (13) of float valve to position 3.

(14) When burner is lighted, remove torch, reinsert torch into holder(14) and quickly replace lighting hole plug.

(15) Swing burner slowly into CLOSED position and lock with burner handle (15).

2-9. OPERATING PROCEDURE - Continued

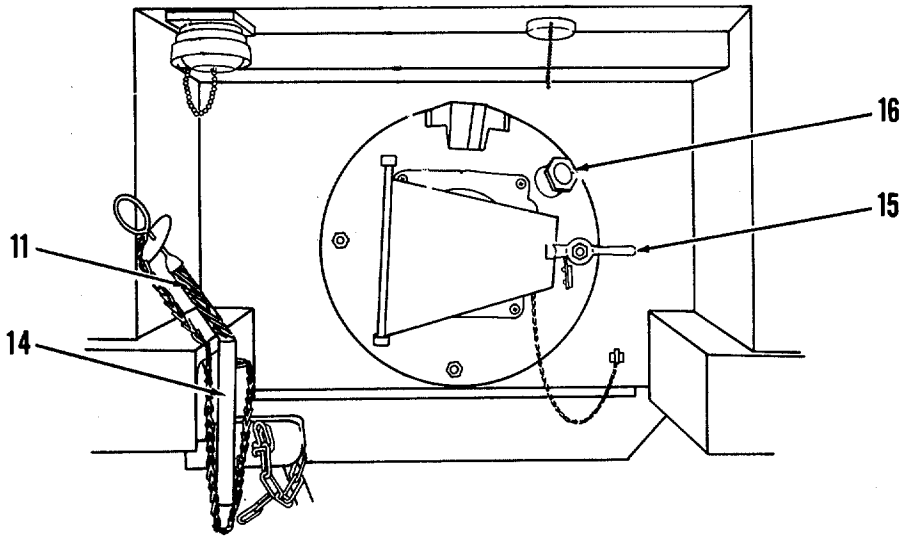

BURNER RECESS

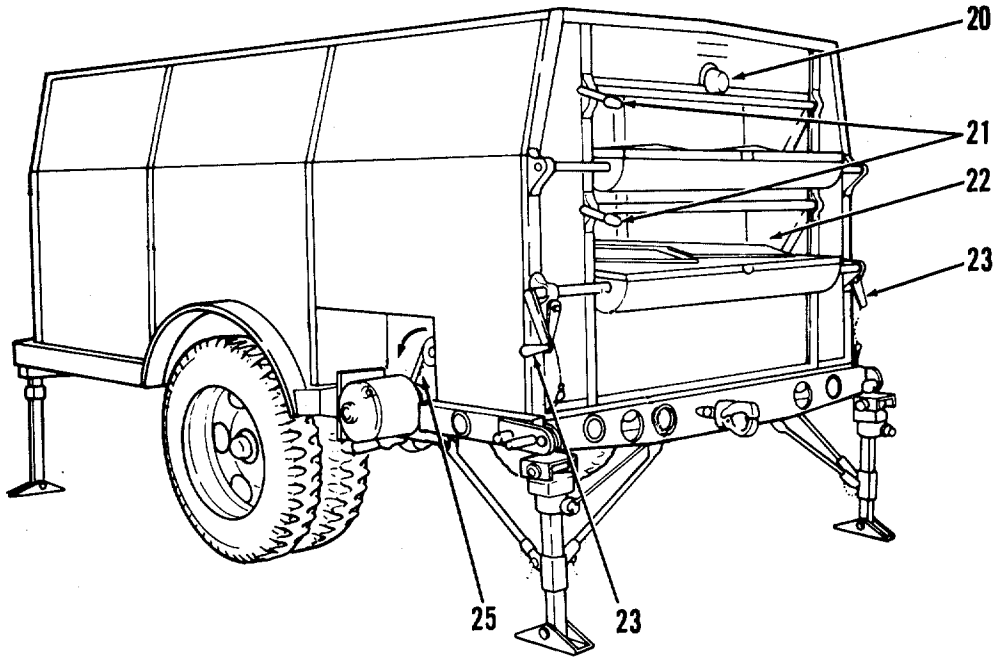

OVEN TRAILER

2-9. OPERATING PROCEDURE - Continued

(16) After burner has been in operation for 2 or 3 minutes set adjusting screw (13) of float valve to position 7 1/2 or8. This valve regulates the rate at which the burner operates and it should be set so that the burner is on high flame about 80 percent of the time with full baking load.

(17) Keep minimum or pilot flame as large as possible without building up oven temperature on low setting. Observe flame in combustion chamber thru sight gage (16).

(18) For initial operation, set pointer adjusting knob (17) of temperature control (18) at 560°F (293.3 °C), which is the flue temperature usually required to maintain a uniform 450°F (232.2°C) temperature throughout the baking chambers. Normally flue temperature will read approximately 100°F (37.8°C) higher than oven temperature.

(19) If the magnetic valve (19) fails to function, control the oven temperature by means of the emergency bypass valve (5). When operating the oven by means of the bypass valve, keep constant watch to see that the oven temperature does not go beyond the proper baking temperature.

(20) Run oven until temperature on thermometer (20) indicates a minimum of 450°F (232.2°C). It may require approximately 45 minutes to reach this temperature.

(21) Open bottom oven door with oven door handles (21) and engage catch to hold door open while loading bread.

(22) Place panned bread in oven, loading bottom rack (22) first and turning conveyor drive shaft cranks (23) to carry bread into oven. Close oven door immediately and secure with locking knob (24).

(23) After baking, remove bread by reversing loading procedure, unloading top deck first.

2-9. OPERATING PROCEDURE - Continued

e. Proofing Cabinet. Make electrical connections (para. 2-9. a.) and proceed as follows:

(1) Perform before-operation services (para. 2-7).

(2) Fill the four water pans (1) half full of water and set them back in the cabinet. Close cabinet doors and latch with knobs (2).

(3) Check indicator light (3) for power. Set the thermostatic (4) switch at 95°F (35°C).

(4) Operate the proofing cabinet until the desired temperature and humidity are reached. Cabinet should be operated about 30 minutes before proofing the loaves.

(5) Load the bread pans into the cabinet, starting with top rack (5) and filling one section at a time so only one door is open at a time. Keep doors closed as much as possible to prevent loss of heat and humidity.

(6) If two operators are loading the cabinet, one operator will carry the bread pans from the mixing and makeup outfit trailer and the other operator will open and close the cabinet doors.

(7) When the bread is proofed, unload the cabinet and place the loaves in the oven as soon as possible. Follow the same procedure in unloading as was followed in loading, being careful not to jar the loaves and keeping the doors closed as much as possible.

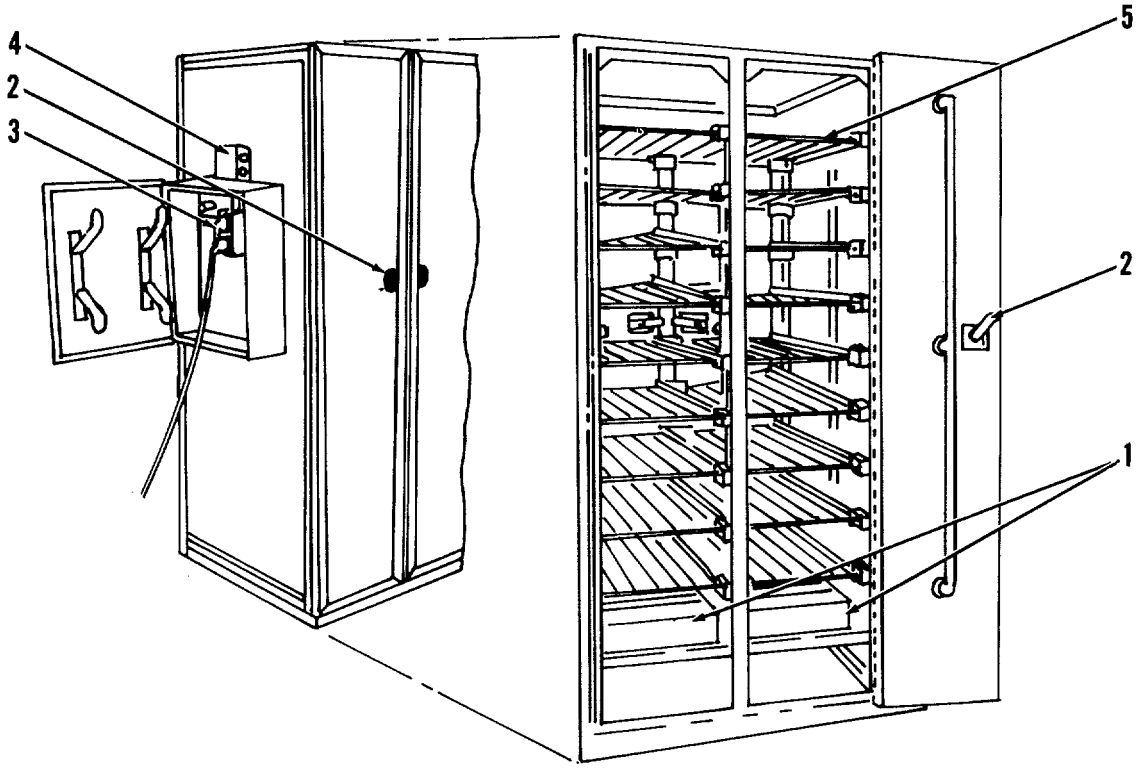

PROOFING CABINET

2-9. OPERATING PROCEDURE - Continued

f. Flour Sifter. Make electrical connection (para. 2-9. a.) and proceed as follows:

(1) Attach three empty sacks to the hooks and spurs (1). If 100-pound (45.4 kilograms) bags are used, rest them on the ground. If only 50-pound (22.7 kilograms) bags are available, support the bottoms of the bags with dunnage or pallets.

(2) Perform the before-operation services (para 2-7).

(3) Open the three hopper doors (2). If doors are closed, the sifter becomes unbalanced during operation and causes damage to parts.

(4) Turn manual starter switch (3) to ON position.

(5) Pull slide (4) outward to start flow of flour.

(6) When sacks are full, replace with empties.

(7) When all flour has been sifted, turn manual switch (3) to OFF position. See that all flour has been removed from sifter hopper (5) and sieve frames (6), and remove sacks.

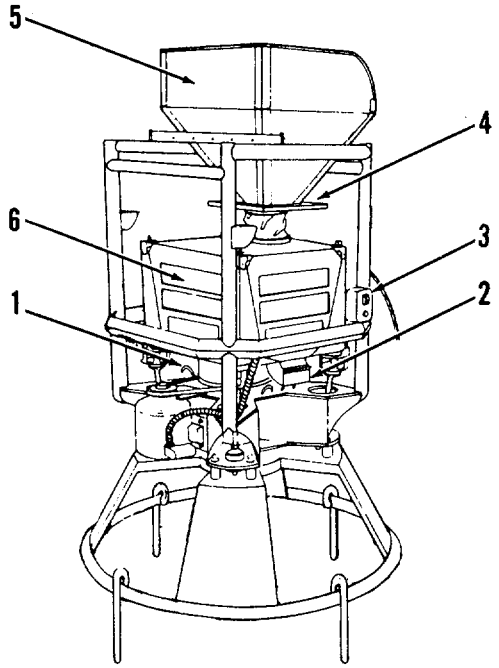

FLOUR SIFTER

2-10. SHUTTING DOWN EQUIPMENT

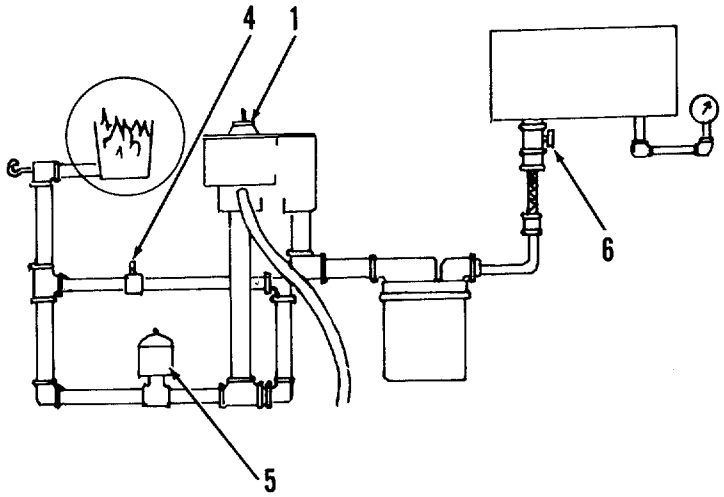

OVEN BURNER ASSEMBLY

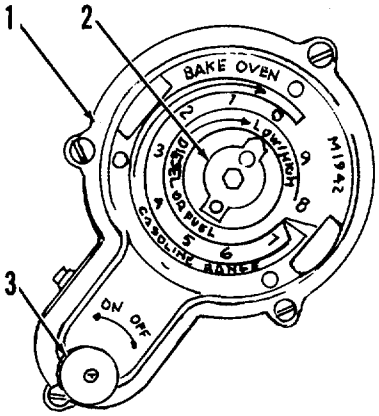

FUEL METERING
FLOAT VALVE

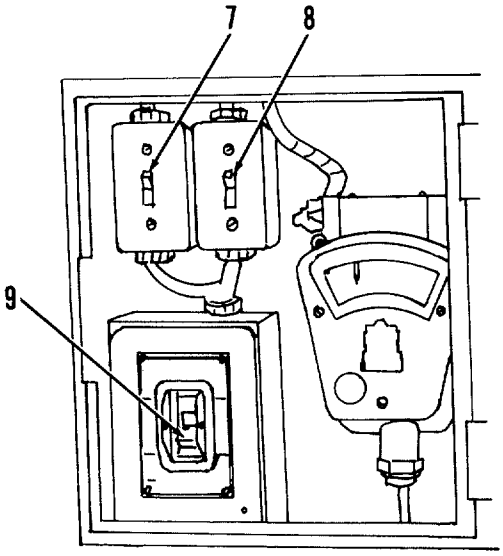

OVEN SHUTDOWN CONTROLS

2-10. SHUTTING DOWN EQUIPMENT - Continued

a. Mixing and Makeup Machinery.
   (1) Disconnect electrical connections (para. 2-9a).
   (2) Perform after-operation services (para. 2-7).

b. Oven.

WARNING

After oven burner is shut off let the blower run several minutes after burner stops firing to clear out gas fumes.

(1) Set fuel metering float valve adjusting screw (1) at position 0 and turn stop screw knob (3) clockwise to OFF position.

(2) Turn off bypass valve (4) if it has been used to bypass magnetic valve (5).

(3) Close fuel tank shutoff gate valve (6).

(4) Let blower run several minutes after burner stops firing to clear out gas fumes.

(5) Push oven burner toggle switch (7) to OFF position.

6) Push oven light toggle switch (8) to OFF position.

(7) Push oven motor manual starter switch (9) to OFF position. For model M533 bakery oven, press stop button to stop oven blower motor.

(8) Disconnect electrical connections (para. 2-9a).

(9) Perform after-operation services (para. 2-7).

c. Proofing Cabinet.

(1) Disconnect electrical connections (para. 2-9a).

(2) Perform after-operation services (para. 2-7).

d. Flour Sifter.

(1) Disconnect electrical connections (para 2-9a).

(2) Burn reject bag to destroy weevils sifted from flour.

(3) Perform after-operation services (para. 2-7).

e. Generator Set.

(1) Push in the main switch OFF.

(2) Allow engine to idle for a few minutes to cool it.

(3) Turn magneto switch to OFF position to stop engine.

(4) Be sure all switches are in OFF position.

(5) Disconnect electrical connections (para. 2-9a).

(6) Perform after-operation (a) services listed in TM5-6115-321-12 for the generator set.

Section IV. OPERATION UNDER UNUSUAL CONDITIONS

2-11. EXTREME COLD

a. When operating the bakery plant in a frigid zone, the equipment must be placed in a heated shelter.

b. To operate generator in extreme cold, consult the appropriate generator technical manual and be sure radiator is protected with antifreeze and that battery is fully charged.

c. At the end of daily operation, drain water-tempering tank and water-transfer system, and leave all water drain cocks and valves open.

d. Keep fuel tank as full as possible to prevent excessive moisture and ice from forming and clogging the fuel lines.

e. Wiring becomes brittle in extreme cold and should be warmed before bending it. Keep wiring dry.

2-12. EXTREME HEAT AND HUMIDITY

a. Oven Trailer. Check the blower motor frequently for overheating during hot or humid weather.

b. Proofing Cabinet. When the air temperature exceeds 95°F (35°C), cool the proofing cabinet before operating it. Fill the water pans with ice, close the cabinet doors, and allow the ice to melt, thus cooling the cabinet.

c. Flour Sifter. During periods of heat and excessive humidity, check the sifter motor frequently for overheating. Suspend operations when necessary to avoid damaging the motor.

2-13. EXCESSIVE WATER

a. Keep all equipment as dry as possible. During transit, keep equipment covers in place.

WARNING

Dry cleaning solvent P-D-680, used to clean parts, is potentially dangerous to personnel and property. Avoid repeated and prolonged skin contact. Do not use near open flame or excessive heat. Flash point of solvent is 100 degrees F to 138 degrees F (38 degrees C to 59 degrees C).

b. After rainstorms, wipe equipment with clean cloths.

c. Wipe all parts not in contact with dough or ingredients with a cloth moistened in P-D-680 (Solvent, drycleaning).

2.14. SANDY AND DUSTY CONDITIONS

a. When possible, shut down operation of the bakery plant during dust storms and use canvas covers to protect equipment.

b. Be especially careful to protect all parts of the equipment that contact dough and ingredients.

c. Take special care to protect the oven blower motor and fan shaft bearing.

d. Use clean cloths to wipe off dust and sand.

e. Where possible, erect a barrier or shield to protect the bakery equipment. Take full advantage of any natural barriers. However, be sure protective screens do not obstruct flow of normal amount of air to cooling system of generator.

f. Keep equipment free of excessive grease that collects sand and dust.

2.15. TROPICAL CONDITIONS

In tropical areas, the bakery equipment is especially liable to rust, fungus growth, and other injurious conditions. In addition to the precautions for excessive heat and humidity (para. 2-12), observe the following:

a. Each day, check for and remove any webs or cocoons left by insects on equipment, especially between electrical contact points.

b. Keep fuel tanks as full as possible. Temperature changes cause condensation and result in water getting into fuel lines.

c. Be sure adequate steps are taken to prevent rusting of equipment, including painting all stationary parts of the equipment.

d. Be sure steps are taken to protect equipment from fungus growth by spraying with a preventive substance.

CHAPTER 3

MAINTENANCE INSTRUCTIONS

Section I. Lubrication Instructions

Appendix A of this manual refers to the pertinent Lubrication Orders (LO) for the bakery plant.

Section II. Troubleshooting Procedures

Troubleshooting is the process of locating and correcting malfunctions that may occur under normal operating conditions and is the responsibility of the using organization. It is the responsibility of the operator to be alert to any signs of trouble and to report any deficiencies noted as soon as possible.

Section III. Maintenance Procedures

3-1. MIXER ASSEMBLY

a. General. Because dough hardens very quickly if left standing, the mixer bowl and agitator rollers should be cleaned immediately after the dough mix has been discharged.

b. Cleaning.

(1) With a dough scraper remove all excess dough from inside of mixing bowl and agitator arm.

(2) Raise the mixer bowl (1) to closed position; open lid (2) and wet top of mixer and mixer lid.

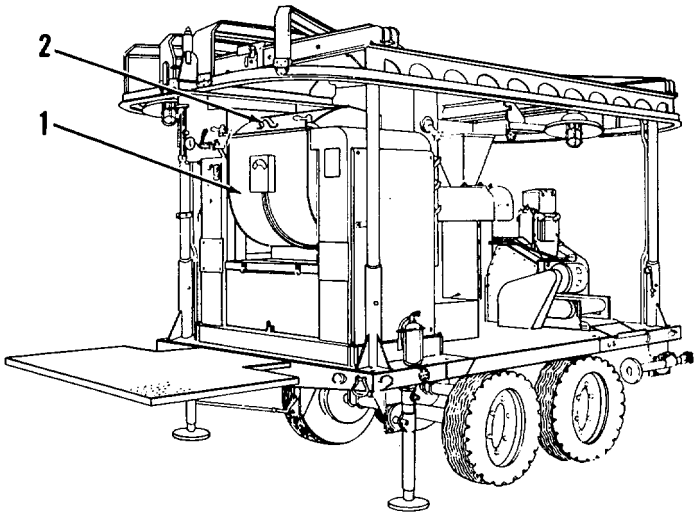

3-1. MIXERASSEMBLY - Continued

(3) Place approximately 3 1/2 gallons (13.2 liters) of warm water in mixing bowl.

CAUTION

Keep water below the agitator shaft. Water should not exceed 150 ° F (65.6 ° C) or damage to the thermometer may result. DO NOT run the mixer after water has been added.

(4) Lower bowl (1) to 2/3 raised position and moisten the inside of the mixing bowl and agitator arm (2) with a cloth.

(5) Raise bowl to closed position and wash all dough from top of mixer and mixer lid.

(6) Lower the mixer bowl to 2/3 raised position and wash all dough from inside of bowl and on agitator arm. To clean the mixer bowl, a lint-free cloth or sponge is recommended. To clean between agitator arms and mixer bowl, work a cloth between the agitator arms and sides of mixer and move cloth back and forth between the arms and bowl, and around agitator shaft.

(7) Remove water from mixing bowl and rinse with clean, warm sanitizing solution, making sure to cover all surfaces and crevices. Remove rinse solution and dry thoroughly with compressed air. Apply a coating of divider oil to all dough contacting surfaces using a lint-free cloth or sponge. On completion, the mixer should be tightly closed.

(8) Wash the outside of mixer and mixer platform (3) with warm soapy water, then rinse.

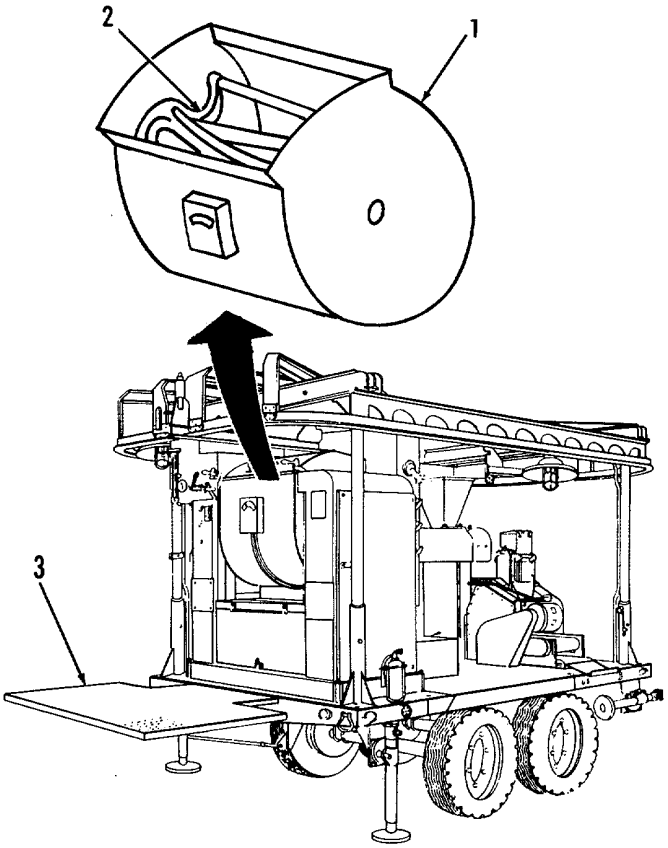

NOTE

Sanitizing rinses may be prepared by dissolving of package of disinfectant, Chlorine, Food Service (NSN 6840-00-270-7812), into 25 gallons (94.6 liters) of water. An alternate method is to dissolve 2 ampuls of Water Purification, Powder, Chlorine (NSN 6850-00-270-6225) in 1 gallon (3.8 liters) of water.

32. DOUGH DIVIDER

a. Removal.

(1) Remove top lever cover.

(2) With divider knife in rear-most position, loosen wingbolt at back end of top link arm (1).

(3) Lift back end of top link arm (1) clear of side lever pin.

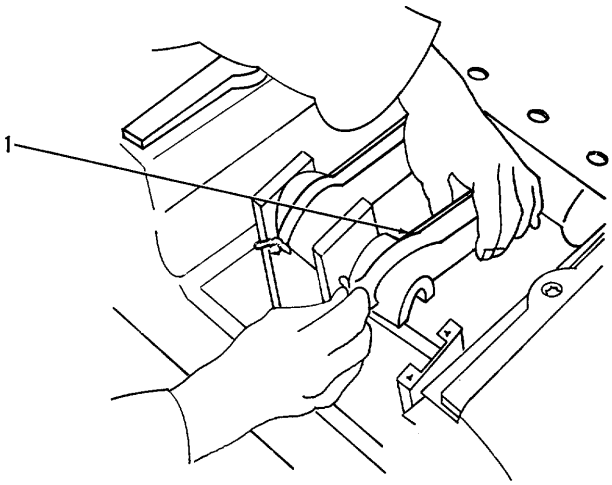

(4) Slide knife (2) to rear until it clears track and lift out knife.

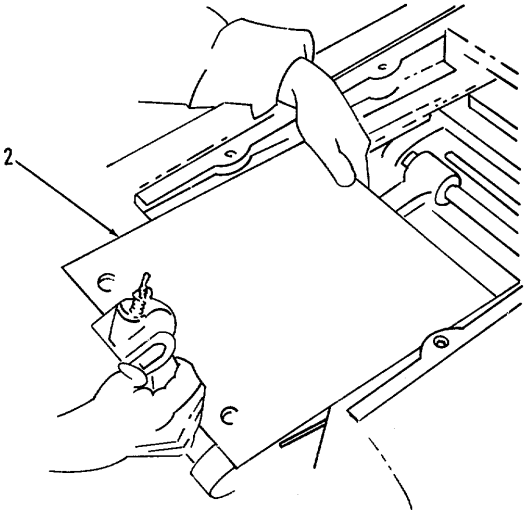

3.2. DOUGH DIVIDER - Continued

(5) Move plunger and linkage to rear-most position.

(6) Loosen wingbolt located at back of top link arm (3).

(7) Lift back end of top link arm (3) clear of side lever pin.

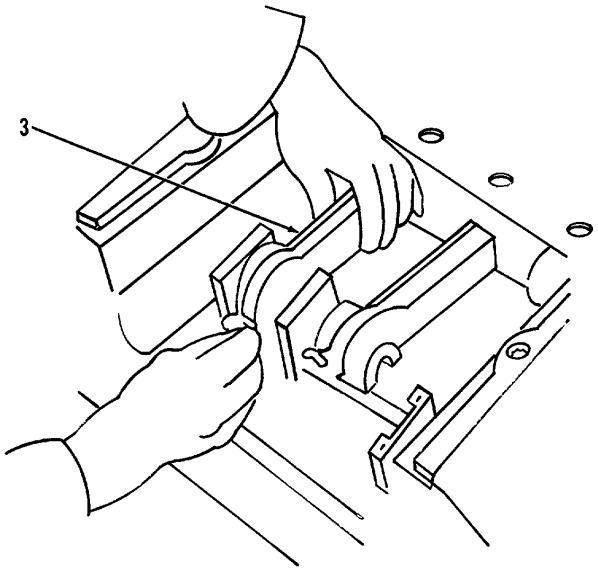

(8) Slide plunger (4) to rear and lift it out.

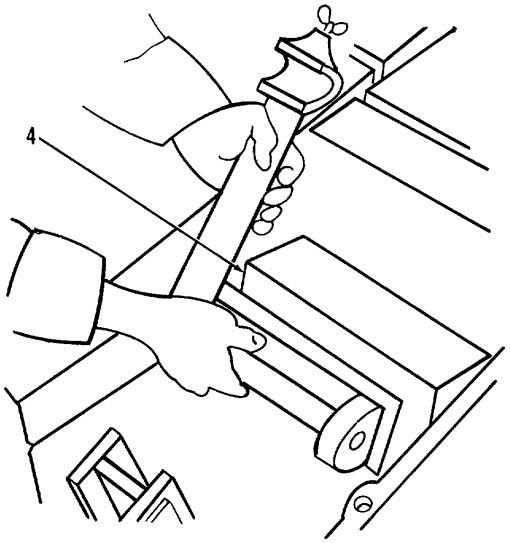

3-2. DOUGH DIVIDER - Continued

(9) Tilt divider cylinder (5) forward, disengauge and drop down piston lever (6), and lift out piston (7).

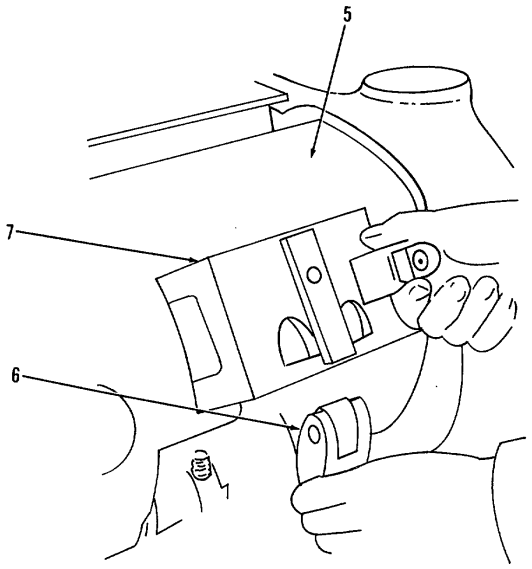

(10) Using socket wrench, tighten nuts on tapered locating pins (8) to withdraw pins and remove pins from dough box top (9).

(11) Remove socket head screws (10) and remove dough box top (9).

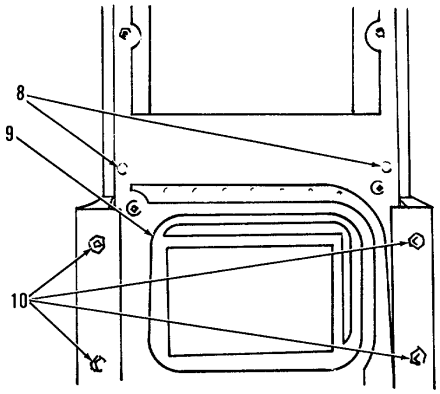

3.2. DOUGH DIVIDER - Continued

b. Inspection. Inspect knife (11), plunger (12), links (13) and piston (14) to be sure they are clean and not damaged. Handle the piston with care to avoid dents, nicks or other damage.

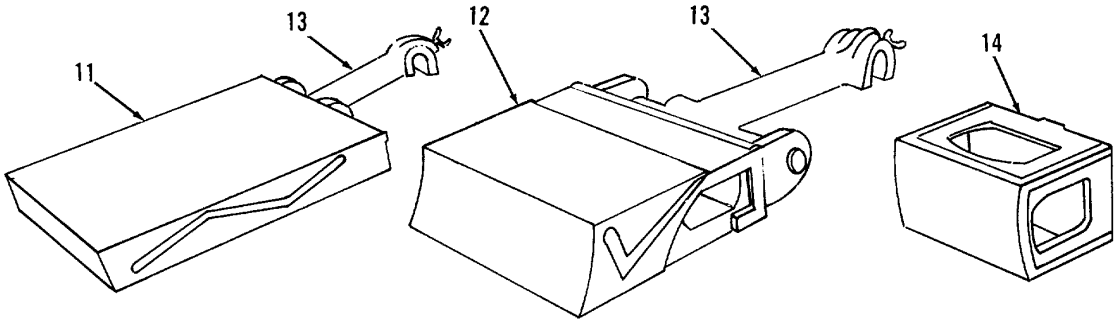

c. Cleaning.

(1) Turn OFF magnetic starters (1 and 2) and remove conveyor belts (3 and 4) for the divider and molder to prevent contamination of the belts while cleaning the divider.

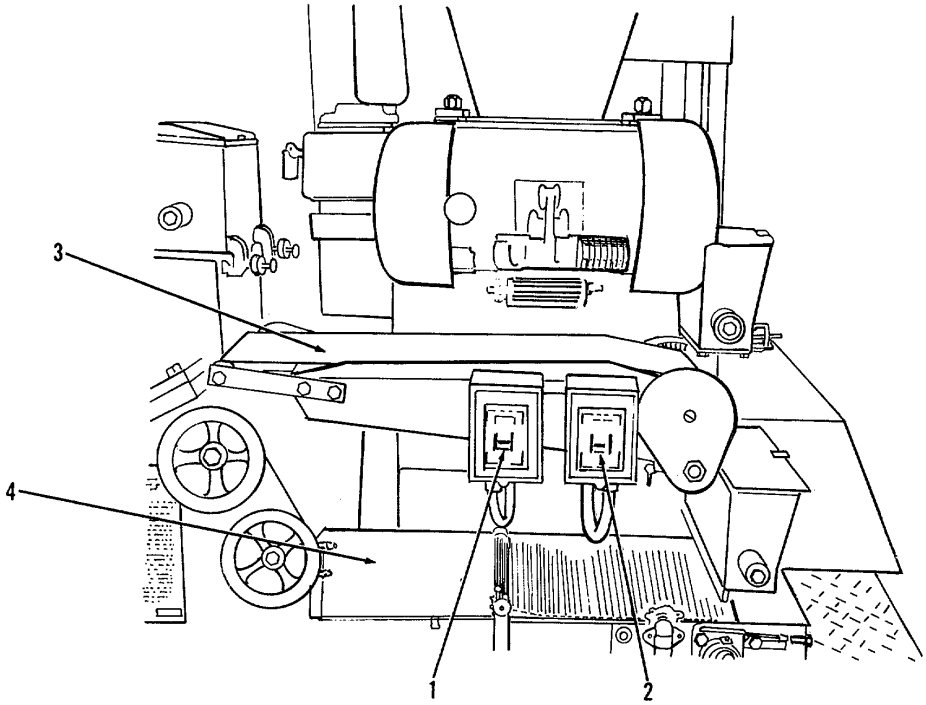

3.2. DOUGH DIVIDER - Continued

(2) Wash the divider hopper, piston, head knife, and plunger in hot water, rinse in warm, sanitizing solution and dry thoroughly with compressed air.

(3) Distribute a light coating of divider oil inside of dividers to soften dough, then remove all dough from inside of divider. Areas that are difficult to reach can be cleaned with suitable scrapers.

(4) After divider and parts have been cleaned, rinse all cleaned surfaces with a warm, sanitizing solution, dry thoroughly with compressed air, lubricate with divider oil, and reassemble and cover the units with canvas covers which are provided for that purpose.

d. Installation.

(1) Install divider and molder conveyor belts, unless molder pressure board is to be cleaned next, then install only the divider conveyor belt.

(2) Install dough box top (1) and install socket head screws (2) but do not tighten fully.

(3) Back-off nuts on tapered locating pins (3) until nuts are flush with heads of pins. Install pins (3) and drive into dough box top (1) until secure. Tighten socket head screws (2).

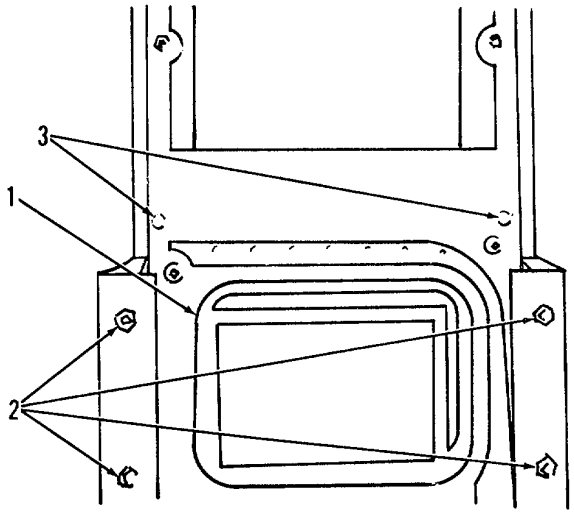

3.2. DOUGH DIVIDER - Continued

(4) Tilt divider cylinder (4) forward, install piston (5) in place, then raise up piston lever (6) and engage.

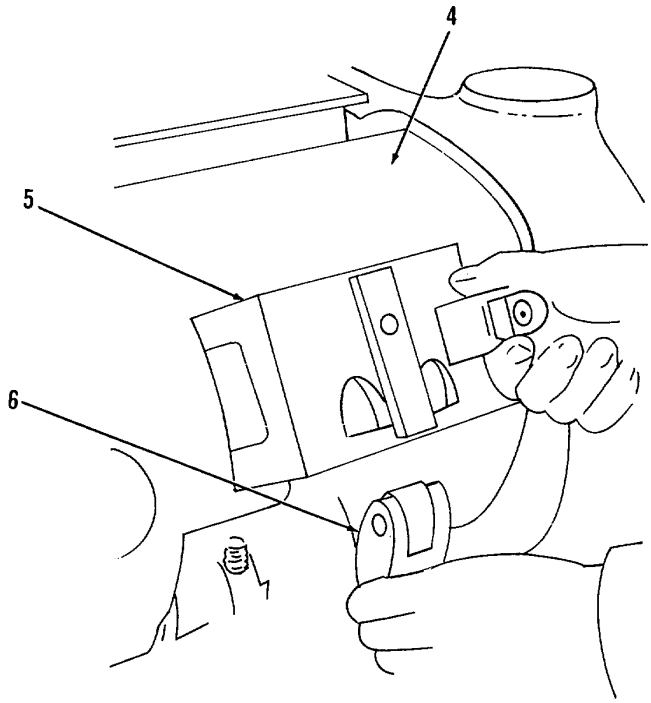

(5) Place plunger (7) in its track and slide forward to its rearmost position.

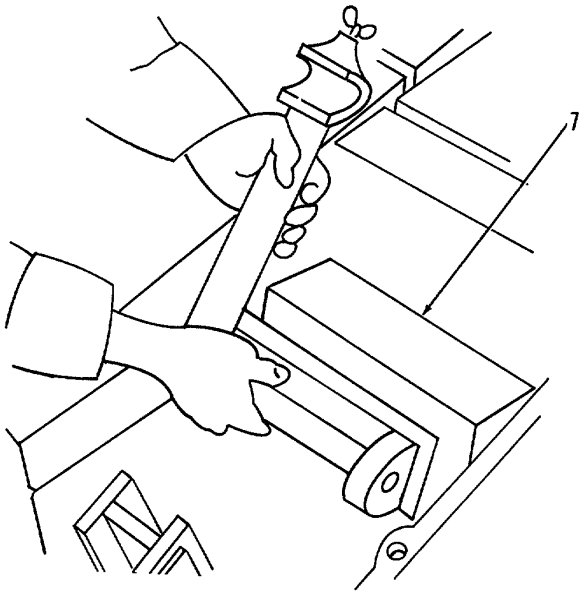

3.2. DOUGH DIVIDER - Continued

(6) Place back end of top link arm (8) onto side lever pin.

(7) Tighten wingbolt on back of top link arm (8).

(8) Move plunger and linkage to foremost position.

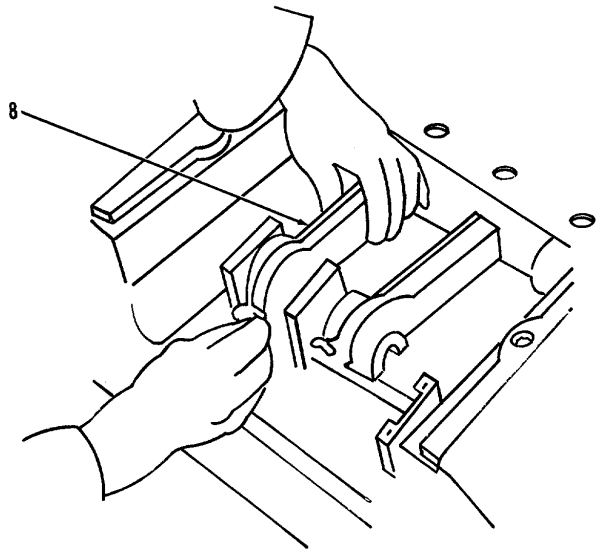

(9) Place head knife (9) in its track and slide forward to its rearmost position.

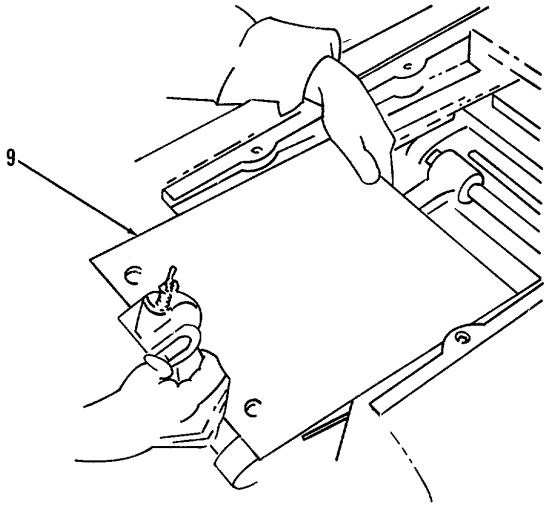

3.2. DOUGH DIVIDER - Continued

(10) Place back end of top link arm (10) onto side lever pin.

(11) Tighten wingbolt on back of top link arm (10).

(12) Move knife and linkage to foremost position.

(13) Replace top lever cover.

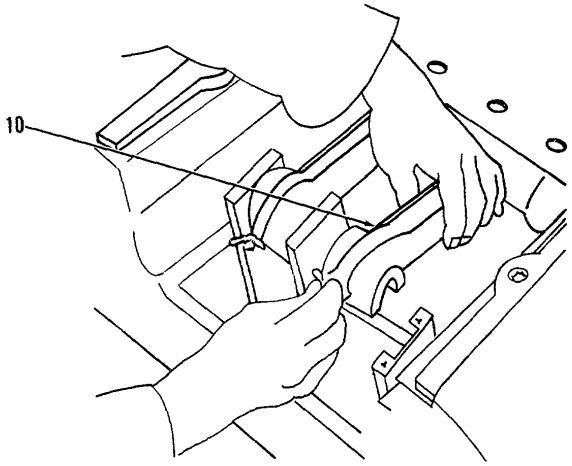

3-3. MOLDER PRESSURE BOARD

The molder pressure board (1) is located beneath the conveyor belt (2) and extends from one end of the molder to the other.

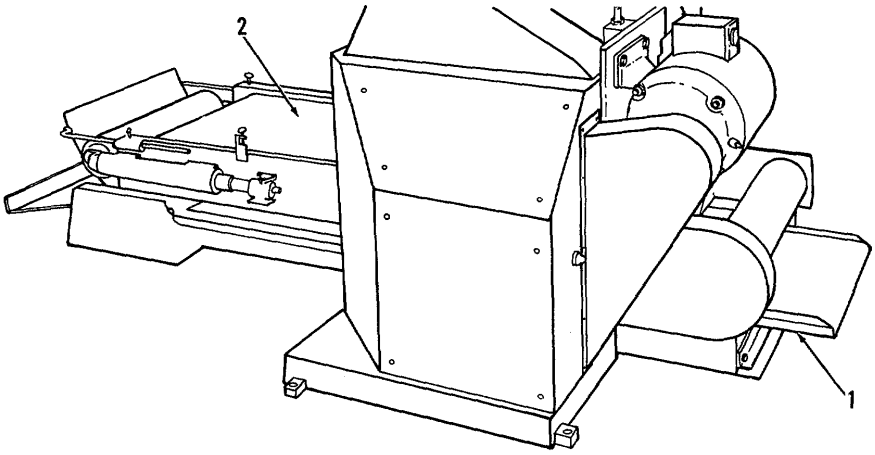

3-3. MOLDER PRESSURE BOARD - Continued

a. Removal

NOTE

Molder belt should have been removed prior to cleaning the divider. This protects the belt from contamination while the divider is being cleaned.

(1) Raise pressure board at discharge end,disengauge drop slots from holding rods, and pull out board.

(2) Remove sheeting roll scrapers, dough guides, curling screen, and back plates.

b. Cleaning

WARNING

DO NOT turn on molder during cleaning.

(1) Clean the sheeting rolls with any suitable type scraper. With shoulder belt removed, it is possible to turn the drive pulley by hand to clean all areas of the sheeting rolls. This makes it unnecessary to have the molder running during cleaning period and is a very important safety feature.

(2) Rinse the clean sheeting rolls with a sanitizing solution, dry thoroughly with compressed air, lubricate with divider oil, and reassemble.

(3) Clean, sanitize, dry, and replace sheeting roll scraper.

(4) Clean, sanitize, and dry dough guides, curling screen and back plate.

(5) With dough scraper and stiff brush (GI Brush, not wire), clean pressure board. Care should be exercised to prevent gouging into the wood of the pressure board.

(6) Clean molder and divider belts by brushing with a GI Brush.

(7) Wash the outside of molder and divider with hot, soapy water and rinse.

c. Installation

(1) Reassemble divider and molder belts, dough guides, pressure board, curling screen and back plates.

(2) Position pressure board into place with discharge end raised, engage drop slots onto holding rods and lower the pressure board.

3-4. OVEN CONVEYOR CRANKS

The conveyor cranks (1) are wrapped in burlap and placed in a storage compartment during transit.

a. Inspection. Inspect cranks to be sure they operate properly and are not damaged.

b. Replacement. If crank is unserviceable, replace it with a serviceable one.

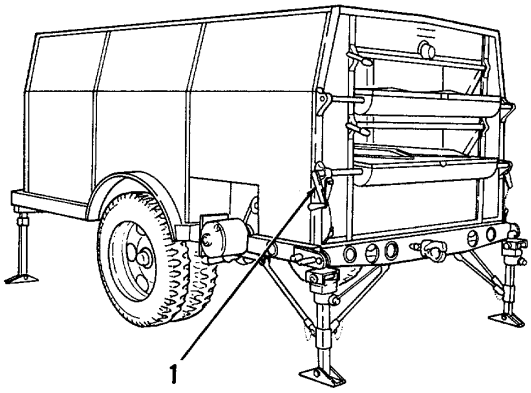

3-5. PRESSURE RELIEF SHEETS

Inspect pressure relief sheets (1) to be sure they are in serviceable condition and securely fastened. During operation of oven trailer, the access doors to the pressure relief sheets must be in OPEN position.

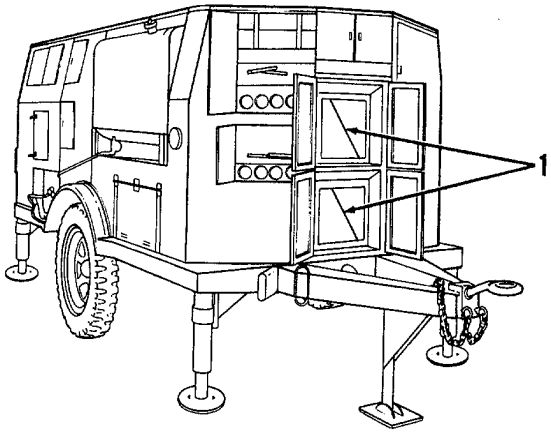

Section IV. Maintenance of Auxiliary Equipment

Refer to the pertinent technical manuals for maintenance instructions for the particular equipment models procured to support the operation of the bakery plant. Auxiliary equipment includes but is not limited to the following:

(1) generator set, electrical power source

(2) air compressor

(3) storage units

CHAPTER 4

MAINTENANCE OF AUXILIARY EQUIPMENT

Refer to the technical manuals listed below for maintenance instructions for the particular equipment models procured to support the operation of the bakery plant. Auxiliary equipment includes but is not limited to the following:

(1) Generator set, electrical power source: TM5-6115-365-15, TM5-6115-465-12.

(2) Air compressor: TM5-4310-252-12.

(3) Storage units.

GENERAL

TM 5-6115-365-15	Maintenance of Generator Set
TM 5-6115-465-12	Maintenance of Generator Set
TM 5-4310-252-12	Maintenance of Air Compressor

APPENDIX A

REFERENCES

FIRE PROTECTION AND SAFETY

TB 5-4200-200-10	Hand Portable Fire Extinguishers Approved for Army Users
TB MED 501	Hearing Conservation

LUBRICATION

C91001 IL	Fuels, Lubricant, Oils, and Waxes
LO 10-7630-201-20-1	Bakery Plant, Mobile (Mixer)
LO 10-7360-201-20-2	Bakery Plant, Mobile (Divider)
LO 10-7360-201-20-3	Bakery Plant, Mobile (Molder)
LO 10-7360-201-20-4	Bakery Plant, Mobile (Mono-rail and Trailer Chassis)

PAINTING

TM 43-0139	Painting Instructions for Field Use

CLEANING

FED SPEC	PD 680 - Dry Cleaning Solvent
DA PAM 738-750	The Army Maintenance Management System (TAMMS)

DEMOLITION

TM 750-244-3	Destruction of Equipment to Prevent Enemy Use
FM 11-65	Radio Interference Suppression

GENERAL

TM 5-6115-365-15	Maintenance of Generator Set
TM 6115-465-12	Maintenance of Generator Set
TM 5-4310-252-12	Maintenance of Air Compressor

APPENDIX B

COMPONENTS OF END ITEM AND BASIC ISSUE ITEMS LISTS

Section I. INTRODUCTION

B-1. Scope

This appendix lists components of end item and basic issue items for the Bakery Plant to help you inventory items required for safe and efficient operation.

B-2. General

The Components of End Item and Basic Issue Items Lists are divided into the following sections:

a. Section II. Components of End Item. This listing is for informational purposes only, and is not authority to requisition replacements. These items are part of the end item, but are removed and separately packaged for transportation of shipment. As part of the end item, these items must be with the end item whenever it is issued or transferred between property accounts. Illustrations are furnished to assist you in identifying the items.

b. Section III. Basic Issue Items. These are the minimum essential items required to place the Bakery Plant in operation, to operate it, and to perform emergency repairs. Although shipped separately packaged, BII must be with the Bakery Plant during operation and whenever it is transferred between property accounts. The illustrations will assist you with hard-to-identify items. This manual is your authority to request/requisition replacement BII, based on TOEIMTOE authorization of the end item.

B-3. Explanation of Columns

The following provides an explanation of columns found in the tabular listings:

a. Column (1) Illustration Number. This column indicates the number of the illustration in which the item is shown.

b. Column (2) National Stock Number. Indicates the National stock number assigned to the item and will be used for requisitioning purposes.

c. Column (3) Description. Indicates the Federal item name and, if required, a minimum description to identify and locate the item. The last line for each item indicates the FSCM (in parentheses) followed by the part number. If item needed differs for different models of this equipment, the model is shown under the "Usable On" heading in this column. These codes are identified as:

B-3. Explanation of Columns - Continued

Code	Used On
BWU	Dough Mixing and Makeup Outfit (All Models)
BWT	Dough Proofer (All Models)
DNP	Bakery Oven
DNQ	All Models
DNR	All Models
DPJ	Sifter, (Machine)
DPK	All Models

d. Column (4) - Unit of Measure (UIM). Indicates the measure used in performing the actual operational/maintenance function. This measure is expressed by a two-character alphabetical abbreviation (e.g., ea, in, pr).

e. Column (5) - Quantity required (Qty rqr). Indicates the quantity of the item authorized to be used with/on the equipment.

Section II. COMPONENTS OF END ITEM

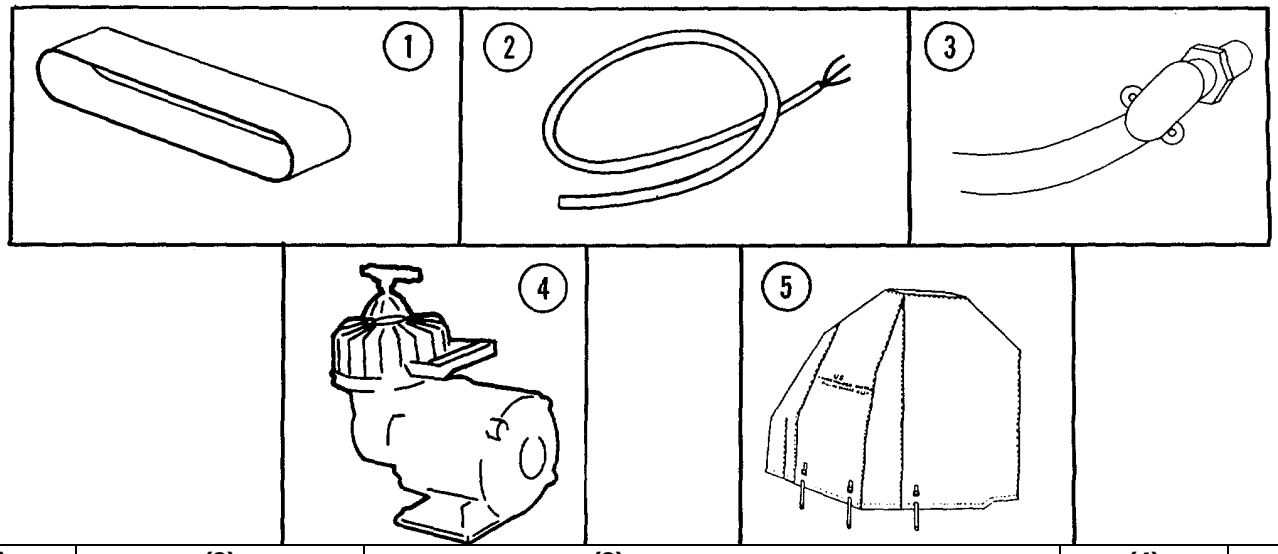

(1) Illus No.	(2) National Stock No.	(3) Description FSCM and Part No.	Usable On Code	(4) U/M	(5) Qty Rqr
		(DOUGH MIXING AND MAKEUP OUTFIT)			
1	3030-00-153-4524	Belt, Flat, Cotton Duck, 8 inch width out, 0.174 Thk, 80 inch inside circle (Divider Conveyor Assy) (89564) PX674	BWU	EA	1
2	6145-00-359-6069	Cable Power, 50 Ft. Lg. (13305) 235H4	BWU	EA	1
3	6145-00-450-0477	Cable, Power, Elec. 3 Cond, No. 12 AWG, 600 V, Rubber Covered, 10 Ft. Lg. (Used on Dough Divider) (81349) CC03HCF3-12SJ0680	BWU	EA	1
4	4310-00-631-5693	Compressor, Air (32242) 110LAG	BWU	EA	1
5	7320-00-359-5835	Cover, Canvas, Divider (13305) M534F17-2	BWU	EA	1

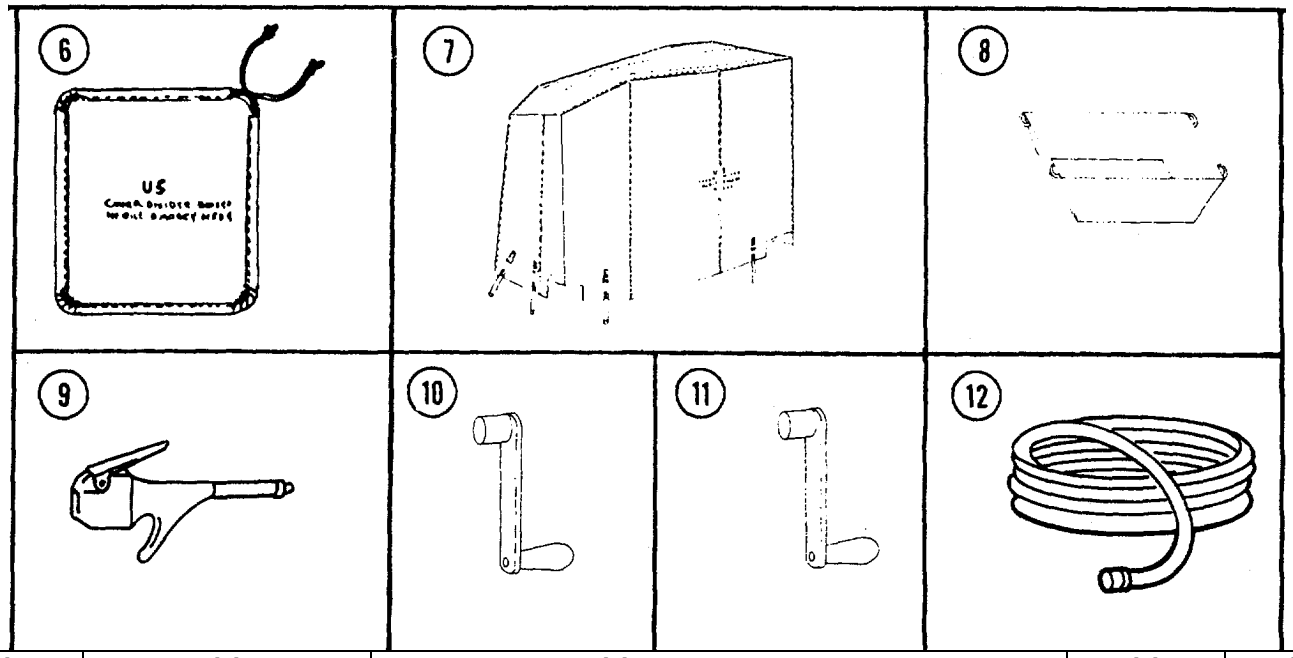

(1) Illus No.	(2) National Stock No.	(3) Description FSCM and Part No.	Usable On Code	(4) U/M	(5) Qty Rqr
6	7320-00-359-5834	Cover, Canvas, Hopper Cover (13305) M534F17-1	BWU	EA	1
7	7320-00-359-5836	Cover, Canvas, Mixer (13305) M534F17-3	BWU	EA	1
8	7320-00-221-2416	Dough Trough, Steel, W/Top Cover	BWU	EA	5
9	4940-00-241-3075	Gun, Air Flow (07334)150	BWU	EA	1
10	2590-00-375-1288	Handle, Crank Trailer Leveling Jack (71770) 10065A	BWU	EA	4
11	2590-00-860-0533	Handle, Crank, Trailer Leveling	BWU	EA	2
12	7360-00-300-0001	Hose, Air, 25 Ft. Lg. (13859) B3231-25-1	BWU	EA	1

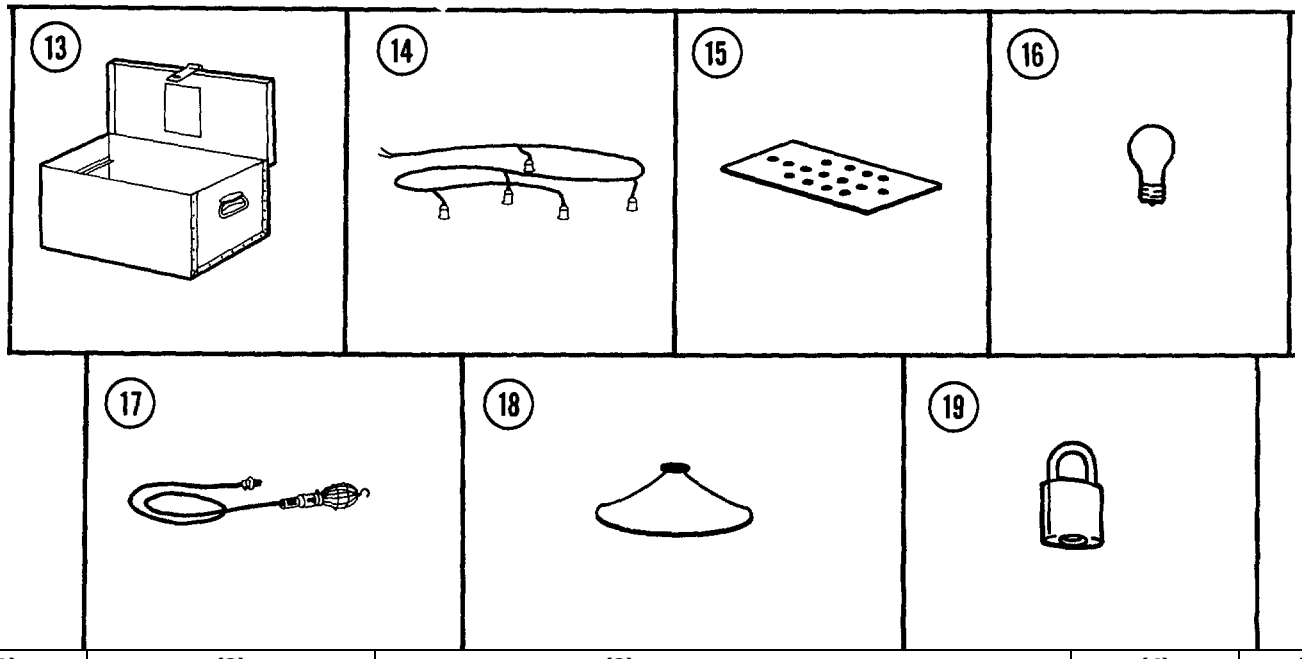

(1) Illus No.	(2) National Stock No.	(3) Description FSCM and Part No.	Usable On Code	(4) U/M	(5) Qty Rqr
	7320-00-832-8548	Kit, Lighting, consisting of: (81337) 5-13-2176		EA	1
13		Box, Light Kit (13305) M534C14-8	BWU	EA	1
14	7320-00-185-1023	Cord Lighting	BWU	EA	2
15		Holder (13305) M534C14	BWU	EA	1
16	6240-00-246-5052	Lamp, Incand, 120V, 100W (79500) 100ARS120	BWU	EA	17
17	6230-00-185-1025	Light Cord, Portable (13305) M534C14-5	BWU	EA	2
18		Light Reflector (06859) 11075N	BWU	EA	8
19	5340-00-582-2741	Padlock, 1-½ inch Wide by 1-¼ inch High (96906) MS35647-4	BWU	EA	1

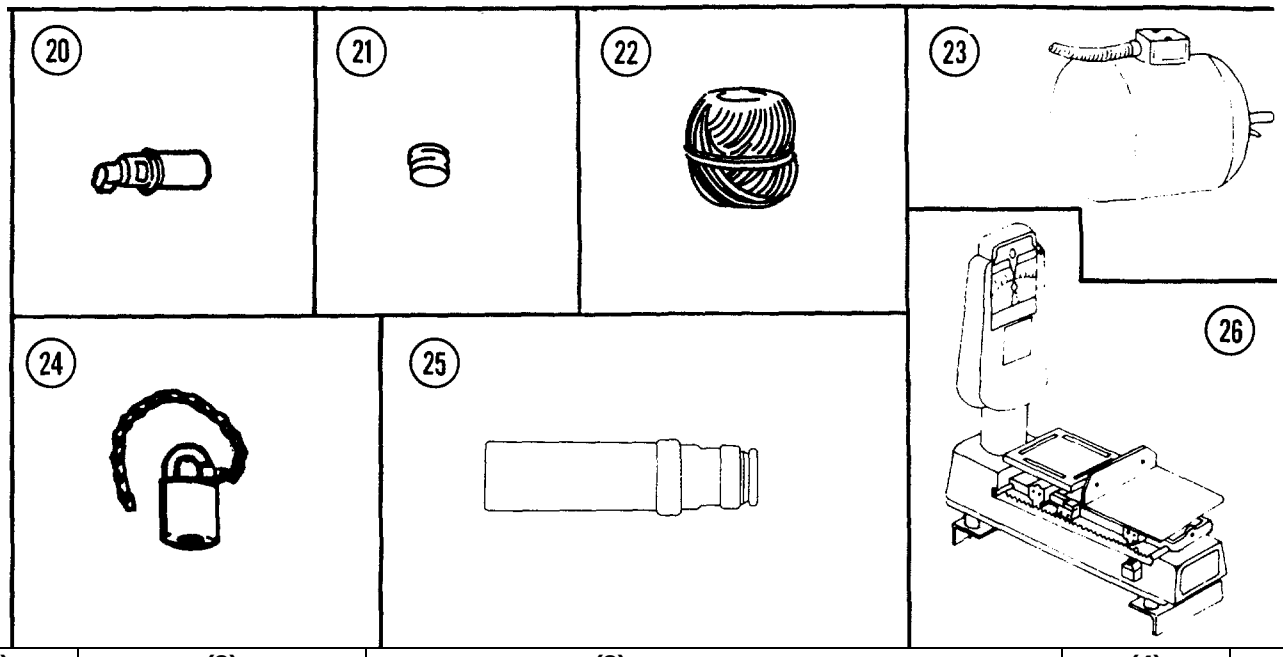

(1) Illus No.	(2) National Stock No.	(3) Description FSCM and Part No.	Usable On Code	(4) U/M	(5) Qty Rqr
20	5935-00-359-5990	Plug, Elec. (80495) 5498G1	BWU	EA	2
21		Reflector Holder (06859) 4385-Type P	BWU	EA	8
22	4020-00-233-5990	Twine (81348) TT871 Type 1 NOTE: End of Components in Kit	BWU	EA	1
23	6105-00-188-1678	Motor, Elec. For Divider. (Spare Motor) (05472) M3606	BWU	EA	1
24	5340-00-298-7155	Padlock, w/9-inch Chain	BWU	EA	2
25	5935-00-097-3172	Plug, Power BWU (13305) 235H5		EA	1
26	6670-00-164-0550	Scale, Dial and Beam Indicating, 5 lb. Cap. Bench/Counter (60266) 3012	BWU	EA	1

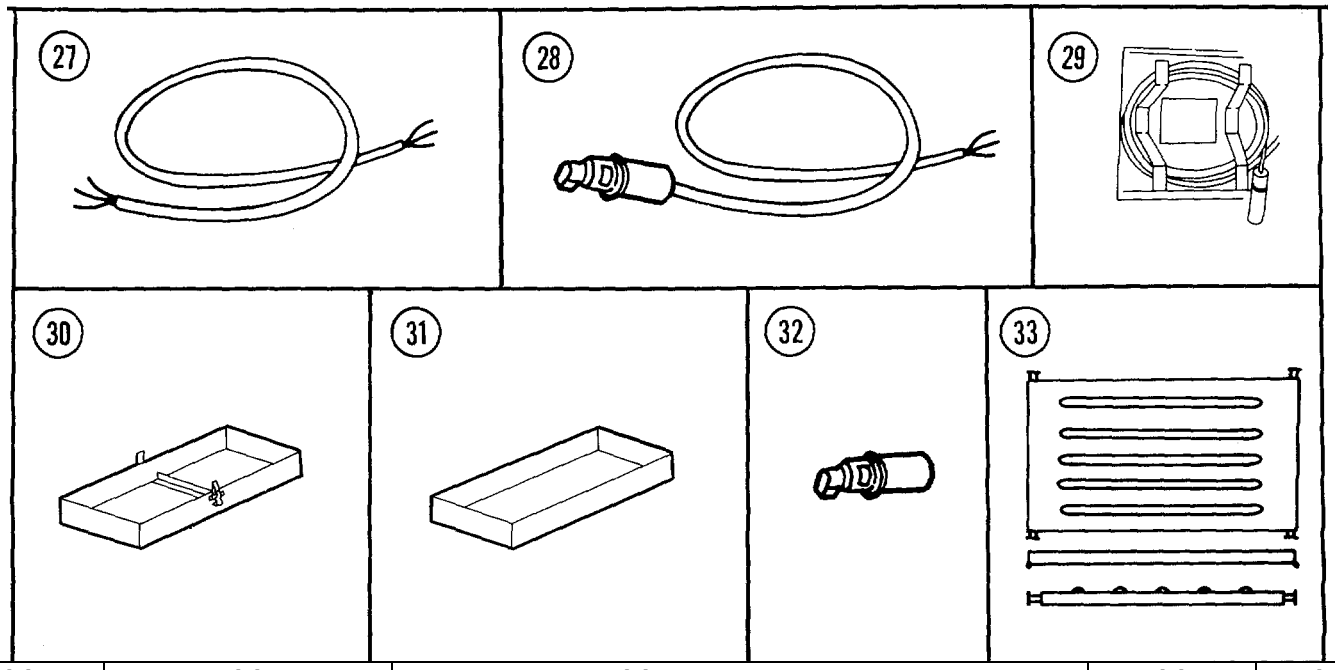

(1) Illus No.	(2) National Stock No.	(3) Description FSCM and Part No.	Usable On Code	(4) U/M	(5) Qty Rqr
		(DOUGH PROOFING CABINET)			
27	6145-00-885-5944	Cable, Power	BWT	FT	16
28	6150-00-448-2596	Cable Power Assembly	BWT	EA	1
29	6150-01-015-3091	Cable: w/Terminals, Proofing Cabinet, Power Input (81337) 5-11-971-23-8	BWT	EA	1
30	7320-00-359-9090	Pan: w/Clamp, Proofing Cabinet Humidifying (18664) 10924T	BWT	EA	4
31	7320-00-444-0006	Pan, Water	BWT	EA	4
32	5935-00-359-5992	Plug BWT		EA	1
33	7330-00-234-7401	Tray Assembly (81349) MIL-P-3852, Size 2	BWT	EA	36

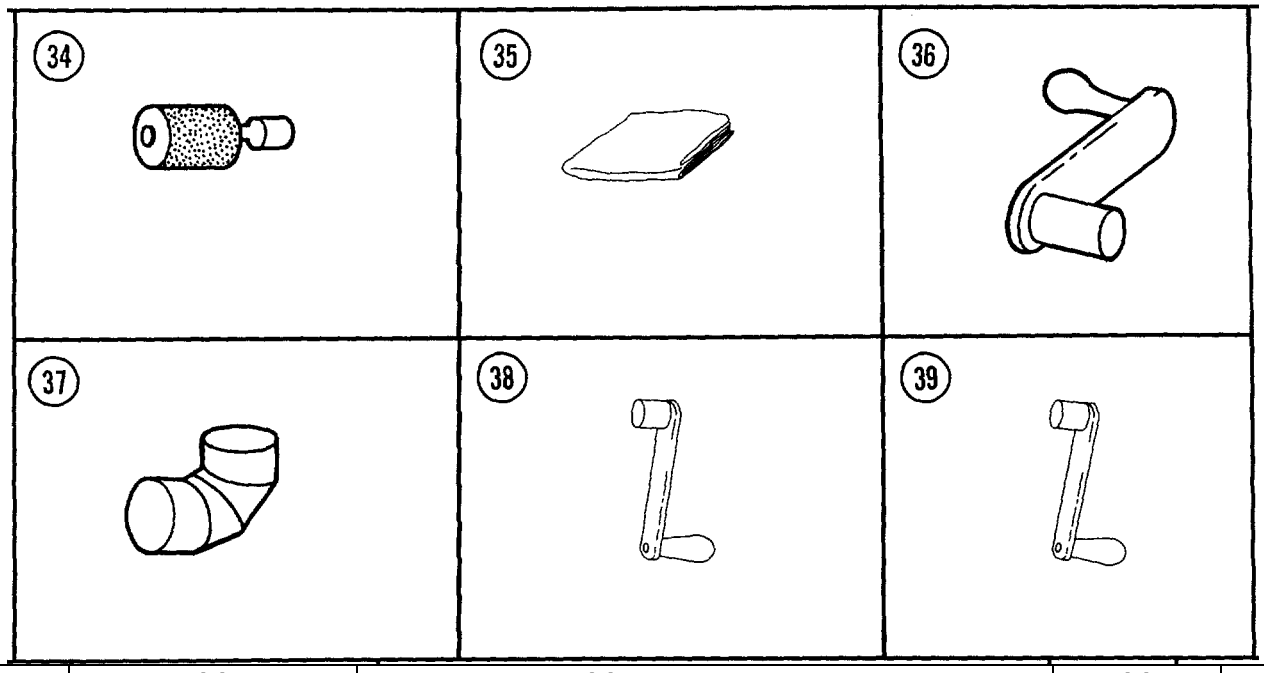

(1) Illus No.	(2) National Stock No.	(3) Description FSCM and Part No.	Usable On Code	(4) U/M	(5) Qty Rqr
		(BAKERY OVEN)			
34	7310-00-930-7334	Brush, Heat Tube DNP		EA	1
		(13305) 235E2DNQ		EA	1
		DNR		EA	1
35	7310-00-359-5837	Cover, Canvas, Oven DNP		EA	1
		Trailer DNQ		EA	1
		DNR		EA	1
36	7310-00-359-9039	Crank, Oven Conveyor DNP		EA	4
		Driveshaft DNQ		EA	4
		DNR		EA	4
37	4520-00-272-8659	Elbow, Pipe, Stove, DNP		EA	2
		Oven, 4 inch Dia., 900 DNQ		EA	2
		DNR		EA	2
38	2590-00-375-1288	Handle Crank, Trailer DNP		EA	4
		Leveling Jacks DNQ		EA	4
39	2590-00-860-0533	Handle Crank, Trailer DNR		EA	2
		Leveling Jacks			

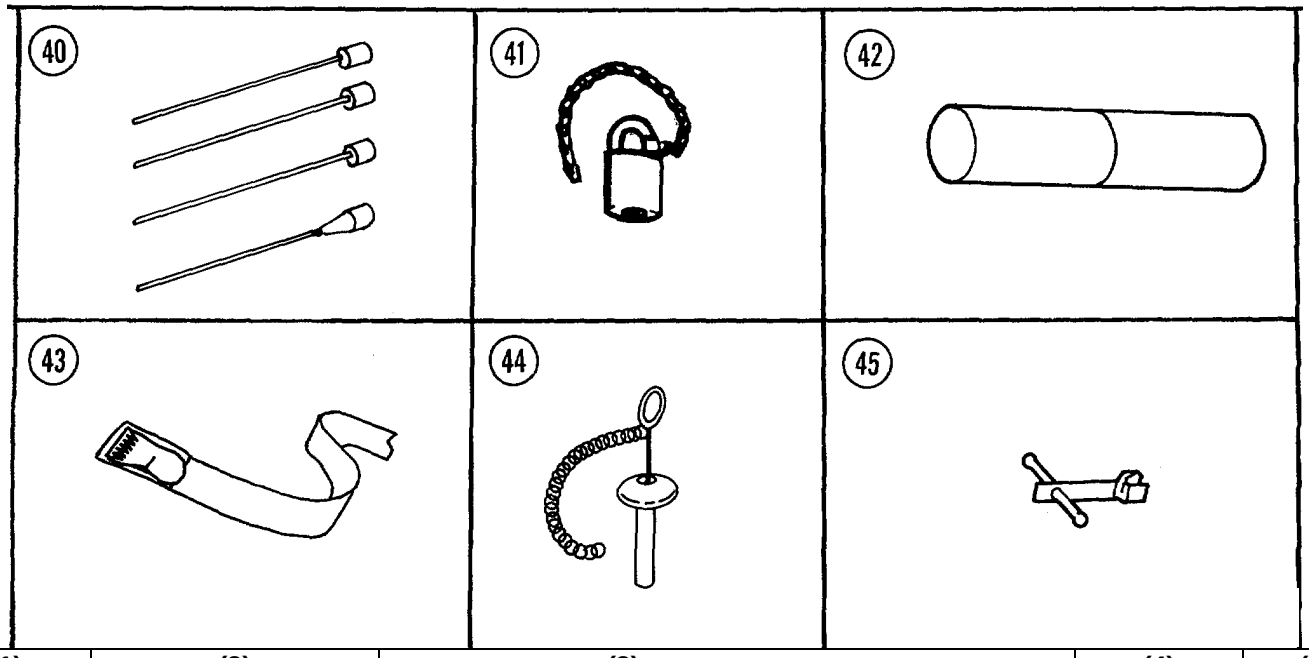

(1) Illus No.	(2) National Stock No.	(3) Description FSCM and Part No.	Usable On Code	(4) U/M	(5) Qty Rqr
40	7310-00-960-4459	Handle Extension,	DNP	EA	1
		Assembly Heat Tube	DNQ	EA	1
		(81337)5-11-896-49	DNR	EA	1
41	5430-00-298-7155	Padlock W/9 inch Chain	DNP	EA	2
			DNQ		
			DNR	EA	2
				EA	2
42	4520-00-277-8339	Pipe Stove, Oven Joints	DNP	EA	4
		Straight 4 inch Dia.,	DNQ	EA	4
		24 inches Lg. Nested	DNR	EA	4
43	4530-00-161-2064	Strap, w/Buckle, Web	DNP	EA	2
		Oven Burner, 1-114 inch	DNQ	EA	2
		by 56 inches	DNR	EA	2
44	7310-00-359-9604	Torch Assembly	DNP	EA	1
		(81209) 2009	DNQ	EA	1
			DNR	EA	1
45	7310-00-916-5887	Wrench Thimble	DNP	EA	1
		(13305) 235 E23	DNQ	EA	1
			DNR	EA	1

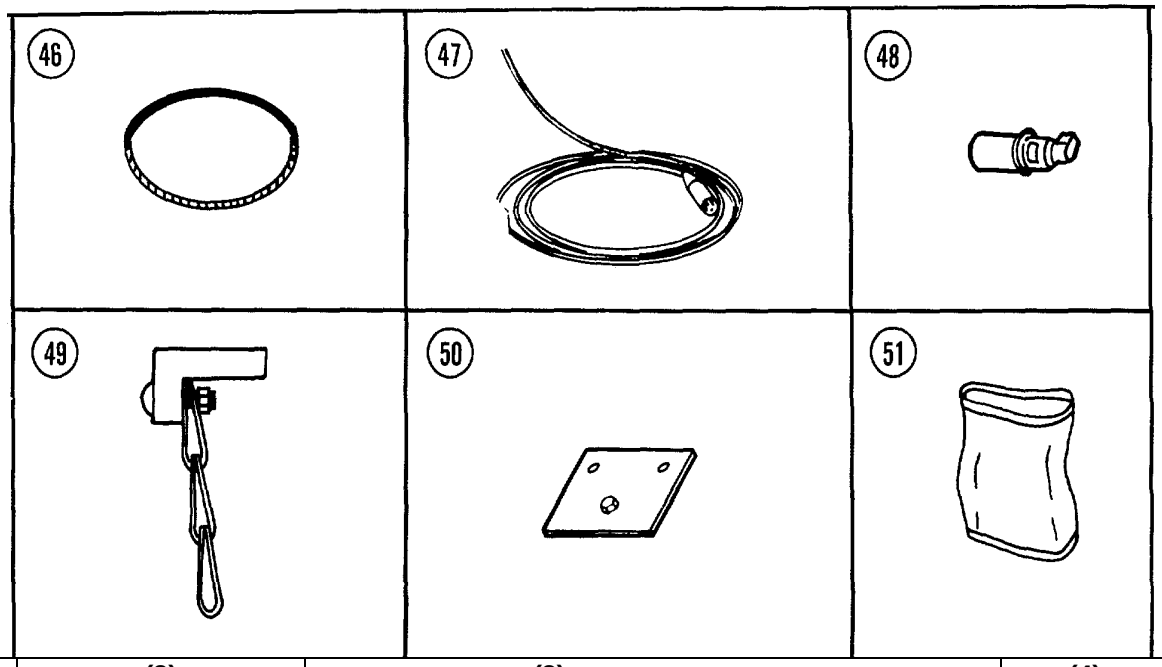

(1) Illus No.	(2) National Stock No.	(3) Description FSCM and Part No.	Usable On Code	(4) U/M	(5) Qty Rqr
		(SIFTER MACHINE)			
46	3030-00-230-6835	Belt, "V"	DPJ	EA	1
		(92392) 06-480-118-150	DPK	EA	1
47	6145-00-548-1243	Cable, Power	DPJ	EA	1
			DPK	EA	1
48	5935-00-359-5990	Plug, Power	DPJ	EA	1
		(97297) 331324	DPK	EA	1
		Stake Assembly, includes: (97297)33190			
49	7320-00-221-5224	Chain, Safety	DPJ	EA	1
		(97297)331193	DPK	EA	1
50	7320-00-221-5234	Plate, Hook	DPJ	EA	1
		(97297) 331210	DPK	EA	1
51	7320-00-301-4064	Tube, Cloth, Sifter	DPJ	EA	1
		Feed Hopper	DPK	EA	1
		(92392) 06-063-787-513			

Section III. BASIC ISSUE ITEMS FOR DOUGH MIXING AND MAKEUP OUTFIT; DOUGH PROOFING CABINET; SIFTER MACHINE; AND BAKERY OVEN

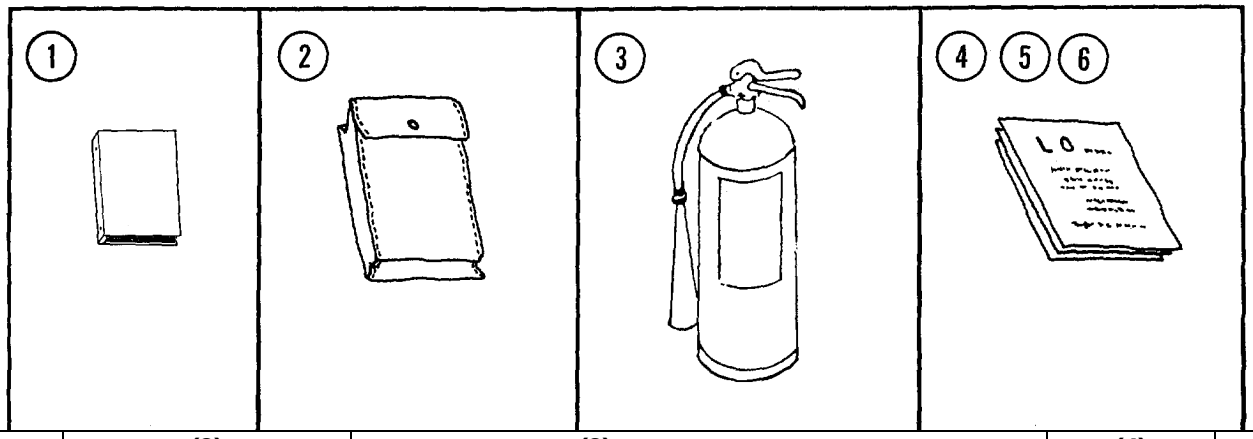

(1) Illus No.	(2) National Stock No.	(3) Description FSCM and Part No.	Usable On Code	(4) U/M	(5) Qty Rqr
1	7510-00-889-3494	Binder, Looseleaf	BWU	EA	1
			BNP	EA	1
			DNQ	EA	1
			DNR	EA	1
2	7530-00-559-9618	Case, Manual	BWU	EA	1
			DNP	EA	1
			DNQ	EA	1
			DNR	EA	1
3	4210-00-270-4512	Extinguisher, Fire	BWU	EA	1
			DNP	EA	1
			DNQ	EA	1
			DNR	EA	1
4		LO 10-7360-201-20-1 (Mixer)	BWU	EA	1
5		LO 10-7360-201-20-2 (Divider)	BWU	EA	1
6		LO 10-7360-201-20-3 (Molder)	BWU	EA	1

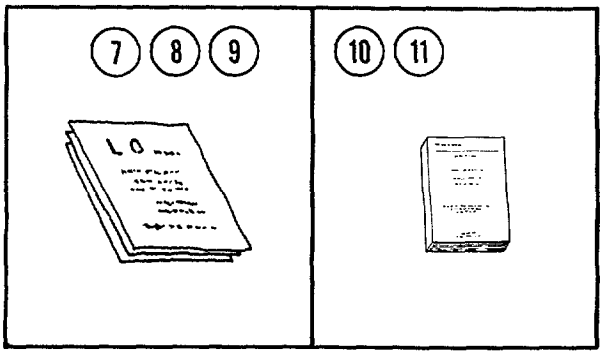

(1) Illus No.	(2) National Stock No.	(3) Description FSCM and Part No.	Usable On Code	(4) U/M	(5) Qty Rqr
7		LO 10-7360-201-4 (Mono-rail and Trailer Chassis)	BWU	EA	1
8		LO 10-7360-201-5 (Bakery Oven)	DNP DNQ DNR	EA	1
9		LO 10-7360-201-6 (Chassis Trailer)	DNP DNQ DNR	EA EA EA	1 1 1
10		TM 10-7860-201-10 (Operator's Manual)	BWU BWT DNP DPJ	EA EA EA EA	1 1 1 1
11		TM 9-2330-274-14 (Operator's Manual, Trailer Chassis	BWU	EA	1

APPENDIX C
EXPENDABLE SUPPLIES AND MATERIALS LIST

Section I. INTRODUCTION

C-1. Scope

This appendix lists expendable supplies and materials you will need to operate and maintain the Bakery equipment. These items are authorized to you by CTA 50-970. Expendable Items (except Medical Class V, Repair Parts and Heraldic).

C-2. Explanation of Columns

a. Column 1 Item Number. This number is assigned to the entry in the listing and is referenced in the narrative instructions to identify the material (e.g., "Use cleaning compound, item 5").

b. Column 2 Level. This column identifies the lowest level of maintenance that requires the listed item.

(enter as applicable)

C - Operator/Crew

O - Organizational Maintenance

F - Direct Support Maintenance

H - General Support Maintenance

c. Column 3 National Stock Number. This is a National stock number assigned to the item; use it to request or requisition the item.

d. Column 4 Description. Indicates the Federal item name and, if required, a description to identify the item. The last line for each item indicates the Federal Supply Code for Manufacturer (FSCM) in parentheses followed by the part number.

e. Column 5 Unit of Measure (UIM). Indicates the measure used in performing the actual maintenance function. This measure is expressed by a two-character alphabetical abbreviation (e.g., ea, in, pr). If the unit of measure differs from the unit of issue, requisition the lowest unit of issue that will satisfy your requirements.

Section II. EXPENDABLE SUPPLIES AND MATERIALS LIST

(1) Item No.	(2) Level	(3) National Stock Number	(4) Description	(5) UIM
			(DOUGH MIXING AND MAKEUP OUTFIT)	
1	C, O	9150-00-252-6375	Brake Fluid, Automotive	GL
2	C, O	9150-00-190-0904	Grease, Automotive and Artillery	LB
3	C, O	9150-00-188-9858	Lubricating Oil, Internal Combustion Engine (OEIHDD-30)	GL
4	C, O	9150-00-577-5844	Lubricating Oil, Gear, G090	GL
5	C, O	9150-00-189-6727	Lubricant, Drive Chain (OE/HDO-10)	QT
6	C, O	9150-00-150-0904	Lubricant, Grease, Automotive and Artillery	LB
7	C, O	6505-00-240-6328	Oil, Mineral	GL
8	C, O	6850-00-664-5685	Solvent, Dry Cleaning, P-D-680	QT
			(BAKERY OVEN)	
1	C, O	9130-00-160-1818	Gasoline, Combat (MOGAS-TYPE I, 91-A)	BK
2	C, O	9150-00-190-0904	Grease, Automotive and Artillery	LB
3	C, O	9150-00-180-6290	Hydraulic Fluid, Non-Petroleum	GL
4	C, O	9150-00-735-1800	Lubricant Graphic Base (Used on Oven Chains)	LB
5	C, O	9150-00-231-2356	Lubricating Oil, General Purpose Preservative P-L-Medium (PL-M)	GL
6	C, O	9150-00-188-9865	Lubricating Oil, Internal Combustion Engine (OE/H DO-50)	GL

INDEX

INDEX

INDEX

By Order of the Secretary of the Army:

JOHN A. WICKHAM, JR.
General, United States Army
Chief of Staff

Official:

R. L. DILWORTH
Brigadier General, United States Army
The Adjutant General

DISTRIBUTION:
To be distributed in accordance with DA Form 12-25A, Operator Maintenance Requirements for Bakery Plant, Trailer Mounted, M-1945.

☆**U.S. GOVERNMENT PRINTING OFFICE: 1992-311-831 (60604)**

RECOMMENDED CHANGES TO EQUIPMENT TECHNICAL PUBLICATIONS

THEN...JOT DOWN THE DOPE ABOUT IT ON THIS FORM. CAREFULLY TEAR IT OUT, FOLD IT AND DROP IT IN THE MAIL.

SOMETHING WRONG WITH PUBLICATION

FROM: (PRINT YOUR UNIT'S COMPLETE ADDRESS)

DATE SENT

PUBLICATION NUMBER	PUBLICATION DATE	PUBLICATION TITLE

BE EXACT PIN-POINT WHERE IT IS

PAGE NO.	PARA-GRAPH	FIGURE NO.	TABLE NO.

IN THIS SPACE, TELL WHAT IS WRONG AND WHAT SHOULD BE DONE ABOUT IT.

PRINTED NAME, GRADE OR TITLE AND TELEPHONE NUMBER	SIGN HERE

DA FORM 1 JUL 79 2028-2

PREVIOUS EDITIONS ARE OBSOLETE.

P.S.--IF YOUR OUTFIT WANTS TO KNOW ABOUT YOUR RECOMMENDATION MAKE A CARBON COPY OF THIS AND GIVE IT TO YOUR HEADQUARTERS.

The Metric System and Equivalents

Linear Measure

1 centimeter = 10 millimeters = .39 inch
1 decimeter = 10 centimeters = 3.94 inches
1 meter = 10 decimeters = 39.37 inches
1 dekameter = 10 meters = 32.8 feet
1 hectometer = 10 dekameters = 328.08 feet
1 kilometer = 10 hectometers = 3, 280.8 feet

Weights

1 centigram = 10 milligrams = .15 grain
1 decigram = 10 centigrams = 1.54 grains
1 gram = 10 decigram = .035 ounce
1 decagram = 10 grams = .35 ounce
1 hectogram = 10 decagrams = 3.52 ounces
1 kilogram = 10 hectograms = 2.2 pounds
1 quintal = 100 kilograms = 220.46 pounds
1 metric ton = 10 quintals = 1.1 short tons

Liquid Measure

1 centiliter = 10 milliters = .34 fl. ounce
1 deciliter = 10 centiliters = 3.38 fl. ounces
1 liter = 10 deciliters = 33.81 fl. ounces
1 dekaliter = 10 liters = 2.64 gallons
1 hectoliter = 10 dekaliters = 26.42 gallons
1 kiloliter = 10 hectoliters = 264.18 gallons

Square Measure

1 sq. centimeter = 100 sq. millimeters = .155 sq. inch
1 sq. decimeter = 100 sq. centimeters = 15.5 sq. inches
1 sq. meter (centare) = 100 sq. decimeters = 10.76 sq. feet
1 sq. dekameter (are) = 100 sq. meters = 1, 076.4 sq. feet
1 sq. hectometer (hectare) = 100 sq. dekameters = 2.47 acres
1 sq. kilometer = 100 sq. hectometers = .386 sq. mile

Cubic Measure

1 cu. centimeter = 1000 cu. millimeters = .06 cu. inch
1 cu. decimeter = 1000 cu. centimeters = 61.02 cu. inches
1 cu. meter = 1000 cu. decimeters = 35.31 cu. feet

Approximate Conversion Factors

To change	*To*	*Multiply by*	*To change*	*To*	*Multiply by*
inches	centimeters	2.540	ounce-inches	Newton-meters	.007062
feet	meters	.305	centimeters	inches	.394
yards	meters	.914	meters	feet	3.280
miles	kilometers	1.609	meters	yards	1.094
square inches	square centimeters	6.451	kilometers	miles	.621
square feet	square meters	.093	square centimeters	square inches	.155
square yards	square meters	.836	square meters	square feet	10.764
square miles	square kilometers	2.590	square meters	square yards	1.196
acres	square hectometers	.405	square kilometers	square miles	.386
cubic feet	cubic meters	.028	square hectometers	acres	2.471
cubic yards	cubic meters	.765	cubic meters	cubic feet	35.315
fluid ounces	milliliters	29, 573	cubic meters	cubic yards	1.308
pints	liters	.473	milliliters	fluid ounces	.034
quarts	liters	.946	liters	pints	2.113
gallons	liters	3.785	liters	quarts	1.057
ounces	grams	28.349	liters	gallons	.264
pounds	kilograms	.454	grams	ounces	.035
short tons	metric tons	.907	kilograms	pounds	2.205
pound-feet	Newton-meters	1.356	metric tons	short tons	1.102
pound-inches	Newton-meters	.11296			

Temperature (Exact)

°F	Fahrenheit temperature	5/9 (after subtracting 32)	Celsius temperature	°C

PIN: 028434-000

This fine document...

Was brought to you by me:

Liberated Manuals -- free army and government manuals

Why do I do it? I am tired of sleazy CD-ROM sellers, who take publicly available information, slap “watermarks” and other junk on it, and sell it. Those masters of search engine manipulation make sure that their sites that sell free information, come up first in search engines. They did not create it... They did not even scan it... Why should they get your money? Why are not letting you give those free manuals to your friends?

I am setting this document FREE. This document was made by the US Government and is NOT protected by Copyright. Feel free to share, republish, sell and so on.

I am not asking you for donations, fees or handouts. If you can, please provide a link to liberatedmanuals.com, so that free manuals come up first in search engines:

<A HREF=http://www.liberatedmanuals.com/>Free Military and Government Manuals</A>

- Sincerely
  Igor Chudov
  http://igor.chudov.com/
- Chicago Machinery Movers