TECHNICAL MANUAL

OPERATOR'S, UNIT AND DIRECT SUPPORT MAINTENANCE MANUAL INCLUDING REPAIR PARTS AND SPECIAL TOOLS LIST FOR HEMTT TANKER AIRCRAFT REFUELING SYSTEM MODEL HTARS100

NSN: 4930-01-365-2771

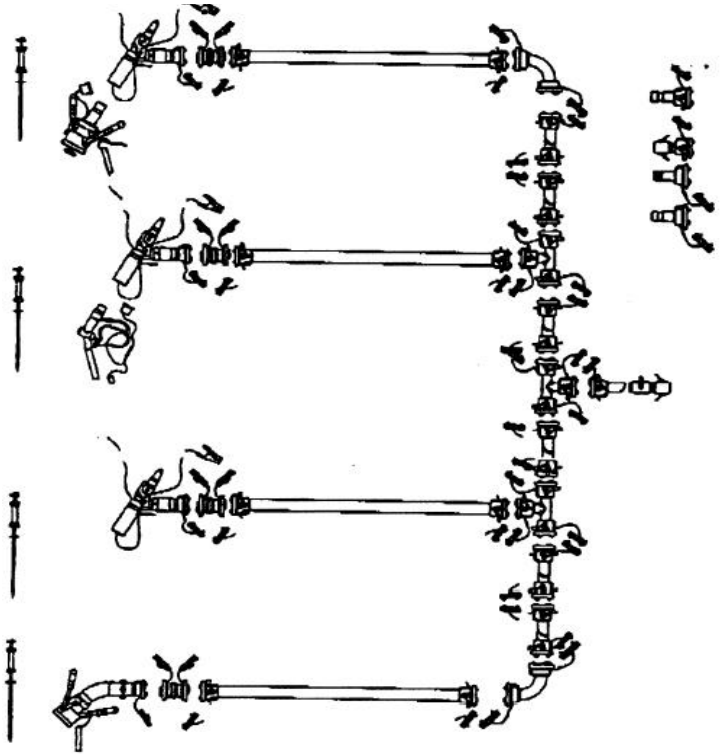

HEADQUARTERS, DEPARTMENT OF THE ARMY

28 FEBUARY 1994

CHANGE

NO. 6

HEADQUARTERS
DEPARTMENT OF THE ARMY
WASHINGTON. D.C. 30 November 1998

OPERATOR'S UNIT AND DIRECT SUPPORT
MAINTENANCE MANUAL INCLUDING REPAIR PARTS
AND SPECIAL TOOLS LIST

FOR

HEMTT TANKER AIRCRAFT REFUELING SYSTEM
MODEL HTARS100
NSN: 4930-01-365-7771
AND
MODEL HTARS101
NSN: 4930-01-435-9019

DISTRIBUTION STATEMENT A: Approved for public release; distribution is unlimited TM 10-4930-247-13&P, 28 February 1994 is changed as follows:

1. Retain this sheet in front of manual for reference purposes.
2. New or changed text material is indicated by a vertical bar in the margin.
3. An illustration change is indicated by a miniature pointing hand.
4. Remove and insert pages as indicated below.

Remove Pages	Insert Pages
i through 1-0	i through iv
1-1 and 1-2	1-1 and 1-2
1-7 through 1-10	1-7 through 1-10
2-9 and 2-10	2-9 and 2-10
2-29 and 2-30	2-29 and 2-30
2-37 through 2-40	2-37 through 2-40
2-45 and 2-46	2-45 and 2-46
3-1 and 3-2	3-1 and 3-2
3-9 through 3-12	3-9 through 3-12
4-1 and 4-2	4-1 and 4-2
4-21 through 4-26	4-21 and 4-26
B-3 and B-4	B-3 and B-4
C-1 and C-2	C-1 and C-2
C-5 and C-6	C-5 and C-6
C-25 through C-28	C-25 and C-28

Remove Pages	Insert Pages
C-55 and C-56	C-55 and C-56
C-61 through C-70	C-61 through C-70
C-73 and C-74	C-73 and C-74
C-81 and C-82	C-81 and C-82
D-1 through D-4	D-1 through D-4
Index-1 and Index-2	Index-1 and Index-2
DA Form 2028's	DA Form 2028's

By order of the Secretary of the Army:

DENNIS J. REIMER
General, United States Army
Chief of Staff

Official:

JOEL B. HUDSON
Administrative Assistant to the
Secretary of the Army
05343

DISTRIBUTION: To be distributed in accordance with the Initial Distribution Number (IDN) 256125, requirements for TN 10-4930-247-13&P.

URGENT

TM 10-4930-247-13&P
C5

CHANGE

NO. 5

HEADQUARTERS
DEPARTMENT OF THE ARMY
WASHINGTON, D.C.. 16 July 1997

OPERATOR'S, UNIT AND DIRECT SUPPORT
MAINTENANCE MANUAL INCLUDING REPAIR PARTS
AND SPECIAL TOOLS LIST

FOR

HEMTT TANKER AIRCRAFT REFUELING SYSTEM
MODEL HTARS100
NSN: 4930-01-365-2771
AND
MODEL HTARS101
NSN: 4930-01-435-9019

DISTRIBUTION STATEMENT A: Approved for public release; distribution is unlimited

TM 10-4930-247-13&P, 28 February 1994, is changed as follows:

1. Remove and insert pages as indicated below. New or changed text material is indicated by a vertical bar in the margin. An illustration change is indicated by a miniature pointing hand.

Remove pages	Insert pages
2-29 and 2-30	2-29 and 2-30
2-33 through 2-38	2-33 through 2-38
2-41 and 2-42	2-41 and 2-42
2-45 and 2-46	2-45 and 2-46

2. Retain this sheet in front of manual for reference purposes.

URGENT

By Order of the Secretary of the Army:

DENNIS J. REIMER
General, United States Army
Chief of Staff

Official:

JOEL B. HUDSON
Administrative Assistant to the
Secretary of the Army
03648

DISTRIBUTION:
To be distributed in accordance with DA Form 12-25-E, block no. 6125, requirements for TM 10-4930-247-13&P.

CHANGE

NO. 4

HEADQUARTERS
DEPARTMENT OF THE ARMY
WASHINGTON, D.C., 15 November 1996

OPERATOR'S, UNIT AND DIRECT SUPPORT
MAINTENANCE MANUAL INCLUDING REPAIR PARTS
AND SPECIAL TOOLS LIST

FOR

HEMTT TANKER AIRCRAFT REFUELING SYSTEM
MODEL HTARS100
NSN: 4930-01-365-2771
AND
MODEL HTARS101
NSN: 4930-01-435-9019

DISTRIBUTION STATEMENT A: Approved for public release; distribution is unlimited.

TM 10-4930-247-13&P, 28 February 1994, is changed as follows:

1. Title is changed as shown above.

2. Remove and insert pages as indicated below. New or changed text material is indicated by a vertical bar in the margin. An illustration change is indicated by a miniature pointing hand.

Remove pages	Insert pages
i and ii	i and ii
1-1 through 1-4	1-1 through 1-4
1-7 through -10	1-7 through 1-10
2-1 and 2-2	2-1 and 2-2
2-9 through 2-19/(2-20 Blank)	2-9 through 2-19/(2-20 Blank)
2-27 through 2-30	2-27 through 2-30
2-33 through 2-36	2-33 through 2-36
2-45 through 2-48	2-45 through 2-48
4-1 and 4-2	4-1 and 4-2
4-7 through 4-10	4-7 through 4-10
-- --	4-10.1 through 4-10.4
4-11 through 4-16	4-11 through 4-16
4-37 through 4-40	4-37 through 4-40
4-47 through 4-50	4-47 through 4-50

Remove pages	Insert pages
5-1 and 5-2	5-1 and 5-2
-- --	5-2.1 through 5-2.4
5-3 through 5-6	5-3 through 5-6
-- --	5-6.1/(5-6.2 Blank)
5-7 and 5-8	5-7 and 5-8
-- --	5-8.1 and 5-8.2
5-9 and 5-10	5-9 and 5-10
C-1 and C-2	C-1 and C-2
C-5 through C-8	C-5 through C-8
C-13 through C-18	C-13 through C-18
-- --	C-18.1 through C-18.14
(C-31 Blank)/C-32 through C-34	(C-31 Blank)/C-32 through C-34
-- --	C-34.1 through (C-34.3 Blank)/C-34.4
C-37 through C-40	C-37 through C-40
C-43 and C-44	C-43 and C-44
-- --	C-44.1 through C-44.4
C-45 and C-46	C-45 and C-46
C-55 through C-71 /(C-72 Blank)	C-55 through C-72
-- --	C-73 through C-90
F-1 and F-2	F-1 and F-2
J-1 and J-2	J-1 and J-2
Cover	Cover

3. Retain this sheet in front of manual for reference purposes.

By Order of the Secretary of the Army:

DENNIS J. REIMER
General, United States Army
Chief of Staff

Official:

JOEL B. HUDSON
Administrative Assistant to the
Secretary of the Army
02984

DISTRIBUTION:
To be distributed in accordance with DA Form 12-25-E, block no. 6125, requirements for TM 10-4930-247-13&P.

URGENT

TM 10-4930-247-13&P
C3

CHANGE

NO. 3

HEADQUARTERS
DEPARTMENT OF THE ARMY
WASHINGTON, D.C., 15 July 1995

OPERATOR'S, UNIT, AND
DIRECT SUPPORT MAINTENANCE MAUAL
INCLUDING REPAIR PARTS AND SPECIAL TOOLS LIST

FOR

HEMTT TANKER AIRCRAFT REFUELING SYSTEM
MODEL HTARS100
NSN: 4930-01-365-2771

DISTRIBUTION STATEMENT A: Approved for public release; distribution is unlimited

TM 10-4930-247-13&P, 28 February 1994, is changed as follows:

1. Remove and insert pages as indicated below. New or changed text material is indicated by a vertical bar in the margin. An illustration change is indicated by a miniature pointing hand.

Remove pages	Insert pages
2-13 and 2-14	2-13 and 2-14
2-23 and 2-24	2-23 and 2-24

2. Retain this sheet in front of manual for reference purposes.

By Order of the Secretary of the Army:

DENNIS J. REIMER
General, United States Army
Chief of Staff

Official:

JOEL B. HUDSON
Acting Administrative Assistant to the
Secretary of the Army
00612

DISTRIBUTION:
To be distributed in accordance with DA Form 12-25-E, block no. 6125, requirements for TM 10-4930-247-13&P.

URGENT

CHANGE

NO. 2

HEADQUARTERS
DEPARTMENT OF THE ARMY
WASHINGTON, D.C. 17 FEBRUARY 1995

Operator's, Unit, and Direct Support
Maintenance Manual
Including Repair Parts and Special Tools List
for

HEMTT TANKER AIRCRAFT REFUELING SYSTEM
MODEL HTARS100
NSN: 4930-01-365-m1

DISTRIBUTION STATEMENT A: Approved for pubic release; distribution is unlimited

TM 10-4930-247-13&P, 28 February 1994, is changed as follows:

1. Remove and insert pages as indicated below. New or changed text material is indicated by a vertical bar in the margin. An illustration change is indicated by a miniature pointing hand.

Remove pages	Insert pages
1-3 through 1-6	1-3 through 1-6

2. Retain this sheet in front of manual for reference purposes.

By Order of the Secretary of the Army:

GORDON R. SULLIVAN
General, United States Army
Chief of Staff

MILTON H. HAMILTON
Administrative Assistant to the
Secretary of the Army
08055

DISTRIBUTION:
To be distributed in accordance with DA Form 12-25-E, block no. 6125, requirements for TM 10-4930-247-13&P.

CHANGE

NO. 1

HEADQUARTERS
DEPARTMENT OF THE ARMY
WASHINGTON, D.C., 29 APRIL 1994

Operator's, Unit and Direct Support
Maintenance Manual
Including Repair Parts and Special Tools List
For
HEMTT TANKER AIRCRAFT REFUELING SYSTEM
MODEL HTARS100
NSN: 4930-01-365-2771

DISTRIBUTION STATEMENT A: Approved for public release; distribution is unlimited.

TM 10-4930-247-13&P, 28 February 1994, is changed as follows:

1. Remove and insert pages as indicated below. New or changed text material is indicated by a vertical bar in the margin. An illustration change is indicated by a miniature pointing hand.

Remove pages	Insert pages
C-1/(C-2 blank)	C-1 through C-71/(C-72 blank)

2. Retain this sheet in front of manual for reference purposes.

By Order of the Secretary of the Army:

GORDON R. SULLIVAN
General, United States Army
Chief of Staff

MILTON H. HAMILTON
Administrative Assistant to the
Secretary of the Army
06731

DISTRIBUTION:
To be distributed in accordance with DA Form 12-25-E, block no. 6125, requirements for TM 10-4930-247-13&P.

WARNINGS

Pay particular attention to specific WARNINGS AND CAUTIONS throughout this manual. DEATH or serious injury may result if personnel fail to observe safety precautions.

Do not touch cold metal parts with bare hands when operating under arctic conditions. Frostbite can cause permanent injury.

Lifting or moving heavy equipment incorrectly can cause serious injury. Do not try to lift or move more than 50 pounds by yourself. Get an assistant. Bend legs while lifting. Do not support weight with your back.

DEATH or serious injury may result if personnel fail to observe the following safety precautions.

FLAMMABLE FUEL

- Do not breathe fuel vapors. Vapors are toxic and can cause serious illness or death. If dizziness occurs, leave area and get fresh air.
- Before operation be certain all system components are securely connected to avoid fuel spills. If fuel spill occurs, cover the area with dry soil to reduce rate of vaporization. During operation avoid fuel spills as much as possible. Be certain a suitable fire extinguisher is charged and readily available in case of fire.
- Fuel vapors are extremely flammable. Do not allow smoking within 100 feet of the fuel servicing areas. Post NO SMOKING signs around the areas. Do not operate system or components near open flame or excessive heat. Death or personnel injury could result from exploding or burning fuel. Be certain a suitable and properly charged fire extinguisher is available at all times.

SOLVENT HAZARD

- Drycleaning solvent, P-D-680, Type III, used to clean parts, is potentially dangerous to personnel and property. Eye protection required. Avoid repeated and prolonged skin contact by wearing rubber or nonporous gloves when handling solvents or material wet with drycleaning solvent. Wash hands immediately after exposure with soap and water and use a lanolin based skin cream to prevent skin drying.
- Do not use near open flame or excessive heat. Do not work with solvent in a closed room. Be sure there is good ventilation or the solvent vapors will build up in the air and become a poisonous mixture which can cause physical injury or even death.
- Do not breathe dry cleaning solvent vapors for long periods of time or allow solvent to come into contact with skin for an extended time. DO NOT use solvent near open flames or excessive heat.

STATIC DISCHARGE

- Static discharge could ignite the fuel or cause an explosion of the fuel vapor. Do not operate the system until properly grounded.
- Be certain the nozzles are properly bonded to the vehicle being filled. The vehicle being filled and the dispensing pump must be grounded.

ARCING

- Radio transmitters can cause an arc at antennas. Do Not ground equipment to a radio antenna.

WARNINGS - cont.

FUEL SPILLS ON PERSONNEL

- Avoid getting fuel on your body or clothing. If clothing becomes saturated with fuel, remove clothing immediately and wash your body with hot soapy water.
- Wear protective goggles and refuel only in well-ventilated area. Use fuel resistant gloves when handling system components due to toxic effects of some fuel additives. Avoid contact with skin, eyes, and clothes. If fuel contacts eyes, flush eyes with clean fresh water and get medical attention immediately.

FIRST AID

FIRST AID instructions are given in FM 21-11, First Aid For Soldiers.

TECHNICAL MANUAL

NO: 10-4930-247-13&P

HEADQUARTERS
DEPARTMENT OF THE ARMY
Washington, D.C. 28 February 1994

OPERATOR'S, UNIT AND DIRECT SUPPORT MAINTENANCE MANUAL INCLUDING REPAIR PARTS AND SPECIAL TOOLS LIST for HEMTT TANKER AIRCRAFT REFUELING SYSTEM MODEL HTARS100 NSN: 4930-01-365-7771 and MODEL HTARS101 NSN: 4930-01-435-9019

REPORTING ERRORS AND RECOMMENDING IMPROVEMENTS

You can improve this manual. If you find any mistakes, or if you know of a way to improve the procedures. please let us know. Mail your letter, DA form 2028 (Recommended Changes to Publications and Blank Forms), or DA Form 2028-2, located in the back of this manual direct to: Commander, U.S. Army Tank-automotive and Armaments Command, ATTN: AMSTA-AC-NML, Rock Island, IL 61299-7630. A reply will be furnished to you. You may also provide DA Form 2028-2 information to TACOM via datafax or e-mail: TACOM's fax number is DSN 786-6323, TACOM's e-mail address is tacom-tech-pubs @ cc.tacom.army.mil

TABLE OF CONTENTS

TABLE OF CONTENTS - cont

HOW TO USE THIS MANUAL

Be sure to read all Warnings before using your equipment.

This manual incorporates a quick reference tab feature that allows you to quickly locate the most often referenced subjects and topics appearing in this manual. The reference tab feature is comprised of the following components:

Cover Page Index
Index boxes are located on the right-hand edge of the cover page. Each index box contains a subject title, page number, and black index tab.

Table of Contents
The Table of Contents lists all the major subjects contained in this manual. Subjects that are surrounded by a black box correspond to those that appear on the cover page index.

Page Numbers and Index Tabs
Each page of this manual is identified with a page number. Pages that contain the subjects identified on the cover page index also contain a black tab on the right edge of the page that alines with the cover page index tab

To use the quick reference tab feature, select the title of the subject you are trying to find from the cover page index. You can turn to the indicated page number or bend the pages back and locate the page tab that alines with the cover index tab.

If the cover page is lost or badly worn, page numbers and index tabs can be located by referring to the Table of Contents.

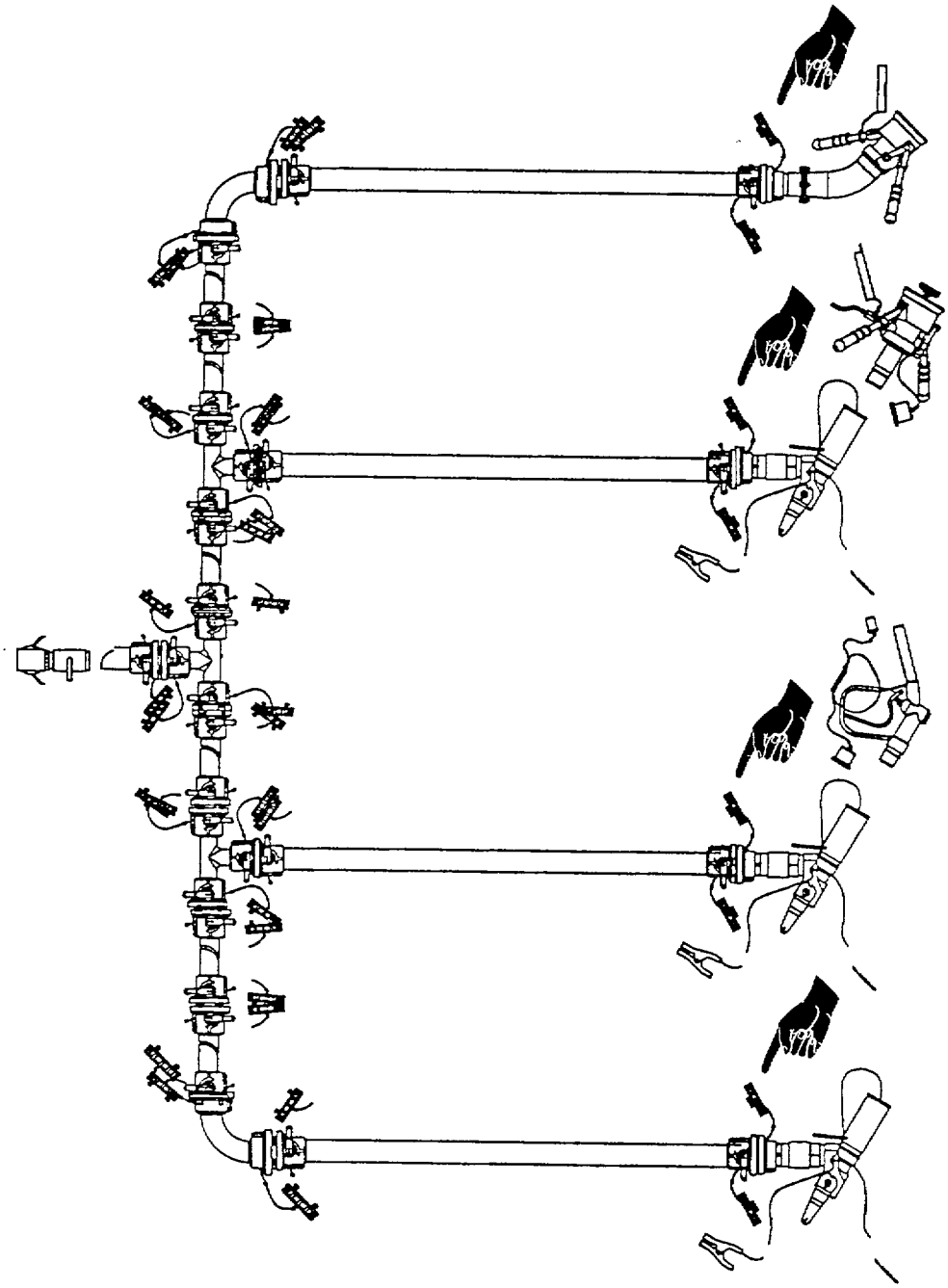

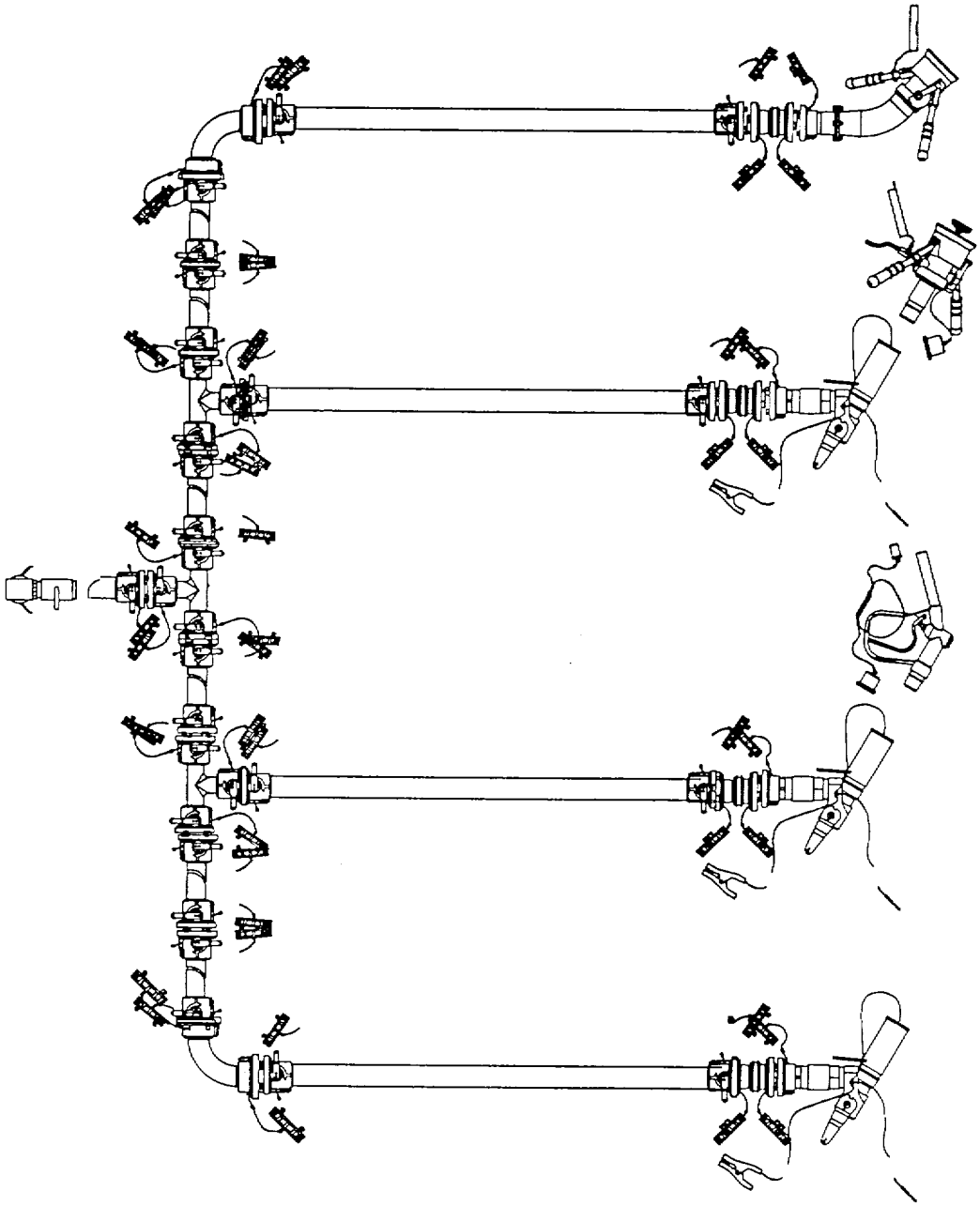

CHAPTER 1

INTRODUCTION

Section I. GENERAL INFORMATION

1-1. SCOPE.

This manual contains Operating instructions, Unit maintenance and Direct Support maintenance procedures required to operate and maintain the HEMTT Tanker Aircraft Refueling System (HTARS) The purpose of the HTARS is to distribute and control fuel flow from the HEMTT tanker to the aircraft being refueled. The HTARS consists of tees, elbows, adapters, lightweight hoses, and nozzles required to set up a four station aircraft refueling system.

1-2. MAINTENANCE FORMS, RECORDS, AND REPORTS.

Department of the Army forms and procedures used for equipment maintenance will be those prescribed by DA Pam 738-750 (The Army Maintenance Management System (IAMMST)).

1-3. CORROSION PREVENTION AND CONTROL.

a. Corrosion Prevention and Control (CPC) of Army Materiel is a continuing concern. It is important that any corrosion problems with this item be reported so that the problem can be corrected and improvements can be made to prevent the problem in future items.

1-3. CORROSION PREVENTION AND CONTROL - cont.

b. While corrosion is typically associated with rusting of metals, it can also include deterioration of other materials, such as rubber and plastic. Unusual cracking, softening, swelling or breaking of the materials may be a corrosion problem.

c. If a corrosion problem is identified, it can be reported using Standard Form 368, Product Quality Deficiency Report. Using key words such as "rust", "deterioration", or "cracking" will insure that the information is identified as a CPC problem. The form should be submitted to the address specified in DA Pam 738-750.

1-4. DESTRUCTION OF ARMY MATERIEL TO PREVENT ENEMY USE.

Methods and procedures for destruction of Army materiel to prevent enemy use are covered in TM 750-244-3.

1-5. REPORTING EQUIPMENT IMPROVEMENT RECOMMENDATIONS (EIRs).

If your HTARS needs improvement, let us know. Send us an EIR. You, the user, are the only one who can tell us what you don't like about your equipment. Let us know why you don't like the design or performance. Put it on an SF 368 (Quality Deficiency Report). Mail it to us at: Commander, U.S. Army Tank-automotive and Armaments Command, ATTN: AMSTA-TR-E/MPA Warren, MI 48397-5000. We'll send you a reply.

1-6. NOMENCLATURE CROSS REFERENCE LIST.

Common Name	Official Nomenclature
CCR Nozzle	Closed Circuit Refueling Nozzle
Refueling System	HEMTT Tanker Aircraft Refueling System

1-7. LIST OF ABBREVIATIONS.

Abbreviation	Nomenclature
K	Kilo (Thousand)
°F	Degrees Fahrenheit
TM	Technical Manual
HEMTT	Heavy Expanded Mobility Tactical Truck
HTARS	HEMTT Tanker Aircraft Refueling System

1-8. GLOSSARY.

Term	Description
Interchangeable	Two or more like parts with the same Function and features that can be exchanged one for the other without changing parts or selecting size to obtain correct fit.

1-8A. DIFFERENCES BETWEEN MODELS.

There are two models of the HTARS covered in this manual, Model HTARS100 and Model HTARS101. Major differences between the two models are listed below and are described in subsequent paragraphs. Operating and Maintenance procedures appearing in this manual that are applicable to only one model are identified with the model designation appearing in the paragraph heading or procedural step. Procedures applicable to both models do not contain either designation.

Section II. EQUIPMENT DESCRIPTION AND DATA

1-9. EQUIPMENT CHARACTERISTICS, CAPABILITIES AND FEATURES.

a. Characteristics.

(1) Easily transportable. Hoses are coiled and components are stowed for transport by truck or aircraft.

(2) Daybreak and quick disconnect couplings allow rapid system assembly and disassembly in daylight and darkness.

(3) System can be configured to meet varying mission and site requirements.

(4) Operates over all types of terrain and hard surfaces, including sand, mud and asphalt.

(5) No external electrical power source required.

(6) Lightweight hose material.

(7) Ground rods provided for each refueling station.

b. Capabilities and Features.

(1) capacity of four aircraft refueling points. Each refueling point may be operated independently.

(2) ball valves on hoses, and tees, and elbows on Model HTARS101, control fuel flow. 1 Valves must be set to CLOSE position before hoses can be connected or disconnected. Valves permit repair, replacement and adjustment without removal of major assemblies.

(3) (Model HTARS101). A hose end regulator, built into the single point refueling nozzle (D1), controls fuel pressure to the aircraft during fueling operations.

(4) Three different nozzles are provided to adapt the system to various aircraft.

(5) Recirculation nozzle permits fuel to be circulated from the system back to the HEMTT tanker. A sampling port on the nozzle permits sampling during recirculation.

1-10. LOCATION AND DESCRIPTION OF MAJOR COMPONENTS.

Refer to figure 1-1.

The HTARS consists of hoses, nozzles, tees and elbows needed to connect the HEMTT tanker to the aircraft being refueled. The following paragraphs describe a typical fueling system. Your mission and operating environment may require connecting the components in a different configuration than the one shown. All components are interchangeable.

1-10. LOCATION AND DESCRIPTION OF MAJOR COMPONENTS - cont.

(1) (Model HTARS100) Elbows. Two elbows are supplied with the system and are installed to prevent sharp bends in the fuel hose. Each elbow is equipped with drylock couplings.

(Model HTARS101) Elbows. Two elbows are supplied with the system and are installed to prevent sharp bends in the fuel hose. Each elbow is equipped with drylock couplings and manually operated ball valves to control fuel flow through the elbow. Valves must be set to CLOSE position before connecting or disconnecting couplings. Valves are set to OPEN position during operation.

(2) 2-Inch Hose Assemblies. Ten 2-inch hose assemblies are used to connect components of the HTARS into four pumping stations. Each hose is 50 feet long with drylock couplings at both ends. Each coupling is equipped with a manually operated ball valve to control fuel flow through the hose. Valves must be set to CLOSE position before connecting or disconnecting couplings. Valves are set to OPEN position during operation. The hose assemblies incorporate internal ground wires that are built into the hose material.

(3) DELETED.

(4) (Model HTARS100) Single Point Refueling Nozzle (Type D1). Four D1 nozzles are supplied with HTARS for refueling aircraft with pressurized fuel systems. The D1 nozzles are non-regulating, so fuel pressure must be controlled by the HEMTT tanker. The nozzle is internally grounded through the fuel hose. (Model HTARS101) Single Point Refueling Nozzle (Type D1). Four Dl nozzles are supplied with HTARS for refueling aircraft with pressurized fuel systems. The D1 nozzle incorporates a pressure regulator designed to limit maximum fuel pressure to 45 psi. A coarse screen inside the drylock coupling prevents large particles of contamination from entering the aircraft fuel system. The D1 nozzle is internally grounded through the fuel hose.

(5) Ground Rods. Four ground rods are supplied, one for each refueling point. The ground rods incorporate a built-in slide hammer to aid installation and removal.

(6) Closed Circuit Refueling (CCR) Nozzle. Four CCR nozzles are supplied with the HTARS. The CCR nozzle locks onto the aircraft refueling adapter and regulates fuel pressure to the aircraft. An automatic shutoff stops fuel flow when the nozzle is disconnected. Each nozzle is supplied with a ground clamp and plug for electrical bonding of the nozzle to the aircraft. The CCR nozzle can be used to refuel aircraft with gravity feed fuel tanks by connecting the open port nozzle to the fuel discharge coupling. The CCR nozzle is required to connect the recirculation nozzle to the HEMTT tanker.

(7) Port Nozzle. Four open port nozzles are supplied with the system for refueling gravity-fill type fuel tanks and containers. The open port nozzle must be connected to the CCR nozzle for operation.

(8) Recirculation Nozzle. One recirculation nozzle is supplied with HTARS. The recirculation nozzle is installed between the fuel system supply points and the HEMTT tanker to allow fuel to re-enter the tanker. The nozzle is equipped with a hand operated ball valve to allow sampling of fuel entering the tanker. Operation of the recirculation nozzle requires connection of the CCR nozzle.

(9) Tees. Three tees are supplied with the system. Each tee is equipped with drylock couplings and manually operated ball valves to control fuel flow through the tee. Valves must be set to CLOSE position before connecting or disconnecting couplings. Valves are set to OPEN position during operation.

1-10. LOCATION AND DESCRIPTION OF MAJOR COMPONENTS - cont.

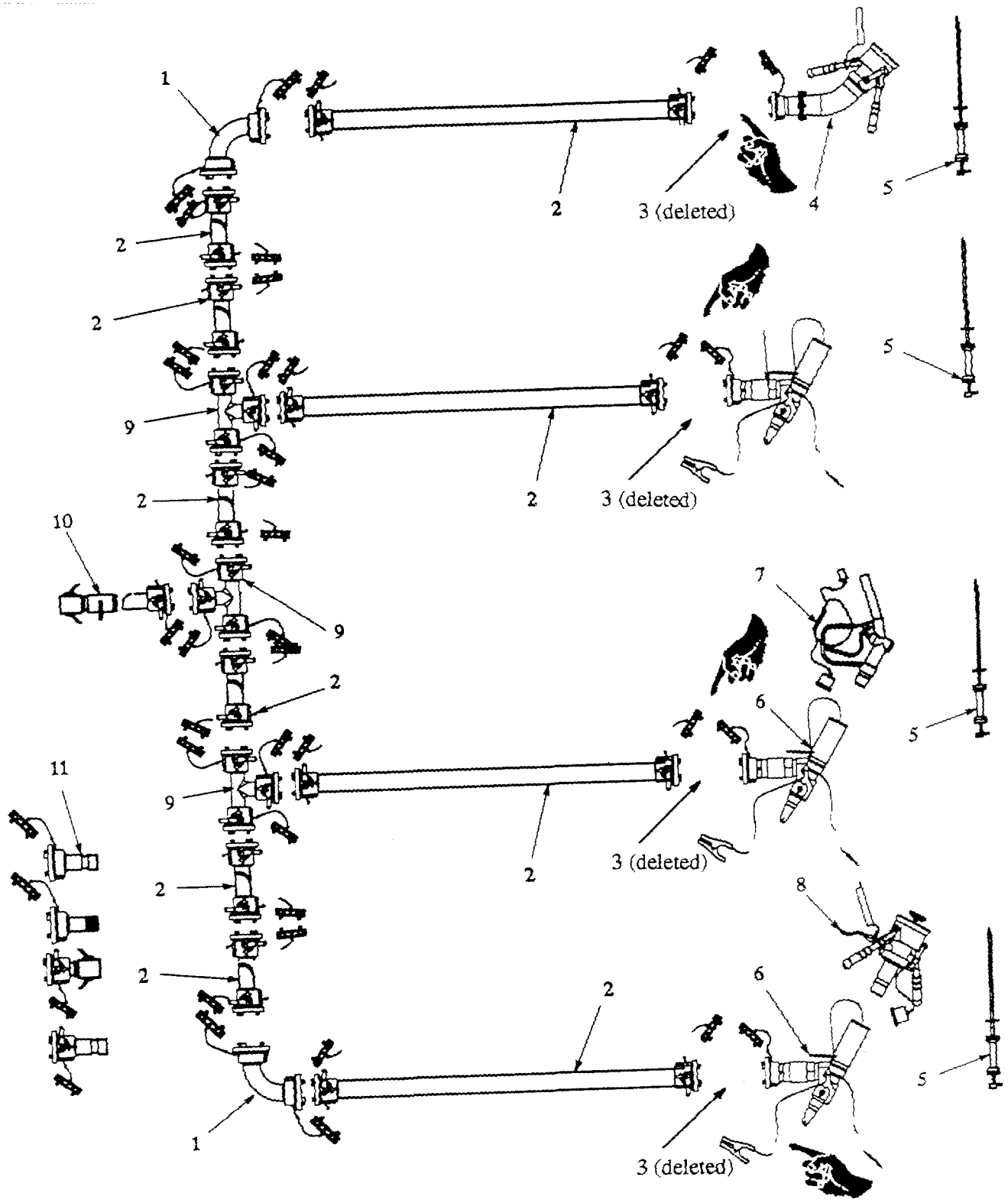

Figure 1-1. HEMTT Tanker Aircraft Refueling System.

1-10. LOCATION AND DESCRIPTION OF MAJOR COMPONENTS - cont.

(10) 3-Inch Hose Assembly. One 3-inch hose assembly connects the HTARS to the HEMTT tanker. The hose is 50 feet long with a three inch female quick disconnect coupling at one end and a 2-inch drylock coupling on the other. A ball valve is mounted in line at the quick disconnect coupling. The hose assembly has an internal ground wire that is built into the hose material.

(11) Adapters. Four types of adapters are supplied with the HTARS to allow connection of non-system components. Use of these adapters will depend on your operating requirements and equipment available.

*U.S. GOVERNMENT PRINTING OFFICE : 1997 0 - 418-292 (67290)

1-11. EQUIPMENT DATA.

The following table provides information pertaining to the single point refueling nozzle (D1), CCR nozzle, tee, recirculation nozzle and open port nozzle.

Table 1-1. Equipment Data

SINGLE POINT REFUELING NOZZLE (D1)	
Length	17 in.
Width (across handles)	13 in.
Height	11 in.
Coupling	2 in. drylock

NOTE
For additional equipment data on the CCR nozzle, refer to TM10-4930-248-13&P.

CCR NOZZLE	
Length	16 in.
Width	6 in.
Height	11 in.
Weight	8.5 lbs.
Coupling	2 in. drylock
TEE	
Length	12.5 in.
Width	9 in.
Height	4.5 in,
Coupling	2 in. drylock with valve
RECIRCULATION NOZZLE	
Length	12 in.
Width (across handles)	13 in.
Height	7in.
Coupling	self sealing poppet
Sample port	hand operated ball valve
OPEN PORT NOZZLE	
Length	18 in.
Width	2.5 in.
Height	11 in.
Coupling	self-sealing poppet

Section III. PRINCIPLES OF OPERATION

1-12. SYSTEM TECHNICAL PRINCIPLES OF OPERATION.

a. General. The HEMTT Tanker Aircraft Refueling System (HTARS) described in this manual is configured for the maximum number of refueling points. Your mission and operating requirements will determine how many of the system components must be connected and in what configuration. The type of fuel nozzle used at each refueling point will be determined by the type of aircraft being refueled.

b. Fuel Distribution and Control. (Refer to figure 1-2) Fuel required to operate the HTARS is supplied by the HEMTT tanker and distributed through the 3-inch supply hose to the network of 2-inch hoses, tees and elbows that make up the four refueling points. Fuel flow through the system is controlled by opening or closing the valves located on each hose and tee coupling. In the event of a fuel leak, the defective component can be isolated by closing the nearest upstream and downstream coupling valves. Once isolated, the defective component can be replaced without interrupting fuel flow through the remaining refueling points.

c. **DELETED**

d. Closed Circuit Refueling (CCR) Nozzle. The CCR nozzle is a hand operated refueling nozzle that controls system fuel pressure to prevent over filling and over-pressurizing of the aircraft fuel system. The vehicle adapter on the outlet end of the nozzle contains an orifice sized to provide a predetermined fuel flow rate.

The CCR nozzle is operated manually by moving the control handle to CLOSE or OPEN position. When set to CLOSE, an internal poppet is seated, shutting off fuel flow. Fuel flow is initiated by setting the control handle to the OPEN position. This unlocks the internal valve poppet and diaphragm allowing the fuel regulator to start fuel flow. Fuel supply pressure exerts a force on an internal diaphragm assembly. This force is balanced by a calibrated regulator spring to maintain a valve opening which provides a nominal discharge flow of 15 to 125 psig.

A flow indicator, located on the back of the nozzle housing, provides a visual indication that the nozzle valve is closed. When the refueled tank is full, the pressure difference at the nozzle outlet is reduced to zero, fuel flow ceases and the red indicator will extend. Before removal from the aircraft, the nozzle handle should be returned to the CLOSE position. The nozzle is disconnected from the aircraft by pulling back on the nozzle collar. If, in an emergency situation, the nozzle is not returned to the closed position before removal, the dry quick disconnect action of the nozzle will close an internal valve and automatically cut off fuel flow. When operated with the open port or recirculation nozzles, the CCR nozzle regulates fuel pressure to 15 psi.

For additional information on the CCR nozzle, refer to TM10-4930-248-13&P.

1-12. SYSTEM TECHNICAL PRINCIPLES OF OPERATION - cont.

e. Open Port Nozzle. The open port nozzle is used to refuel aircraft having gravity feed, non-pressurized fuel systems. The nozzle is inserted into the aircraft fuel tank neck and filled by squeezing the nozzle control lever. The open port nozzle must be connected to the CCR nozzle for operation. The pressure regulating feature of the CCR nozzle limits fuel pressure through the open port nozzle to 15 psi.

f. (Model HTARS100) Single Point Refueling Nozzle (D1). The D1 nozzle is used to refuel pressurized aircraft fuel systems. Fuel pressure through the D1 nozzle is regulated by the HEMTT tanker. The D1 nozzle is connected to the aircraft by mating the nozzle adapter against the aircraft adapter and rotating the nozzle handles until the connection is firmly locked. Setting the control lever to the OPEN position unseats an internal poppet and allows fuel flow through the nozzle. Mechanical locks prevent the nozzle from being disconnected while the control lever is set to OPEN. When the nozzle is disconnected, mechanical locks retain the control lever in the CLOSE position to prevent accidental fuel spills.

g. (Model HTARS101) Single Point Refueling Nozzle (D1). The D1 nozzle is used to refuel pressurized aircraft fuel systems. Fuel pressure through the D1 nozzle is controlled by the built-in pressure regulator not to exceed 45 psi The D1 nozzle is connected to the aircraft by mating the nozzle adapter against the aircraft adapter and rotating the nozzle handles until the connection is firmly locked. Setting the control lever to the OPEN position unseats an internal poppet and allows fuel flow through the nozzle. Mechanical locks prevent the nozzle from being disconnected while the control lever is set to OPEN. When the nozzle is disconnected, mechanical locks retain the control lever in the CLOSE position to prevent accidental fuel spills. Clamp and pin type connectors are attached to the nozzle bonding cable.

h. Recirculation Nozzle. The recirculation nozzle is used to circulate fuel from the system fuel hoses back to the HEMTT tanker. The nozzle must be connected to the CCR nozzle to operate. Fuel pressure through the recirculation nozzle is regulated by the CCR nozzle to 15 psi. The recirculation nozzle is connected to the tanker by mating the nozzle adapter against the tanker adapter and rotating the nozzle handles until the connection is firmly locked. Setting the control lever to the OPEN position unseats an internal poppet and allows fuel flow through the nozzle. Mechanical locks prevent the nozzle from being disconnected while the control lever is set to OPEN. When the nozzle is disconnected, mechanical locks retain the control lever in the CLOSE position to prevent accidental fuel spills. A ball valve and tube are installed on the nozzle body to allow sampling of the recirculating fuel.

1-12. SYSTEM TECHNICAL PRINCIPLES OF OPERATION - cont.

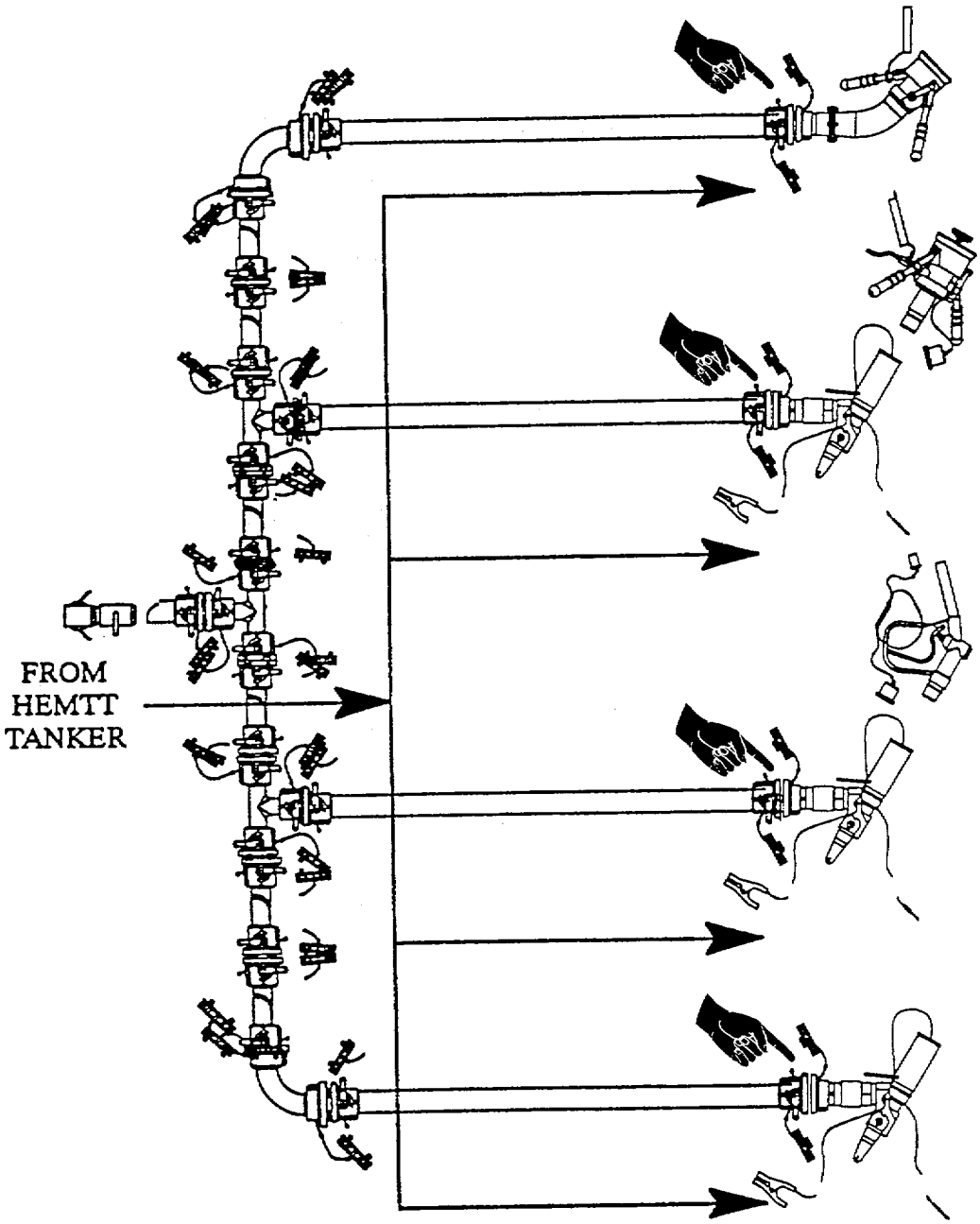

Figure 1-2. HTARS Flow Diagram.

CHAPTER 2

OPERATING INSTRUCTIONS

Section I. DESCRIPTION AND USE OF OPERATOR'S CONTROLS AND INDICATORS

This section provides the operator with information needed to locate, identify, and use the controls and indicators on the HEMTT Tanker Aircraft Refueling System (HTARS). The components and controls identified in this section are applicable to the entire system. Many of the controls are used repeatedly throughout the system.

Refer to the applicable technical manuals for specific operating information on the HEMTT Tanker.

2-1. SINGLE POINT REFUELING NOZZLE (D1).

Refer to figure 2-1.

Locking Handles (1).
Two locking handles on the nozzle body aid positioning and connection of the nozzle to the aircraft refueling adapter. The handles are turned to the right to connect the nozzle; left to disconnect.

Control Lever (2).
The control lever has two positions, OPEN and CLOSE. When the nozzle is connected to the aircraft refueling adapter, rotating the crank handle to OPEN allows fuel flow through the nozzle. When set to CLOSE, fuel flow is stopped. Mechanical locks prevent setting the crank handle to OPEN when the nozzle is not connected or disconnecting the nozzle before the lever is set to CLOSE.

(Model HTARS101) Breather (3).
Allows ambient air pressure to enter regulator valve. Excessive leakage from vent indicates worn or damaged internal components.

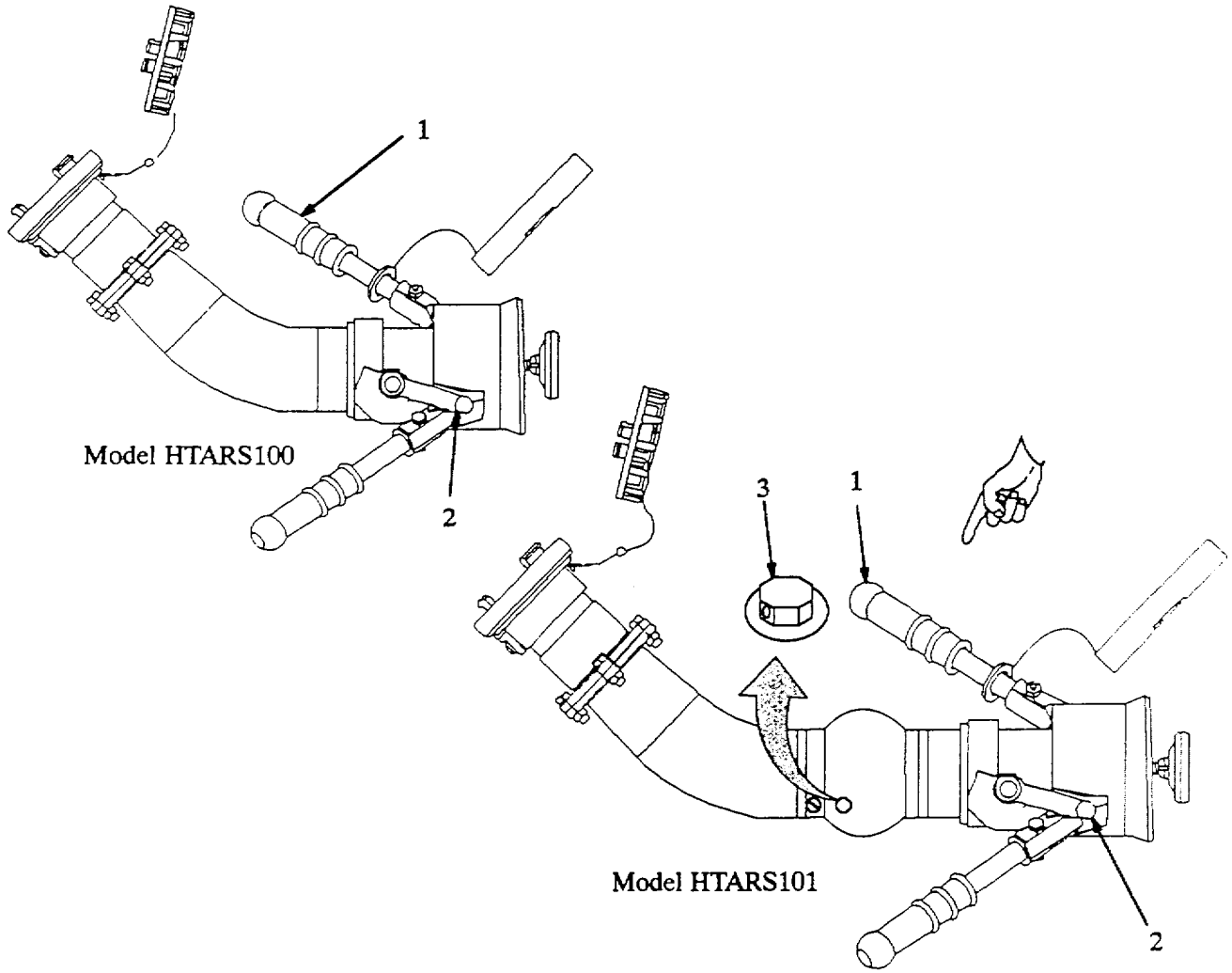

Figure 2-1. Single Point Refueling Nozzle (D1) Controls.

2-2. RECIRCULATION NOZZLE.

Refer to figure 2-2.

Locking Handles (1).
Two locking handles on the nozzle body aid positioning and connection of the nozzle to the HEMTT tanker refueling adapter. The nozzle is positioned on the tanker refueling adapter and the handles are turned to the right to connect the nozzle; left to disconnect.

Ball Valve (2).
The ball valve is used to take samples of fuel being recirculated in the HTARS. To obtain a fuel sample, turn the control handle to the left. When enough fuel has been obtained, turn control handle all the way to the right to stop fuel flow.

Control Lever (3).
The control lever has two positions, OPEN and CLOSE. When the nozzle is connected to the aircraft refueling adapter, rotating the crank handle to OPEN allows fuel flow through the nozzle. When set to CLOSE, fuel flow is stopped. Mechanical locks prevent setting the crank handle to OPEN when the nozzle is not connected or disconnecting the nozzle before the lever is set to CLOSE.

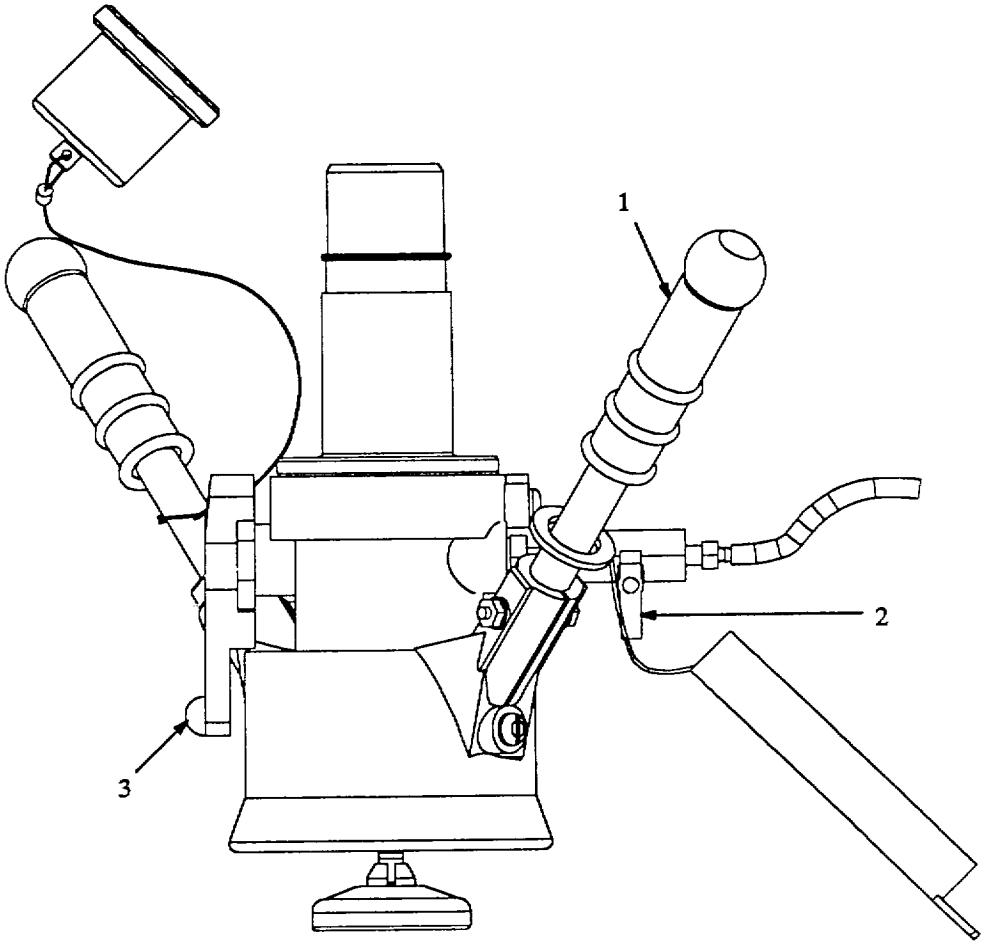

Figure 2-2. Recirculation Nozzle Controls.

2-3. OPEN PORT NOZZLE.

Refer to figure 2-3.

Control Handle (1).
The open port nozzle is operated by gripping the nozzle body and pulling up (squeezing) on the spring loaded control handle. Squeezing the handle opens an internal poppet valve and allows fuel flow through the nozzle. Releasing the handle stops fuel flow. The open port nozzle must be connected to and used with the CCR nozzle.

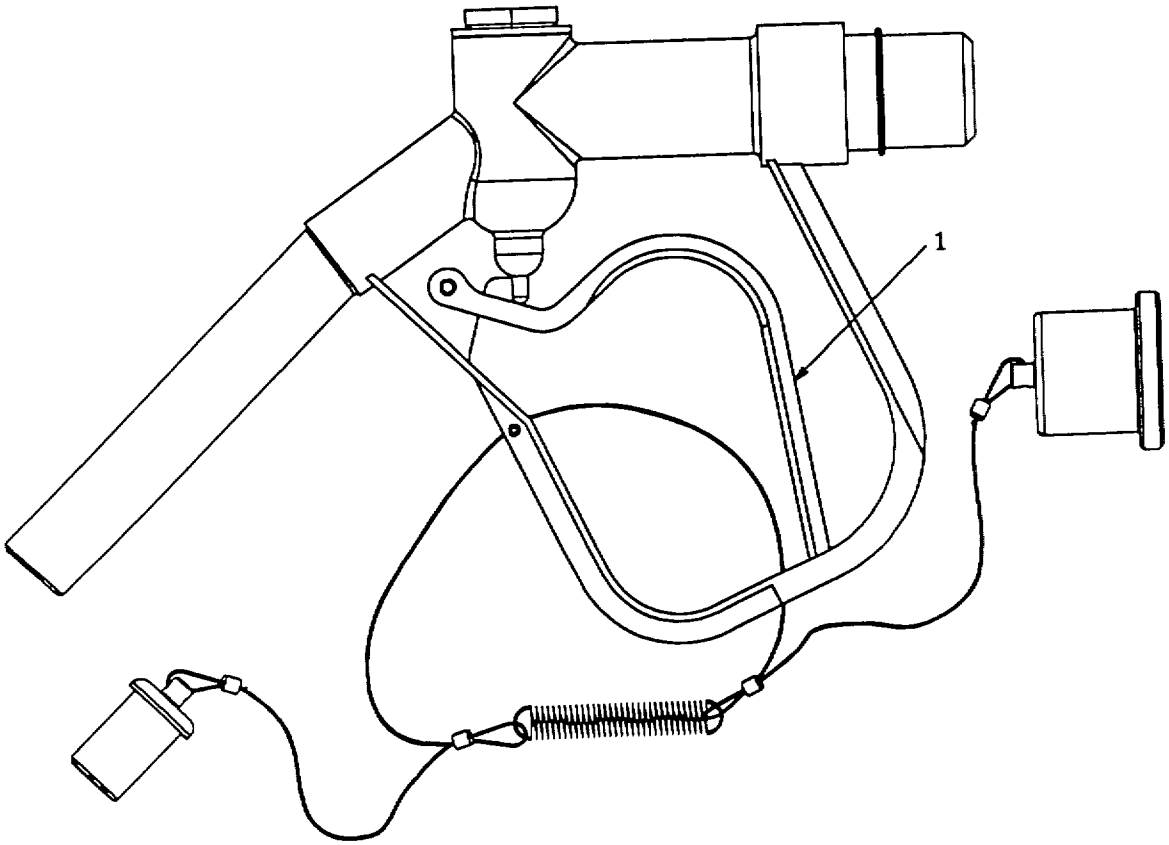

Figure 2-3. Open Port Nozzle Controls.

2-4. CLOSED CIRCUIT REFUELING (CCR)NOZZLE.

Refer to figure 2-4.

Quick-Disconnect Automatic Shutoff Coupler (Collar) (1).
Connects nozzle to aircraft refueling adapter. Pull back spring loaded collar to disconnect nozzle, Collar automatically moves forward to lock nozzle nozzle in place.

Flow Indicator (2).
Red indicator extends from back of nozzle body when fuel flow through the nozzle has stopped or handle has been moved to CLOSE position.

Handle (3).
Starts and stops fuel flow through the nozzle. The handle is held in the CLOSE position by a spring loaded latch (4). Depress latch and raise handle to OPEN position to allow fuel flow. Pull handle down to CLOSE position to stop fuel flow,

Latch (4).
Holds handle (3) in the CLOSE Position. Depress latch to release handle (3).

Refer to TM10-4930-248-13&P for addition information, description and use of the operator's controls and indicators on the CCR Nozzle.

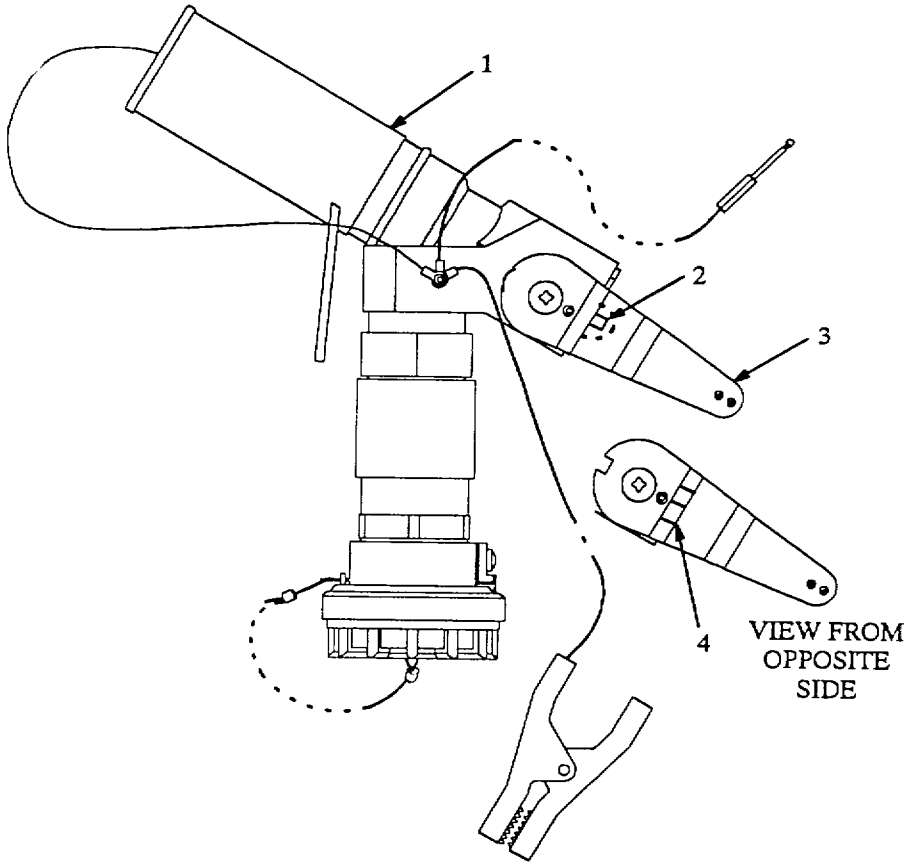

Figure 2-4. CCR Nozzle Controls and Indicators.

2-5. VALVED DRY BREAK COUPLINGS.

Refer to figure 2-5.

NOTE

Valved couplings are installed on fuel hoses, tees and some adapters. Operation and function of the valved couplings is the same for all applications.

Control Arm (1).
The control arm is attached to an internal ball valve that controls the flow of fuel through the valved dry break coupling. Moving the control arm to OPEN allows fuel to pass through the coupling. Moving control arm to CLOSE stops the flow of fuel. To operate the valved coupling, pull back on grip (2) and move control arm to desired position. Valved couplings cannot be disconnected unless control arms are set to CLOSE.

Grip (2).
The spring loaded grip operates a mechanical lock that secures the control arm (1) in the OPEN or CLOSE positions. Pull back the grip to release the lock.

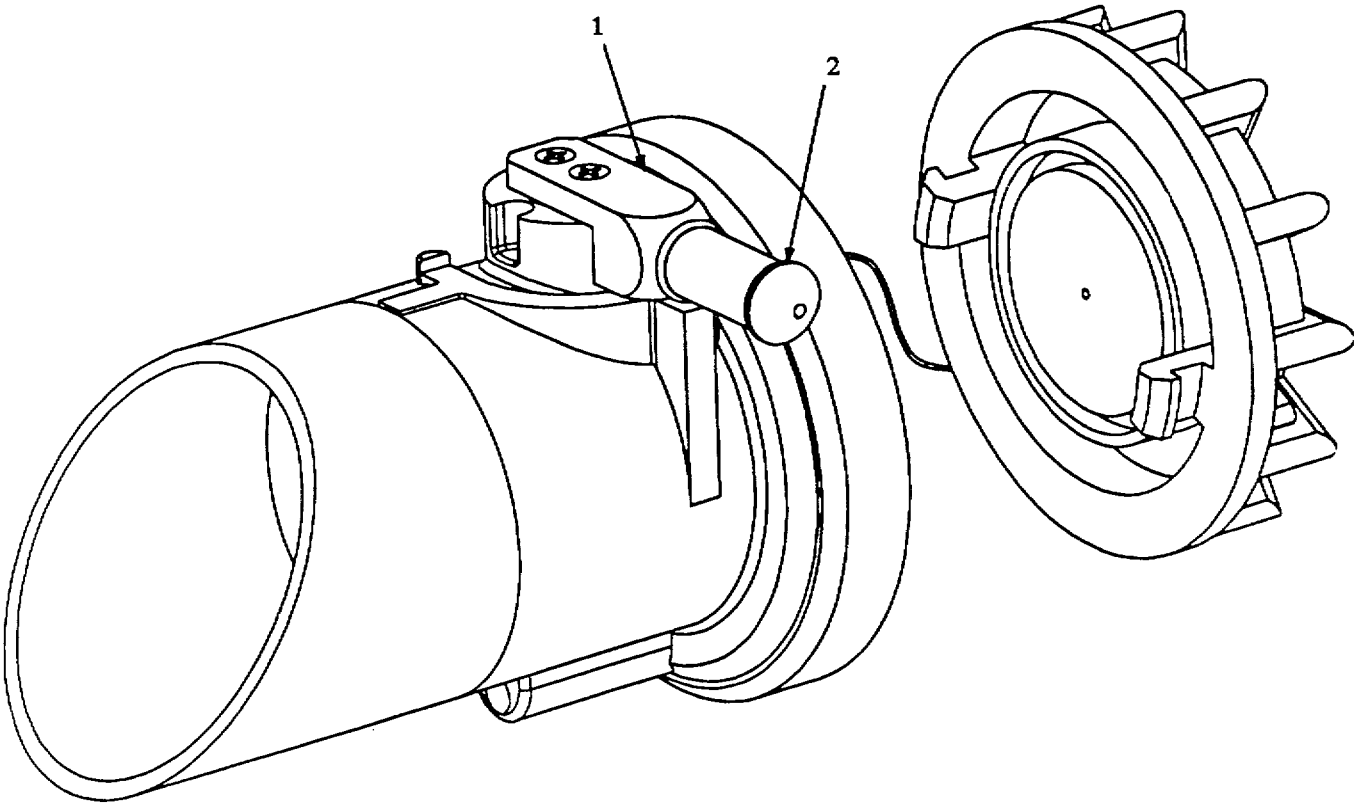

Figure 2-5. Valved Dry Break Coupling Controls.

Section II. OPERATOR PREVENTIVE MAINTENANCE CHECKS AND SERVICES (PMCS)

2-6. GENERAL.

Preventive Maintenance Checks and Services (PMCS) means systematic inspecting and servicing of equipment to keep it in good condition and to prevent breakdowns. As the operator of the HEMTT Tanker Aviation Refueling System (HTARS), your mission is to:

a. Be sure to perform your PMCS each time you operate the HTARS. Always do your PMCS in the same order, so it gets be a habit. Once you've had some practice, you'll quickly spot anything wrong.

b. Do your BEFORE (B) PMCS just before you operate the equipment. Pay attention to WARNINGs, CAUTIONs and NOTEs.

c. Do your DURING (D) PMCS while you operate the equipment. During operation means to monitor the equipment and its related components while it is actually being operated. Pay attention to WARNINGs, CAUTIONs and NOTEs.

d. Do your AFTER (A) PMCS right after operating your equipment. Pay attention to WARNINGs, CAUTIONs and NOTEs.

e. Use DA Form 2404 (Equipment Inspection and Maintenance Worksheet) to record any faults that you discover before, during, or after operation, unless you can fix them. You DO NOT need to record faults that you fix.

f. Be prepared to assist unit maintenance when required.

g. When a check and service procedure is required for both WEEKLY and BEFORE intervals, it is not necessary to do the procedure twice if the equipment is operated during the weekly period.

2-7. PMCS PROCEDURES.

a. Your Preventive Maintenance Checks and Services, Table 2-1, lists inspections and care required to keep your equipment in good operating condition. It is setup so you can make BEFORE (B) OPERATION checks as you walk around the equipment.

b. The "INTERVAL" column of Table 2-1 tells you when to do a certain check or service.

c. The "LOCATION, ITEM TO CHECK/SERVICE" column of Table 2-1 tells you the name of the item to be checked or serviced and where the item is located.

d. The "PROCEDURE" column of Table 2-1 tells you how to do required checks and services. Carefully follow these instructions. If you do not have tools, or if you cannot perform the procedure, notify your supervisor.

2-7. PMCS PROCEDURES - cont.

e. The "NOT FULLY MISSION CAPABLE IF:" column in Table 2-1 tells you when your equipment is not mission capable and why the system cannot be used.

f. If the equipment does not perform as required, refer to Chapter 3, Section II, Troubleshooting.

g. If anything looks wrong and you can't fix it, write it on your DA Form 2404. IMMEDIATELY, report it to your supervisor.

h. The following are checks that are common to the entire fuel system:

(1) Keep the equipment clean. Remove dirt, sand and debris from dry lock couplings, hose ends, gate valves and distribution nozzles to prevent excessive wear and contamination of the fuel system. Use soap and water to remove dirt.

(2) Bolts, nuts and screws. Check them for obvious looseness, missing, bent or broken condition on gate valves. If you find a bolt, nut or screw you think is loose, report it to your supervisor.

(3) Hoses. Look for wear, damage and leaks. Make sure clamps and quick disconnect couplings are tight. Wet spots show leaks, but a stain around a fitting or connector can also mean a leak. If a leak comes from a loose fitting or coupling, tighten it. If something is broken or worn out, report it to your supervisor.

i. When you check for "operating condition", look at the component to see if it's serviceable.

2-8. LEAKAGE CRITERIA.

WARNING

- **To prevent injury to personnel and damage to equipment, be certain all system components are securely connected before operation to avoid fuel spills.**
- **Fuel vapors are extremely flammable. Do not allow smoking within 100 feet of the fuel servicing areas. Be certain a suitable and properly charged fire extinguisher is available at all times.**

No fuel leaks are permissible when operating the HTARS. Immediately report all leaks to your supervisor.

2-9. OPERATOR PREVENTIVE MAINTENANCE CHECKS AND SERVICES.

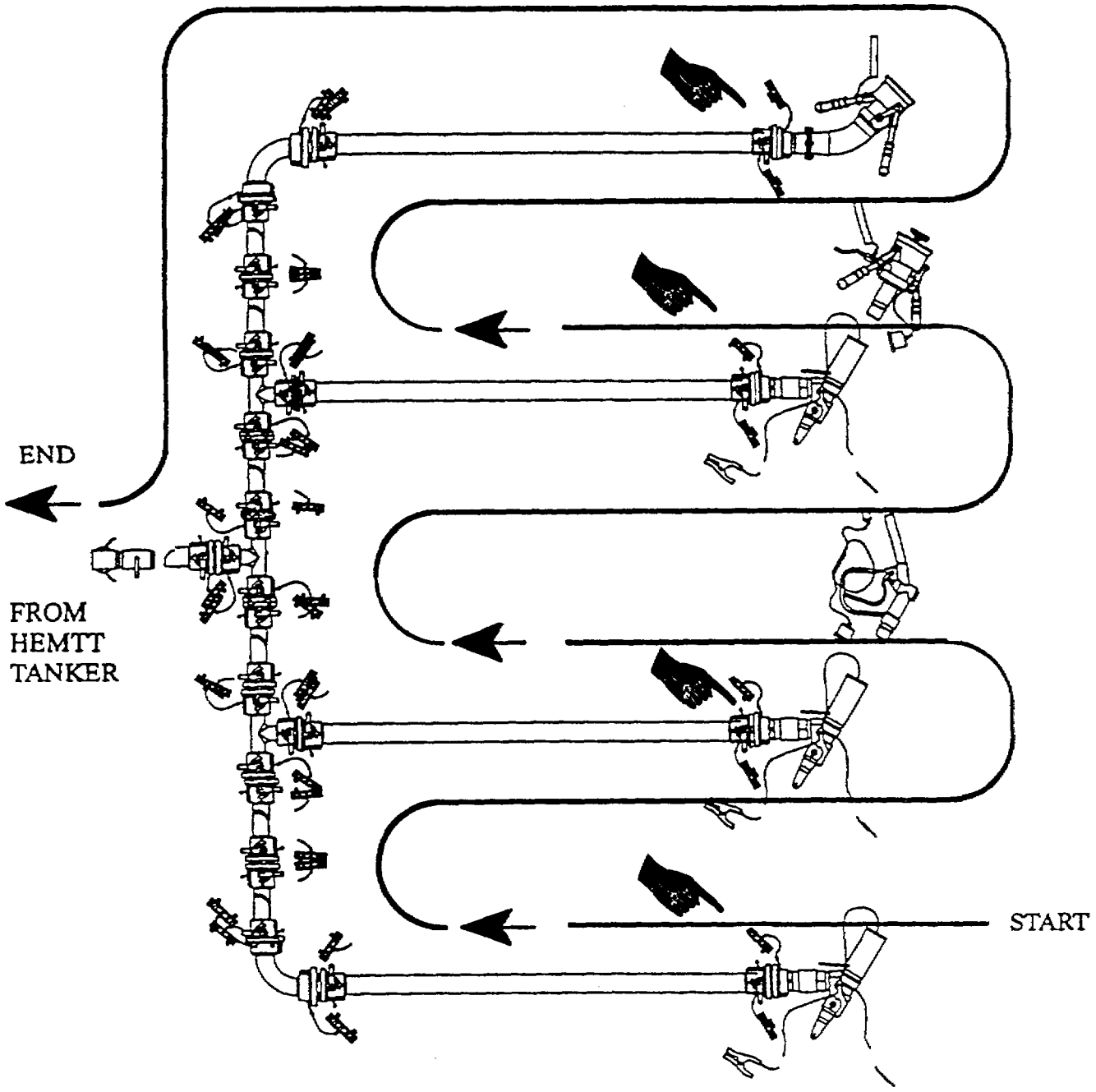

Figure 2-6. PMCS Routing Diagram.

2-9. OPERATOR PREVENTIVE MAINTENANCE CHECKS AND SERVICES - cont.

NOTE

If the equipment must be kept in continuous operation, do only the procedures that can be done without disturbing operation. Make complete checks and services when the equipment is shut down.

Table 2-1. Operator Preventive Maintenance Checks and Services for Models HTARS100 and HTARS101.

Item No.	Interval	Location Item Check/Service	Procedure	Not Fully Mission Capable If:
1	Before	HTARS CCR Nozzle	Perform "BEFORE'" PMCS in accordance with TM10-4930-248-13&P 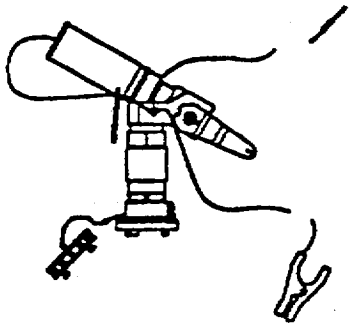	
2	Before	Open Port Nozzle	a. Inspect for cracked nozzle body. b. Inspect for bent or broken control handle. c. Inspect for damaged or missing dust cap or plug. 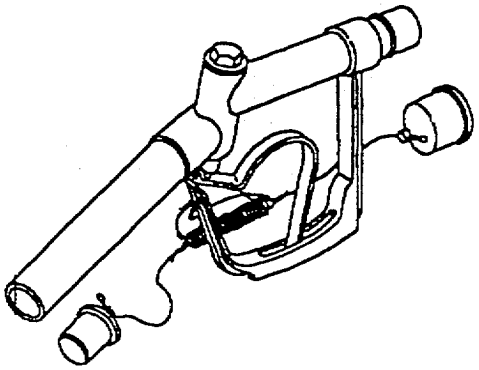	Nozzle body cracked. Control handle broken.

Table 2-1. Operator Preventive Maintenance Checks and Services For Models HTARS100 and HTARS101 - cont.

Item No.	Interval	Location Item Check/Service	Procedure	Not Fully Mission Capable If:
3	Before	Single Point Refueling Nozzle	a. Inspect nozzle for cracks and loose, bent or broken locking handles.	Nozzle body cracked; locking handles broken.
			b. Inspect control lever for cracks.	Control lever cracked.
			c. Inspect nozzle collar for rocks or debris stuck in adapter locking grooves. Clean as required.	
			d. Inspect adapter end of nozzle for excessive wear, cracks or damage.	Adapter cracked or damaged.
			e. Inspect non-valved dry break couplings for stuck locking pin, broken lock lugs and damaged or missing seal.	Locking pin stuck. seal damaged or missing. locking lugs cracked or damaged.
			f. Inspect for damaged or missing dust cap and dust cover.	
		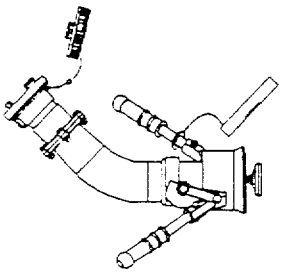 Model HTARS100	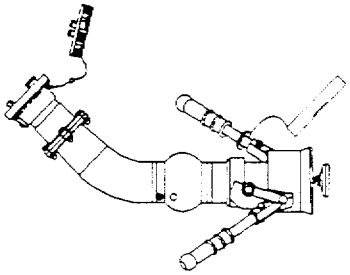 Model HTARS101	
4	Before	Recirculation Nozzle	a. Inspect nozzle body for cracks and loose, bent or broken locking handles,	Nozzle cracked; locking handles broken.
			b. Inspect control lever for cracks.	Control lever cracked or broken.
			c. Inspect nozzle collar for rocks or debris stuck in adapter locking grooves. Clean as required.	
			d. Inspect adapter end of nozzle for excessive wear, cracks or damage.	Adapter cracked or damaged.

Table 2-1. Operator Preventive Maintenance Checks and Services for Models HTARS100 and HTARS101 - cont.

Item No.	Interval	Location Item Check/Service	Procedure	Not Fully Mission Capable If:
4	Before	cont.	e. Inspect inlet adapter for excessive wear, cracks and damage. f. Inspect ball valve for cracked or missing control handle and missing sample tube. g. Inspect for damaged or missing dust cap and dust cover. 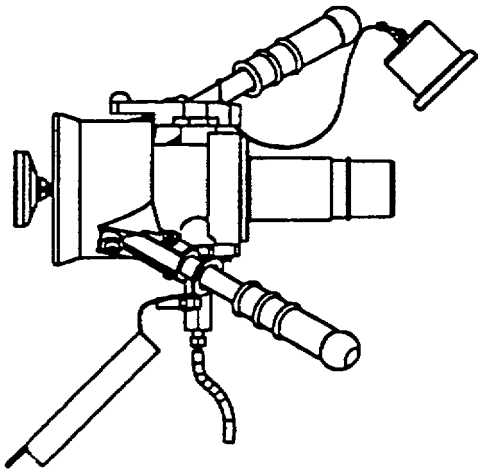	Inlet adapter worn, cracked or damaged. Ball valve control handle broken.
5	(DELETED)			
6	Before	Discharge Hose, 2 in x 50 ft.	a. Inspect for cuts, tears and deep abrasions in hose material. b. Check for and straighten kinked or twisted hoses.	Hoses cut or torn.

Table 2-1. Operator Preventive Maintenance Checks and Services for Models HTARS100 and HTARS101 - cont.

Item No.	Interval	Location Item Check/Service	Procedure	Not Fully Mission Capable If:
			c. Inspect valved dry break couplings for cracks, broken control arms, smooth flow handle operation, interlocking pin extension and damaged or missing lock lugs and seals.	Coupling cracked; control arms or lock lugs damaged. Seals damaged or missing. Handle is in OPEN position.
		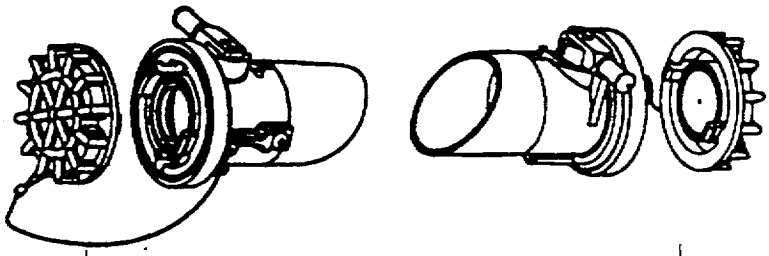		
7	Before	Elbows	a. Inspect elbow body for cracks and corrosion.	Elbow body cracked.
			b. (Model HTARS100) Inspect non-valved dry break couplings for stuck locking pin, broken lock lugs and damaged or missing seals.	Locking pin stuck, seal damaged or missing, locking lugs cracked or damaged.
			c. Inspect for damaged or missing dust caps.	
			d. (Model HTARS101) Inspect valved dry break couplings for cracks, broken control arms, smooth flow handle operation, interlocking pin extension and damaged or missing lock lugs and seals.	Coupling cracked; control arms or lock lugs damaged. Seals damaged or missing. Handle is in OPEN position.
		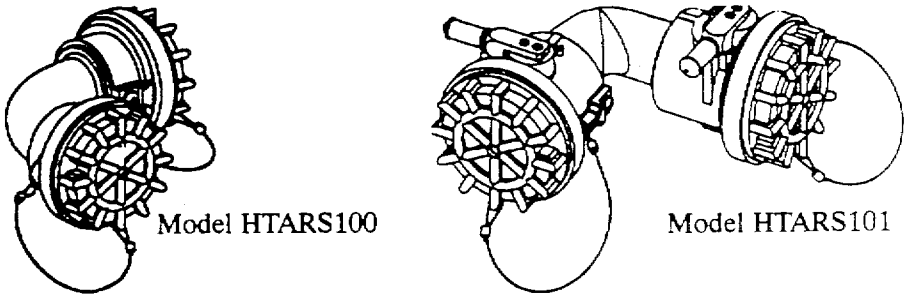		

Table 2-1. Operator Preventive Maintenance Checks and Services for Models HTARS100 and HTARS101 - cont

Item No.	Interval	Location Item Check/Service	Procedure	Not Fully Mission Capable If:
8	Before	Tees	a. Inspect tee body for cracks and corrosion.	Tee body cracked.
			b. Inspect valved dry break couplings for cracks, broken control arms, broken lock lugs and damaged or missing seals.	Coupling cracked; control arms or lock lugs damaged; seals damaged or missing.
			c. Inspect for damaged or missing dust caps.	
			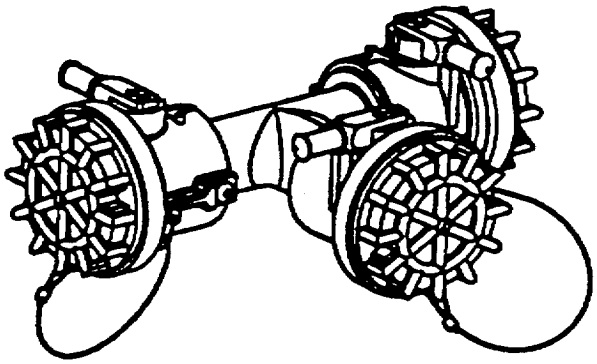	
9	Before	Discharge Hose, 3 in x 50 ft.	a. Inspect hose for cuts, tears and deep abrasions in hose material.	Hose cut or tom.
			b. Check for and straighten kinked or twisted hose.	
			c. Inspect valved dry break couplings for cracks, broken control arms, smooth flow handle operation, interlocking pin extension and damaged or missing lock lugs and seals.	Coupling cracked; control arms or lock lugs damaged. Seals damaged or missing. Handle is placed in OPEN position.
			d. Inspect quick disconnect coupling for cracks, damaged locking arms and damaged or missing gasket.	Body cracked; locking arms broken; gasket damaged or missing.

Table 2-1. Operator Preventive Maintenance Checks and Services for Models HTARS100 and HTARS101 - cont.

Item No.	Interval	Location Item Check/Service	Procedure	Not Fully Mission Capable If:
			e. Inspect for damaged or missing dust caps.	
			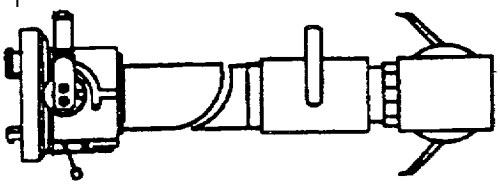	
10	Before	Grounding Rods	a. Inspect grounding rods for severe bends, cracks and corrosion. b. Verify that grounding clamp is securely connected. Reconnect if required.	Grounding rod missing or broken.
			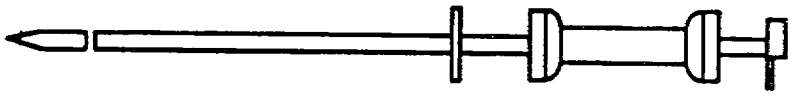	
11	Before	Adapters	a. Inspect for broken or missing adapters. Make sure that adapters required to connect the HTARS to the fuel source are available and they are in serviceable condition. b. Inspect adapters for damaged or missing seals, gaskets and dust cap.	Required adapters broken or missing. Gaskets or seals damaged or missing.
			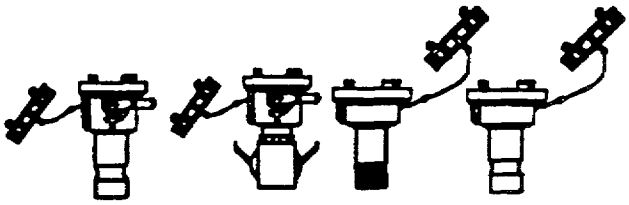	

Table 2-1. Operator Preventive Maintenance Checks and Services for Models HTARS100 and HTARS101 - cont

Item No.	Interval	Location Item Check/Service	Procedure	Not Fully Mission Capable If:
12	During	CCR Nozzle	Perform "DURING" PMCS in accordance with TM10-4930-248-13&P	
13	During	Open Port Nozzle	Inspect for leaks at fuel discharge tube, nozzle body and coupling.	Any fuel leak.
14	During	Single Point Refueling Nozzle	a. Inspect for leaks through end of nozzle (discharge end).	Any fuel leak.
			b. Inspect nozzle body and coupling for leaks.	Any fuel leak.
			c. (Model HTARS101) Inspect for leakage at pressure regulator breather.	Any fuel leak.
15	During	Recirculation Nozzle	a. Inspect for leaks through end of nozzle (discharge end).	Any fuel leak.
			b. Inspect for leaks between inlet adapter and nozzle body.	Any fuel leak.
			c. Inspect ball valve for leaks.	Any fuel leak.
16	(DELETED)			
17	During	Discharge Hose, 2 in x 50 ft.	Inspect hose material and valved dry break couplings for leaks.	Any fuel leak.
18	During	Elbows	Inspect elbow body and non-valved couplings for leaks.	Any fuel leak.
19	During	Tees	Inspect tee body and valved couplings for leaks.	Any fuel leak.
20	During	Discharge Hose, 3 in x 50 ft.	Inspect hose material, valved dry break coupling and ball valve assembly for leaks.	Any fuel leak.
21	During	Grounding Rods	Check connection of grounding clamps. Clamps must be securely fastened. Reconnect if required.	Grounding clamp (s) disconnected.

Table 2-1. Operator Preventive Maintenance Checks and Services for Models HTARS100 and HTARS101 - cont.

Item No.	Interval	Location Item Check/Service	Procedure	Not Fully Mission Capable If:
22	After	CCR Nozzle	Perform "AFTER" PMCS in accordance with TM10-4930-248-13&P	
23	After	Open Port Nozzle	a. Inspect for cracked nozzle body.	Nozzle body cracked.
			b. Inspect for bent or broken control handle.	Control handle broken.
			c. Inspect for damaged or missing dust cap or plug.	
24	After	Single Point Refueling Nozzle	a. Inspect nozzle for cracks and loose, bent or broken locking handles.	Nozzle body cracked; locking handles broken.
			b. Inspect control lever for cracks.	Control lever cracked.
			c. Inspect nozzle collar for rocks or debris stuck in adapter locking grooves. Clean as required.	
			d. Inspect adapter end of nozzle for excessive wear, cracks or damage.	Adapter cracked or Damaged.
			e. Inspect non-valved dry break couplings for broken lock lugs and damaged or missing seals.	Locking pin stuck; seal damaged or missing.
			f. (Model HTARS101) Inspect strainer screen for dirt and debris. Clean as required.	
			g. (Model HTARS101) Inspect strainer screen for cuts and tears.	Screen cut or torn.
25	After	Recirculation Nozzle	a. Inspect nozzle body for cracks and loose, bent or broken locking handles.	Nozzle cracked; locking handles broken.
			b. Inspect control lever for cracks.	Control lever cracked or broken.

Table 2-1. Operator Preventive Maintenance Checks and Services for Models HTARS100 and HTARS101 - cont.

Item No.	Interval	Location Item Check/Service	Procedure	Not Fully Mission Capable If:
			c. Inspect nozzle collar for rocks or debris stuck in adapter locking grooves. Clean as required.	
			d. Inspect adapter end of nozzle for excessive wear, cracks or damage.	Adapter cracked or damaged.
			e. Inspect inlet adapter for excessive wear, cracks and damage.	Inlet adapter worn, cracked or damaged.
			f. Inspect ball valve for cracked or missing control handle and missing sample tube.	Ball valve control handle broken.
26	(DELETED)			
27	After	Discharge Hose, 2 in x 50 ft.	a. Inspect for cuts, tears and deep abrasions in hose material.	Hoses cut or torn.
			b. Inspect valved dry break couplings for cracks, broken control arms, damaged or missing lock lugs and seals. Inspect for damaged or missing dust caps.	Coupling cracked; control arms or lock lugs damaged; seals damaged or missing.
28	After	Elbows	a. Inspect elbow body for cracks and corrosion.	Elbow body cracked.
			b. Inspect non-valved dry break couplings for stuck locking pin, broken lock lugs and damaged or missing seals.	Locking pin stuck; seals damaged or missing; locking lugs cracked or damaged.
			c. Inspect for damaged or missing dust caps.	

Table 2-1. Operator Preventive Maintenance Checks and Services for Models HTARS100 and HTARS101 - cont.

Item No.	Interval	Location Item Check/Service	Procedure	Not Fully Mission Capable If:
29	After	Tees	a. Inspect tee body for cracks and corrosion.	Tee body cracked.
			b. Inspect valved dry break couplings for cracks, broken control arms, broken lock lugs and damaged or missing seals.	Coupling cracked; control arms or lock lugs damaged; seals damaged or missing.
			c. Inspect for damaged or missing dust caps.	
30	After	Discharge Hose, 3 in x 50 ft.	a. Inspect hose for cuts, tears and deep abrasions in hose material.	Hose cut or torn.
			b. Check for and straighten kinked or twisted hose.	
			c. Inspect valved dry break couplings for cracks, broken control arms, broken lock lugs and damaged or missing seals.	Coupling cracked; control arms or lock lugs damaged; seals damaged or missing.
			d. Inspect quick disconnect coupling for cracks, damaged locking arms and damaged or missing gasket.	Body cracked; locking arms broken; gasket damaged or missing.
			e. Inspect for damaged or missing dust caps.	

Section III. OPERATION UNDER USUAL CONDITIONS

2-10. ASSEMBLY AND PREPARATION FOR USE.

a. Site Selection. Select a level installation area free of overhead obstructions . The site must be accessible to the HEMTT tanker and approaching aircraft and be large enough to contain all system components. Surface contour must provide good drainage away from operating equipment and aircraft staging points.

After selecting the installation area, position HTARS equipment near the site.

b. Unpacking.

(1) Remove HTARS components from transport vehicle.

(2) To aid assembly, separate components into groups of similar parts during removal. For example, group all the fuel hoses together, then all the tees, elbows and nozzles.

c. Unrolling Fuel Hoses. Refer to figure 2-7.

WARNING

Proper grounding of HTARS components is required to prevent static sparks and possible fire or explosion. Do not mix components from other fuel systems with the HTARS system. HTARS hoses are internally grounded and must not be used with ungrounded hoses.

NOTES

- **The following instructions apply to all fuel hoses used in the HTARS. Repeat these procedures for each fuel hose during fuel system assembly.**
- **Hose straps have two loops. One loop is used as a handle to lift and carry hose; the other loop is wrapped over hose to prevent loss of hose strap.**

(1) Position rolled fuel hose (1) at first connection point.

(2) Pull tag end of hose strap (3) against buckle (4) until slide (2) releases tension on strap. Remove tag end of strap from buckle.

(3) Unroll fuel hose (1) in direction of next connection point.

(4) When end of roll is reached, go back to coupling ends of hose and pull one end to next connection point.

(5) Swivel dry break couplings (5 and 6) so that control arms are facing up.

d. Dry Break Coupling Assembly. Components of the HTARS are equipped with dry break couplings to permit rapid system assembly and disassembly. There are two types of dry break couplings; valved and non-valved. Valved dry break couplings permit isolation of defective components and control of fuel flow by opening or closing the hand operated valve built into the coupling. Non-valved dry break couplings do not have an internal ball valve. The following paragraphs describe procedures to connect both types of couplings.

2-10. ASSEMBLY AND PREPARATION FOR USE - cont.

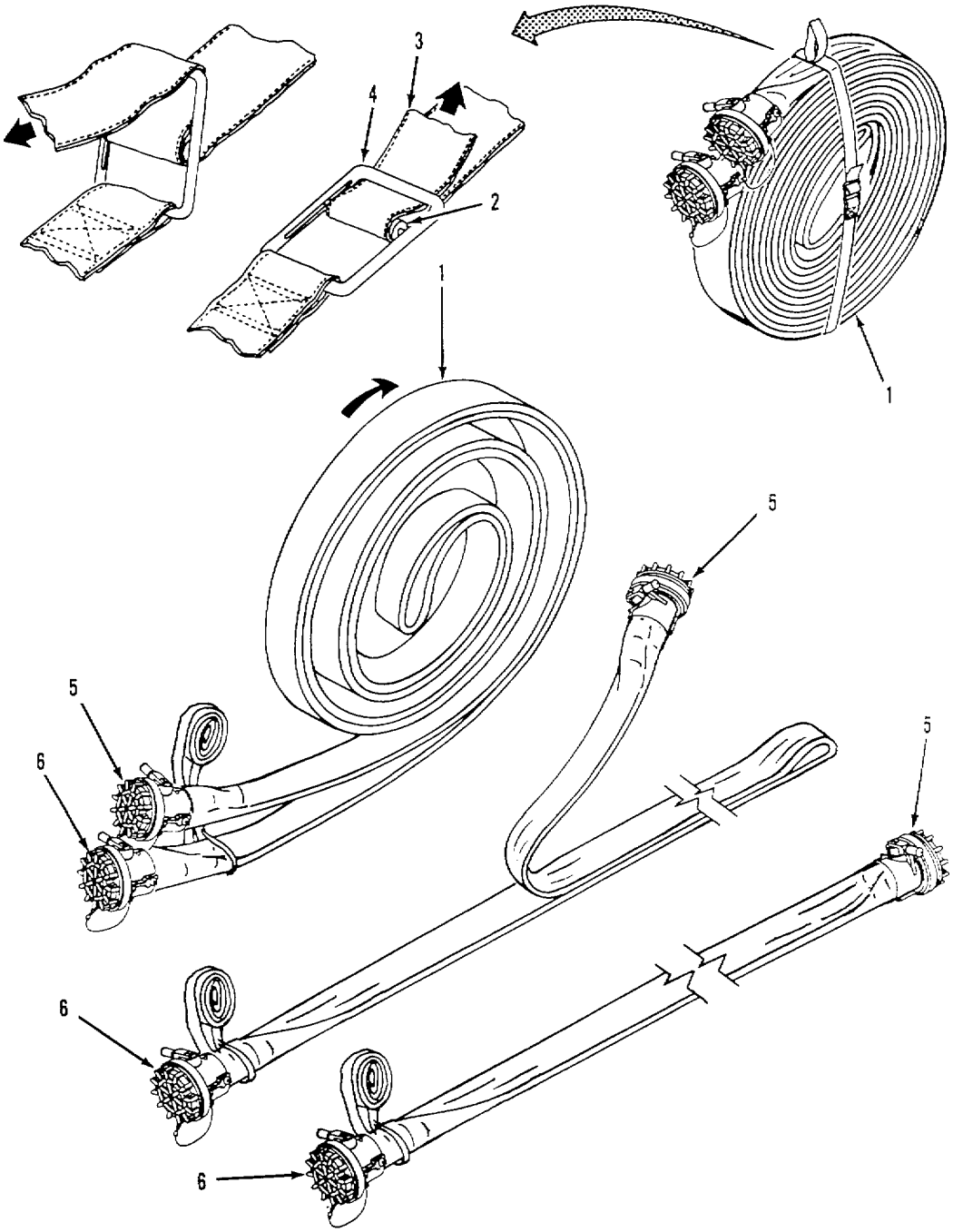

Figure 2-7. Unrolling Fuel Hoses.

2-10. ASSEMBLY AND PREPARATION FOR USE - cont.

e. Valved Dry Break Coupling Connection. Refer to figure 2-8.

CAUTION

To prevent damage to the equipment and contamination of the fuel system, use care when connecting couplings to avoid getting dirt, sand and debris on coupling mating surfaces and sealing components. Do not remove dust caps from couplings until components are ready to be connected.

NOTES

- **All dry break type couplings are interchangeable. A valved dry break coupling maybe connected to either a valved or non-valved dry break coupling.**
- **The following instructions apply to all operator tasks requiring connection of valved dry break couplings. One coupling is shown. The others are similar.**

(1) Pull out and hold grip (1) and set control arm (2) to CLOSE position.

(2) Twist dust cap (3) to the left and disconnect from coupling (4!.

(3) Twist dust cap (5) to the left and disconnect from coupling (6),

NOTE

One locking lug is larger than the other. Both locking lugs match a socket in the mating coupling.

(4) Mate locking lugs (7) on coupling (4) with sockets (8) in body of coupling (6).

(5) While holding coupling (6) in place, turn coupling (4) to the right (clockwise) until both couplings are locked together.

CAUTION

DO NOT force flow handle to OPEN position. Damage to the interlocking mechanism can result in inadvertent disconnect during operation.

If control arm cannot be set to OPEN, couplings may not be correctly connected. If flow handle fails to operate smoothly or hose connectors fail to lock with control arm (flow handle) in the OPEN position DO NOT USE.

(6) Pull back on grip (1) and set control arm (2) to OPEN position.

CAUTION

To prevent dust, grit and sand from contaminating couplings, connect caps together after couplings are joined.

(7) Connect dust cap (3) to dust cap (5).

2-10. ASSEMBLY AND PREPARATION FOR USE - cont.

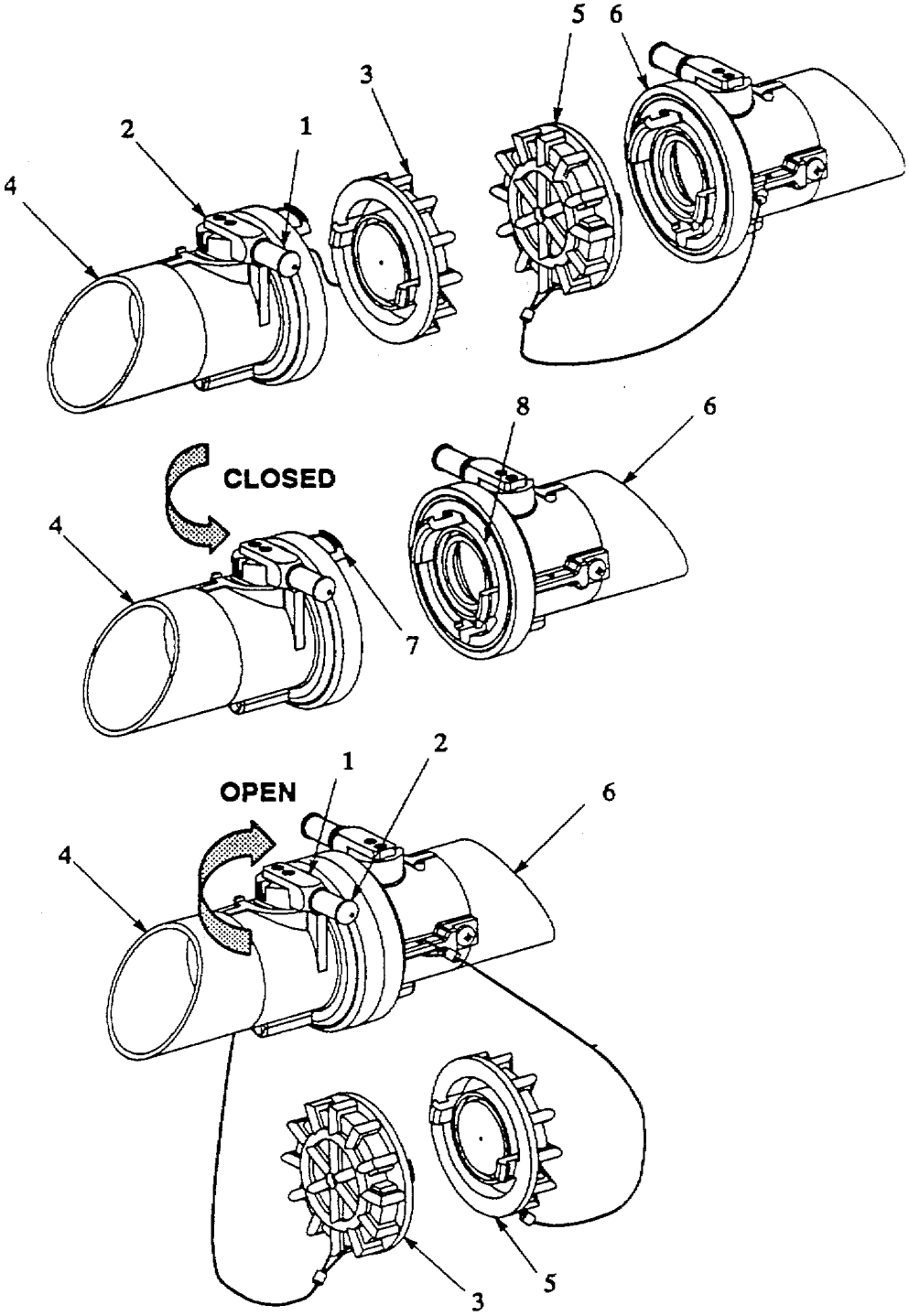

Figure 2-8. Valved Dry Break Coupling Assembly

2-10. ASSEMBLY AND PREPARATION FOR USE - cont.

f. Non-Valved Dry Break Coupling Assembly. Refer to figure 2-9.

CAUTION

To prevent damage to the equipment and contamination of the fuel system, use care when connecting couplings to avoid getting dirt, sand and debris on coupling mating surfaces and sealing components. Do not remove dust caps from couplings until components are ready to be connected.

NOTES

- **All dry break type couplings are interchangeable. A valved dry break coupling may be connected to either a valved or non-valved dry break coupling.**
- **The following instructions apply to all operator tasks requiring connection of non-valved dry break couplings. One coupling is shown. The others are similar.**

(1) Twist dust cap (1) to the left and disconnect from coupling (2).

(2) Twist dust cap (3) to the left and disconnect from coupling (4).

NOTE

One locking lug is larger than the other. Both locking lugs match a socket in the mating coupling.

(3) Mate locking lugs (5) on coupling (4) with sockets (6) in body of coupling (4).

(4) Twist couplings (5 and 6) to the right (clockwise) until both couplings lock together.

CAUTION

If couplings can be separated, couplings are not connected correctly.

(5) Twist couplings (5 and 6) to the left (counterclockwise) and test security of connection.

CAUTION

To prevent dust, grit and sand from contaminating couplings, connect caps together after couplings are joined.

(6) Connect dust cap (1) to dust cap (3).

2-10. ASSEMBLY AND PREPARATION FOR USE - cont.

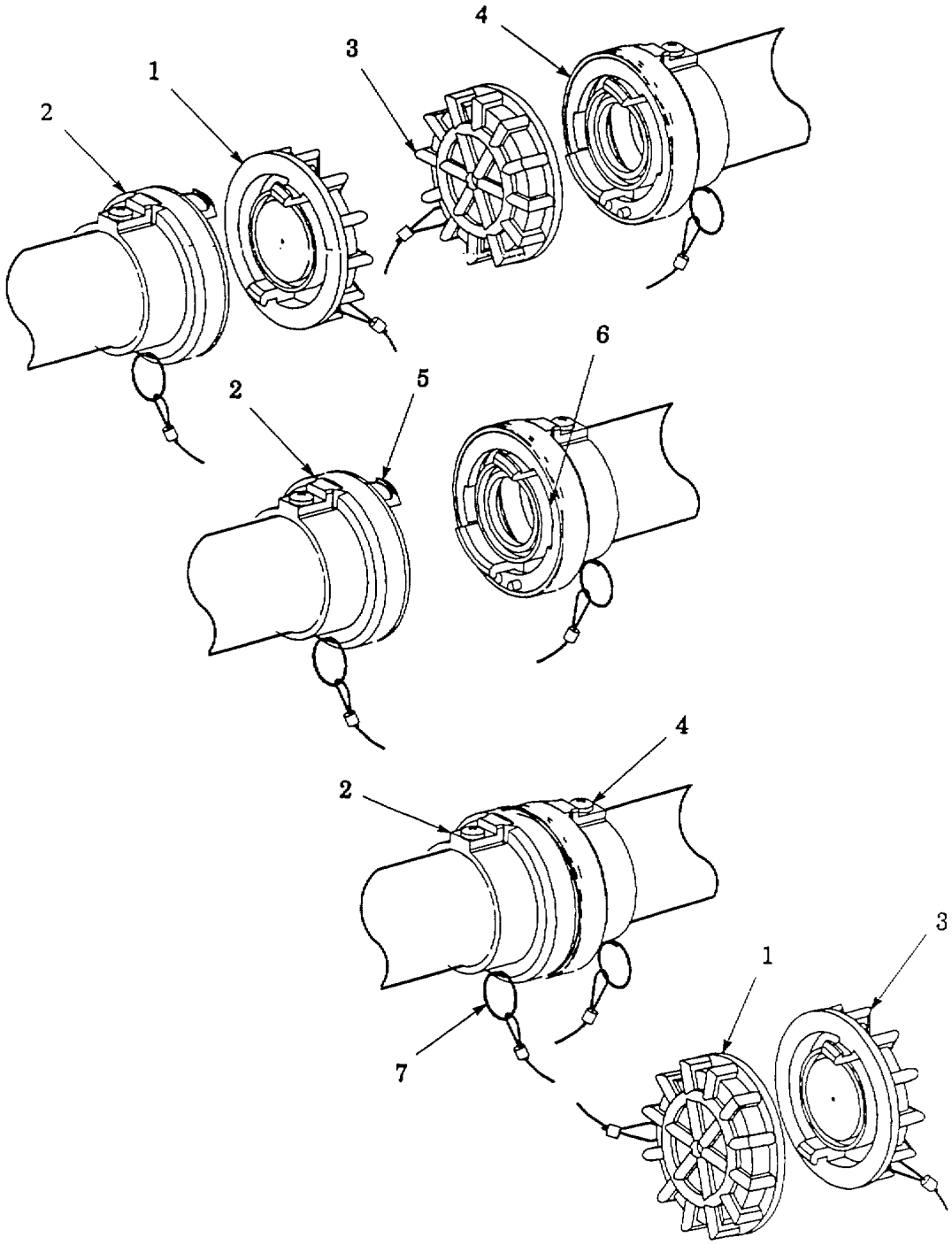

Figure 2-9. Non-valved Dry Break Coupling Assembly.

2-10. ASSEMBLY AND PREPARATION FOR USE - cont.

g. Fuel Hose Assembly. Refer to figure 2-10.

CAUTION

To prevent contamination of fuel system components, keep dirt mud, sand, and debris from entering open couplings during assembly.

NOTES

- **This manual covers installation of all kit components. You may adjust the number of components used and their position in the system to meet your mission requirements.**
- **Refer to para 2-10c to unroll fuel hoses and para 2-10e and 2-10f for connection of dry break couplings.**
- **The fuel hose used to connect the HTARS to the HEMTT tanker is 3-inch diameter. All others are 2-inch diameter. All fuel hoses are the same length.**

(1) Assemble and prepare HEMTT tanker for use in accordance with TM9-2320-279-10-1.

(2) Connect quick disconnect end of fuel hose (1) to HEMTT tanker fuel outlet (2).

(3) Connect tee (3) to fuel hose (1).

(4) Connect fuel hose (4) to tee (3).

(5) Connect tee (5) to fuel hose (4).

(6) Connect fuel hose (6) to tee (5)

(7) Connect two fuel hoses (7 and 8) to tee (5).

(8) Connect elbow (9) to fuel hose (8).

(9) Connect fuel hose (10) to elbow (9).

(10) Connect fuel hose (11) to tee (3).

(11) Connect tee (12) to fuel hose (11).

(12) Connect fuel hose (13) to tee (12).

(13) Connect two fuel hoses (14 and 15) to tee (12).

(14) Connect elbow (16) to fuel hose (15).

(15) Connect fuel hose (17) to elbow (16).

2-10. ASSEMBLY AND PREPARATION FOR USE - cont.

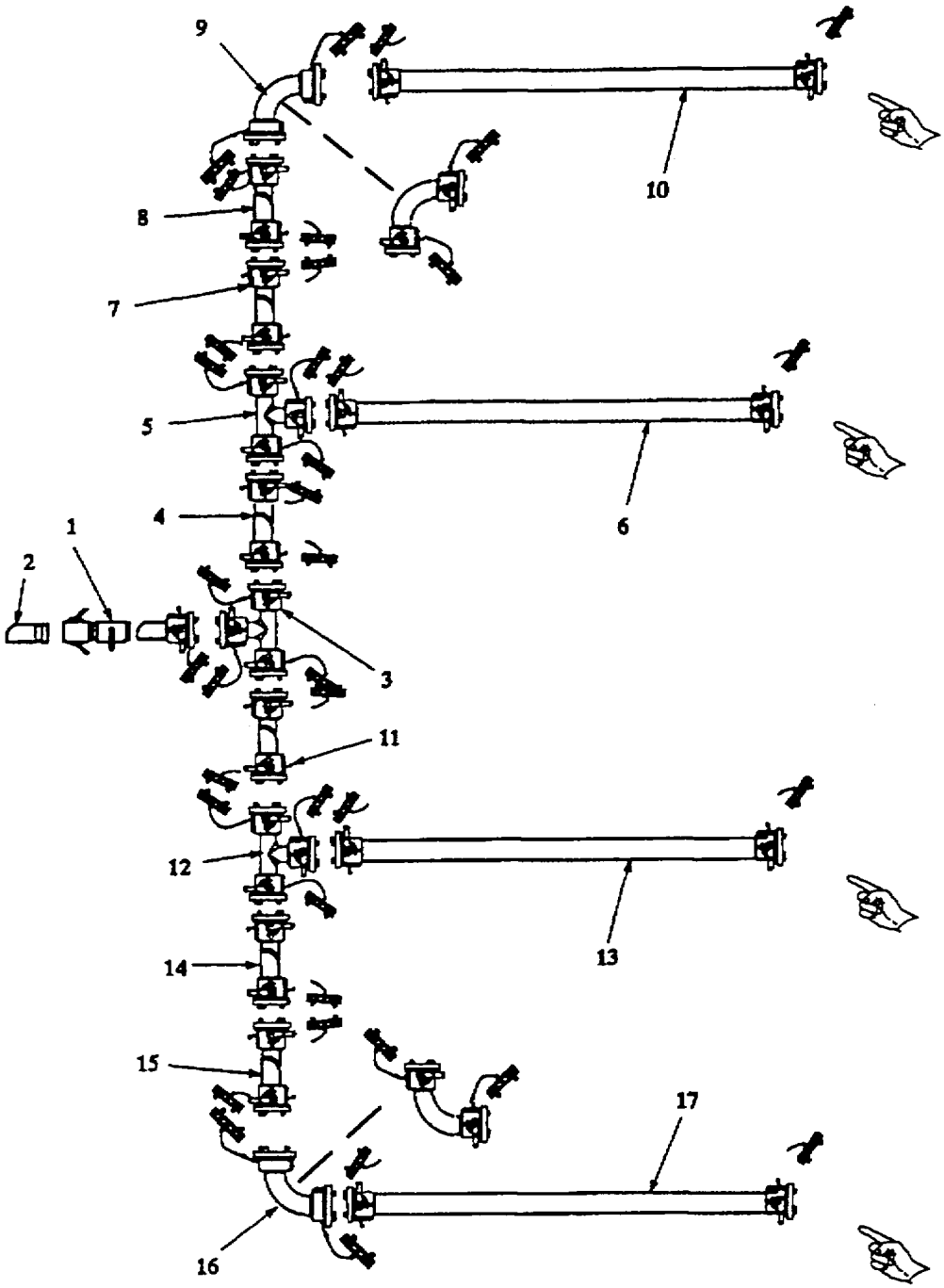

Figure 2-10. Fuel Hose Assembly.

2-10. ASSEMBLY AND PREPARATION FOR USE - cont.

NOTE
Steps 16 through 19 have been deleted.

h. Fuel Nozzle Installation. Refer to figure 2-11. Variations in fuel system layout are permitted to meet your specific mission requirements. All of the same type fuel nozzle or a combination of different type nozzles may be used in the fuel system. The following paragraphs provide instructions for connecting one of each type nozzle.

NOTE
Refer to para 2-10f for connection of non-valved dry break couplings.

D1 Nozzle Installation

(1) Twist dust cap (1) to the left and remove from coupling (2) on D1 nozzle (3).

(2) Connect coupling (2) on D1 nozzle (3) to fuel hose (4).

CCR Nozzle Installation

(3) Remove dust cap (5) from coupling (6) on CCR nozzle (7).

(4) Connect coupling (6) to fuel hose (8).

(5) Repeat steps 3 and 4 for remaining CCR nozzles (10 and 17).

Open Port Nozzle Installation

(6) Pull back collar (9) on CCR nozzle (10) and remove cover (11).

(7) Remove cover (12) from coupling (13) on open port nozzle (14).

2-10. ASSEMBLY AND PREPARATION FOR USE - cont.

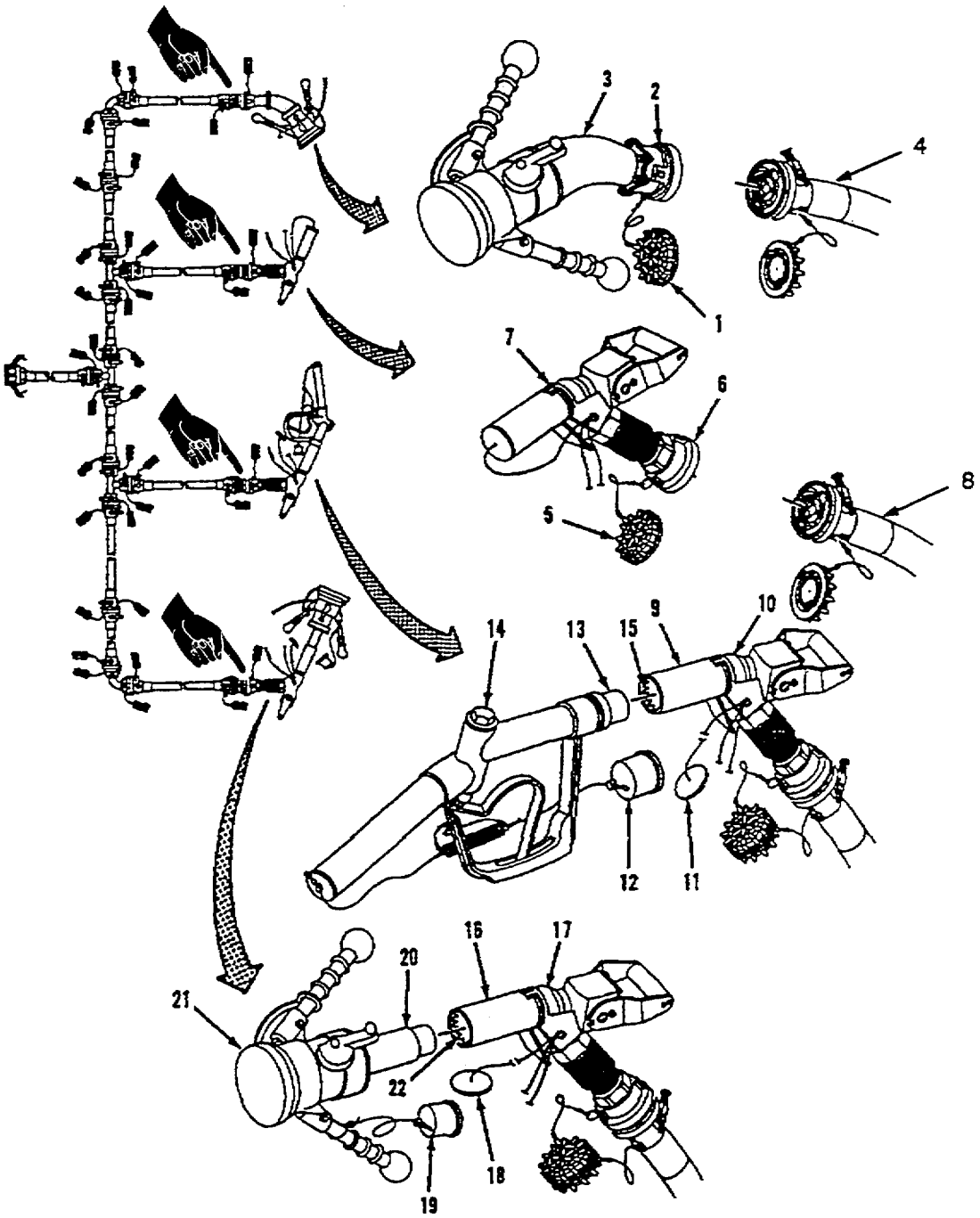

Figure 2-11. Fuel Nozzle Installation.

2-10. ASSEMBLY AND PREPARATION FOR USE - cont.

(8) Push coupling (13) into discharge adapter (15) on CCR nozzle (10). (Discharge adapter will lock onto coupling.)

Recirculation Nozzle Installation

(9) Pull back collar (16) on CCR nozzle (17) and remove cover (18),

(10) Remove cover (19) from coupling (20) on recirculation nozzle (21).

(11) Push coupling (20) into discharge adapter (22) on CCR nozzle (17). (Discharge adapter will lock onto coupling.)

i. Ground Rod Installation. Refer to figure 2-12. Before the HTARS can be placed in operation, it must be properly grounded. A ground rod with a built in slide hammer is supplied for each refueling point. Ground rods must be installed within 6 feet of each refueling point to provide enough slack in grounding cable to connect nozzles to aircraft adapters.

WARNINGS

- **Use care to prevent injury when driving ground rod into the soil. Wear gloves to protect your hands. Do not hold ground rod above the stop collar.**
- **Do NOT operate the fuel system until it has been properly grounded. Flow fuel can generate static charges within the fuel hoses. A static discharge could ignite the fuel or cause an explosion of fuel vapor.**

(1) Place ground rod (1) in vertical position.

(2) Raise, then lower slide (2) forcefully against stop collar (3). Repeat until collar is flush with surface of soil (rod will be at least three feet deep).

NOTES

- **If ground cannot be sufficiently penetrated, bury the ground rod in a trench not less than four feet long and at least eight inches beneath the surface.**
- **If driving ground rod becomes too difficult, try soaking the soil with water. Continue alternately soaking, then driving the rod until installation is complete.**

(3) Using separate ground cable, ground aircraft to ground rod.

NOTE

CCR nozzle ground clamp may be used to supplement aircraft grounding or bonding.

(4) Connect ground clamp (4) (from CCR nozzle) to ground rod (1).

(5) Repeat steps (1) through (3) for three remaining ground rods.

2-.10. ASSEMBLY AND PREPARATION FOR USE - cont.

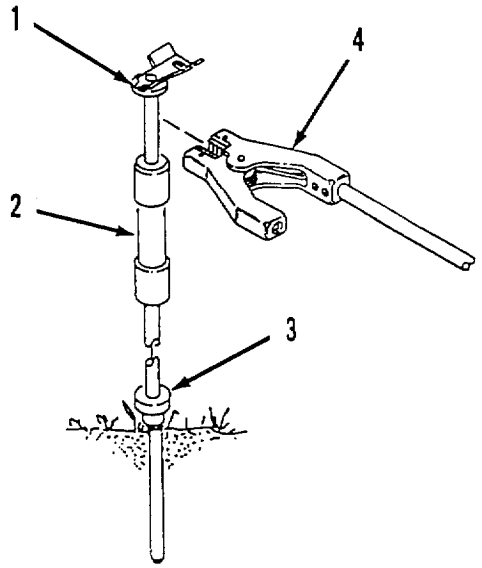

Figure 2-12. Ground Rod Installation.

2-11. INITIAL ADJUSTMENT.

a. Hoses, Couplings and Nozzles.

(1) Verify that all connections are secure.

(2) Verify that valved dry break couplings are positioned with control arms facing up.

(3) Verify that caps and plugs are installed on all open components.

(4) Inspect fuel hoses for kinks, twists and tight bends. Straighten hoses as required.

b. CCR Nozzles. Perform initial adjustments in accordance with TM10-4930-248-13&P.

c. HEMTT Tanker. Perform initial adjustments in accordance with TM9-2320-279-10-1.

2-12. OPERATING PROCEDURES.

a. General. The HTARS has two primary modes of operation, refuel and recirculation. In the refueling mode, fuel is pumped from the HEMTT tanker through the system hoses to the refueling points (nozzles). In the recirculation mode, the refueling nozzle (CCR or D1) is disconnected from the refueling point and the recirculation nozzle is connected. The recirculation nozzle is connected to the HEMTT tanker and fuel circulates through the system hoses and back to the tanker. The HTARS can operate in both modes at the same time.

b. Single Point Refueling Nozzle (D1) Operation.

CAUTION

Immediately drain a substantial portion of the fuel from the nozzle whenever the valve on the hose attached to it is turned to off or the nozzle is removed from the system. The trapped fuel can create large internal pressure that can damage the nozzle when the temperature rises.

Nozzle Connection. Refer to figure 2-13.

(1) Remove dust cover (1) from end of nozzle body (2).

(2) Grasp handles (3) and hold end of nozzle body (2) in alinement with aircraft refueling adapter (4).

NOTE

Press nozzle body against adapter while slightly rotating the nozzle to aline the nozzle index pins with the adapter slots.

(3) Press nozzle body (2) against aircraft refueling adapter (4). Turn handles (3) to the right until end of nozzle mates with aircraft refueling adapter. Continue to turn handles to the right until nozzle body locks firmly onto aircraft adapter and contacts mechanical stops.

WARNING

Setting control lever to less than full OPEN position is unsafe and can result in a flowing fuel disconnect and dangerous fuel spill. Make sure handle is in the full OPEN position.

CAUTION

If control lever is not in the full OPEN position (over center), refueling time will increase and premature failure of nozzle and/or aircraft refueling adapter may result.

(4) Rotate control lever (5) to full OPEN (over center) position against the internal mechanical stop.

(5) Verify that base of control lever (4) prevents rotation of nozzle body (2) by attempting to disengage nozzle from aircraft refueling adapter (4).

2-12. OPERATING PROCEDURES -cont.

Nozzle Disconnection. Refer to figure 2-13.

CAUTION

If control lever is not in the full CLOSED position (against mechanical stop), internal fuel pressure will force the poppet into the OPEN position.

(6) Rotate control lever (5) to the full CLOSE position (against internal mechanical stops).

(7) Grasp handles (3) and rotate nozzle body (2) to the left until nozzle body disconnects from aircraft adapter (4).

(8) Install dust cover (1) on end of nozzle body (2).

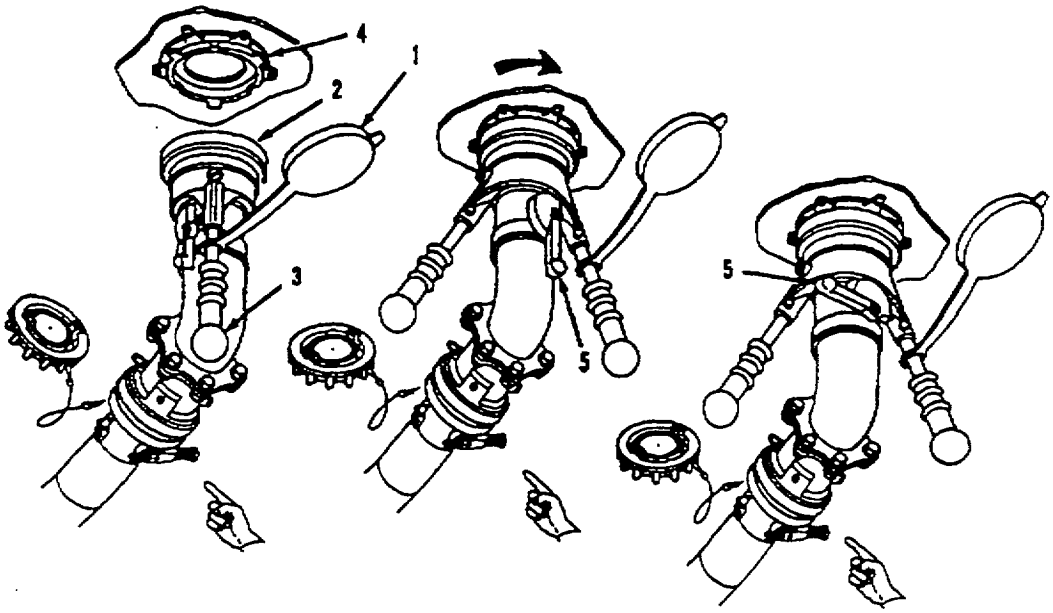

NOTE: Model HTARS100 nozzle shown. Model HTARS101 nozzle is similar.

Figure 2-13. Single Point Refueling Nozzle (D1) Operation.

2-12. OPERATING PROCEDURES -cont.

c. CCR Nozzle Operation. For operation of the CCR nozzle, refer to TM10-4930-248-13&P.

d. Recirculation Nozzle Operation. The recirculation nozzle must be connected to the CCR nozzle prior to operation. The CCR nozzle acts to prevent over-pressurizing of the HEMTT tanker by reducing system fuel pressure.

CAUTION

Immediately drain a substantial portion of the fuel from the nozzle whenever the valve on the hose attached to it is turned to off or the nozzle is removed from the system. The trapped fuel can create large internal pressure that can damage the nozzle when the temperature rises.

Recirculation Nozzle Connection. Refer to figure 2-14.

(1) Set control handle (1) on ball valve (2) to close position.

(2) Remove dust cover (3) from end of nozzle body (4).

(3) Grasp handles (5) and hold end of nozzle body (4) in alinement with aircraft refueling adapter (6).

NOTE

Press nozzle body against adapter while slightly rotating the nozzle to aline the nozzle index pins with the adapter slots.

(4) Press nozzle body (4) against aircraft refueling adapter (6). Turn handles (5) to the right until end of nozzle mates with aircraft refueling adapter. Continue to turn handles to the right until nozzle body locks firmly onto aircraft adapter and contacts mechanical stops.

WARNING

Setting control lever to less than full OPEN position is unsafe and can result in a flowing fuel disconnect and dangerous fuel spill. Make sure handle is in the full OPEN position.

CAUTION

If control lever is not in the full OPEN position (over center), recirculation time will increase and premature failure of nozzle and/or tanker adapter may result.

(5) Rotate control lever (7) to full OPEN (over center) position against the internal mechanical stop.

Fuel Sampling. Refer to figure 2-14.

(6) Verify that base of control lever (7) prevents rotation of nozzle body (4) by attempting to disengage nozzle from aircraft refueling adapter (6).

(7) Set CCR Nozzle (8) to OPEN. Refer to TM10-4930-248-13&P.

2-12. OPERATING PROCEDURES - cont.

(8) To take fuel sample, place end or tube (9) in sample container.

(9) Slowly move control handle (1) on ball valve (2) to open position.

(10) When sampling is complete, set control handle (1l on ball valve (2) to close position.

Recirculation Nozzle Disconnection. Refer to figure 2-14.

(11) Set CCR Nozzle (8) to CLOSE. Refer to TM10-4930-248-13&P.

CAUTION
If control lever is not in the full CLOSED position (against mechanical stop), internal fuel pressure may force the poppet into the OPEN position.

(12) Rotate control lever (7) to full CLOSE position (against the internal mechanical stops).

(13) Grasp handles (5) and rotate nozzle body (4) to the left until nozzle body disconnects from tanker adapter (6).

(14) Install dust cover (3) on end of nozzle body (4).

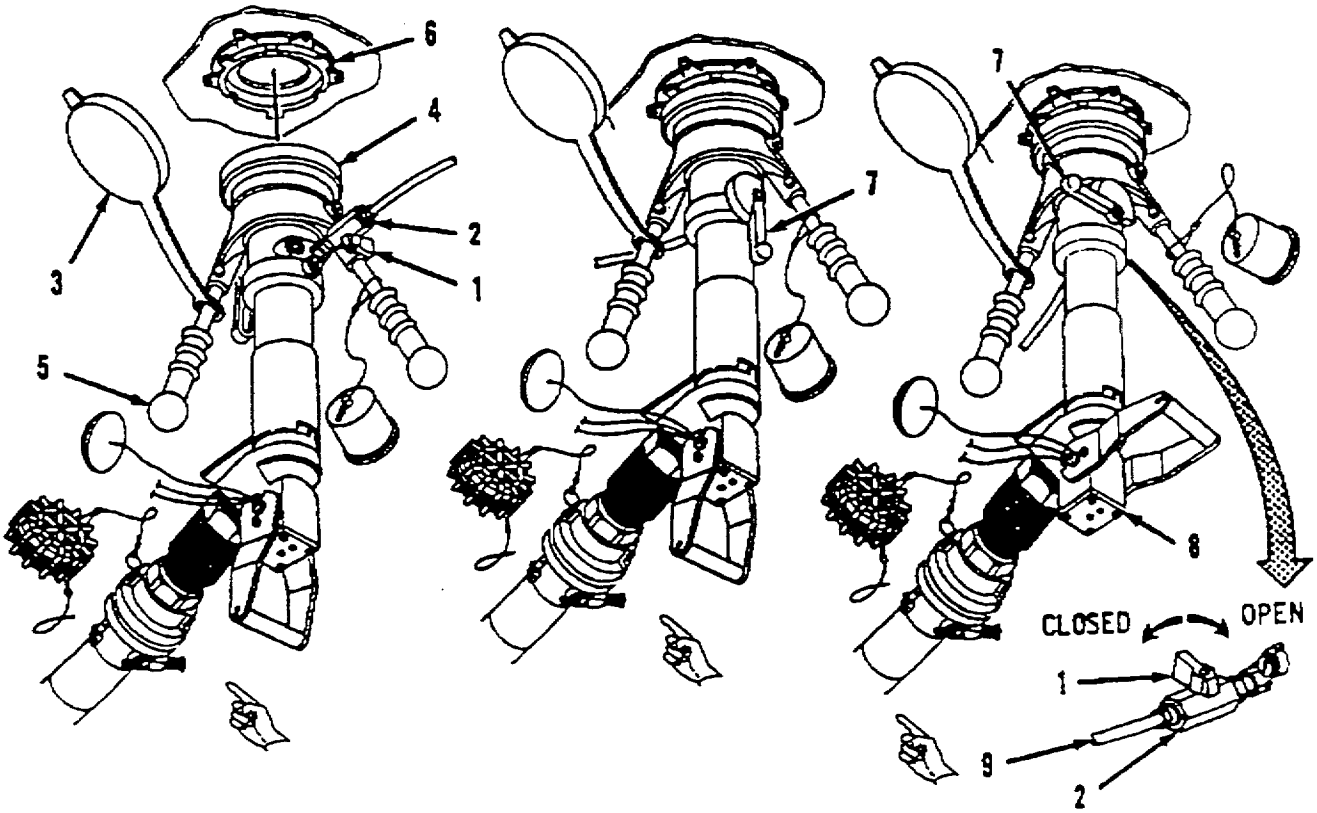

Figure 2-14. Single Point Refueling Nozzle (D1) Operation.

2-12. OPERATING PROCEDURES - cont.

e. Open Port Nozzle Operation. Refer to figure 2-15. The open port nozzle must be connected to the CCR nozzle prior to operation. The CCR nozzle reduces system fuel pressure to the open port nozzle to prevent excessive fuel flow to the aircraft.

(1) Remove dust cover (1) from end of discharge tube (2).

(2) Place end of discharge tube (2) in fuel tank adapter (3).

(3) Set CCR Nozzle (4) to OPEN. Refer to TM 10-4930-248-13&P.

(4) Squeeze control handle (5) to dispense fuel.

(5) When fuel tank is full, release control handle (5).

(6) Remove end of discharge tube (2) from fuel tank adapter (3).

(7) Set CCR nozzle (4) to CLOSE. Refer to TM 10-4930-248-13&P.

(8) Install dust cover (1) on end of discharge tube (2).

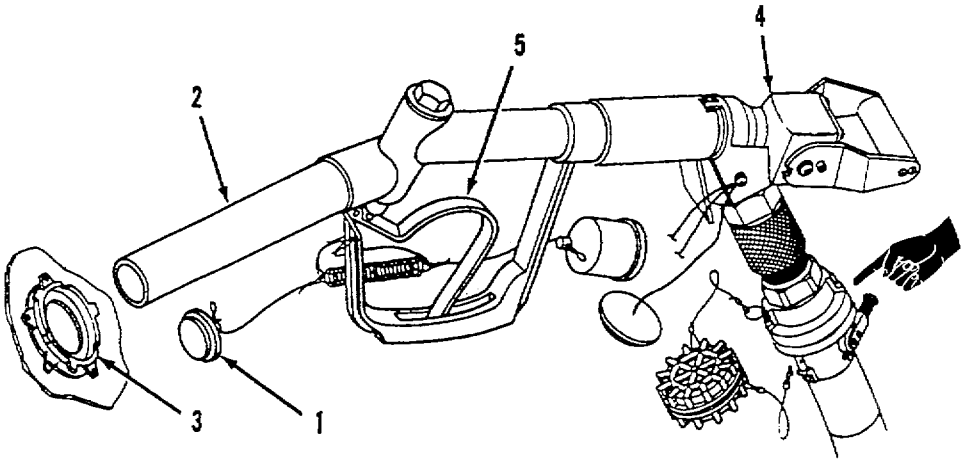

Figure 2-15. Open Port Nozzle Operation.

2-12. OPERATING PROCEDURES - cont.

f. Fuel System Diagram. Refer to figure 2-16. Fuel is supplied to the HTARS by the HEMTT tanker. The tanker pumps fuel through the hoses to the fuel nozzles. Fuel distribution is controlled by valved couplings installed on the 2-inch fuel hoses and tees and a ball valve installed in the 3-inch fuel hose.

Up to four refueling points can be assembled from the HTARS components. Refueling points are determined by the location of the fuel nozzles in the system. Each refueling point consists of a nozzle and its connecting hoses. The four refueling points may be isolated from the system by closing the appropriate upstream valve. Defective components may be replaced without affecting operating portions of the system by closing the nearest upstream and downstream valves.

g. Fuel System Startup.

WARNINGS

Refueling operations are potentially dangerous. Make sure you identify and eliminate all safety hazards before operating the fuel system. If a fuel spill occurs during refueling, immediately shut down the system, isolate the defective component(s) and clean up spilled fuel. Observe the following safety precautions and warnings to prevent injury to personnel and damage to the equipment.

- **Do not allow smoking within 100 feet of the fuel servicing areas. Fuel vapors are extremely flammable. Post NO SMOKING signs around refueling area. Do not operate system or components near open flame or excessive heat. Death or injury could result from exploding or burning fuel. Suitable and properly charged fire extinguishers must be available at all times.**

- **Wear protective goggles and gloves. Use fuel resistant gloves when handling system components due to toxic effects of some fuel additives. Avoid contact with skin, eyes, and clothes. If fuel contacts eyes, immediately flush eyes with clean fresh water and get medical attention.**

- **Avoid getting fuel on your body or clothing. Fuel can cause chemical burns on unprotected skin. If clothing becomes saturated with fuel, remove clothing immediately and wash your body with hot soapy water.**

- **Do not breathe fuel vapors. Refuel only in well-ventilated area. Vapors are toxic and can cause serious illness or death. If dizziness occurs, leave area and get fresh air. Get medical attention. Static discharge could ignite the fuel or cause an explosion of the fuel vapor. Do not operate the system until properly grounded. Make sure all grounding rods are installed and grounding cable are properly connected.**

- **Be certain that nozzles are properly bonded to the aircraft or vehicle being refueled. Make sure the HEMTT tanker is grounded.**

- **Radio transmitters can cause an arc at antennas. Do Not ground equipment to a radio antenna. Do not transmit during refueling operations.**

- **Before operation, be certain all system components are securely connected to avoid fuel spills. If fuel spill occurs, cover the area with dry soil to reduce rate of vaporization. During operation avoid fuel spills as much as possible. Make sure a suitable fire extinguisher is charged and readily available in case of fire.**

2.12. OPERATING PROCEDURES - cont.

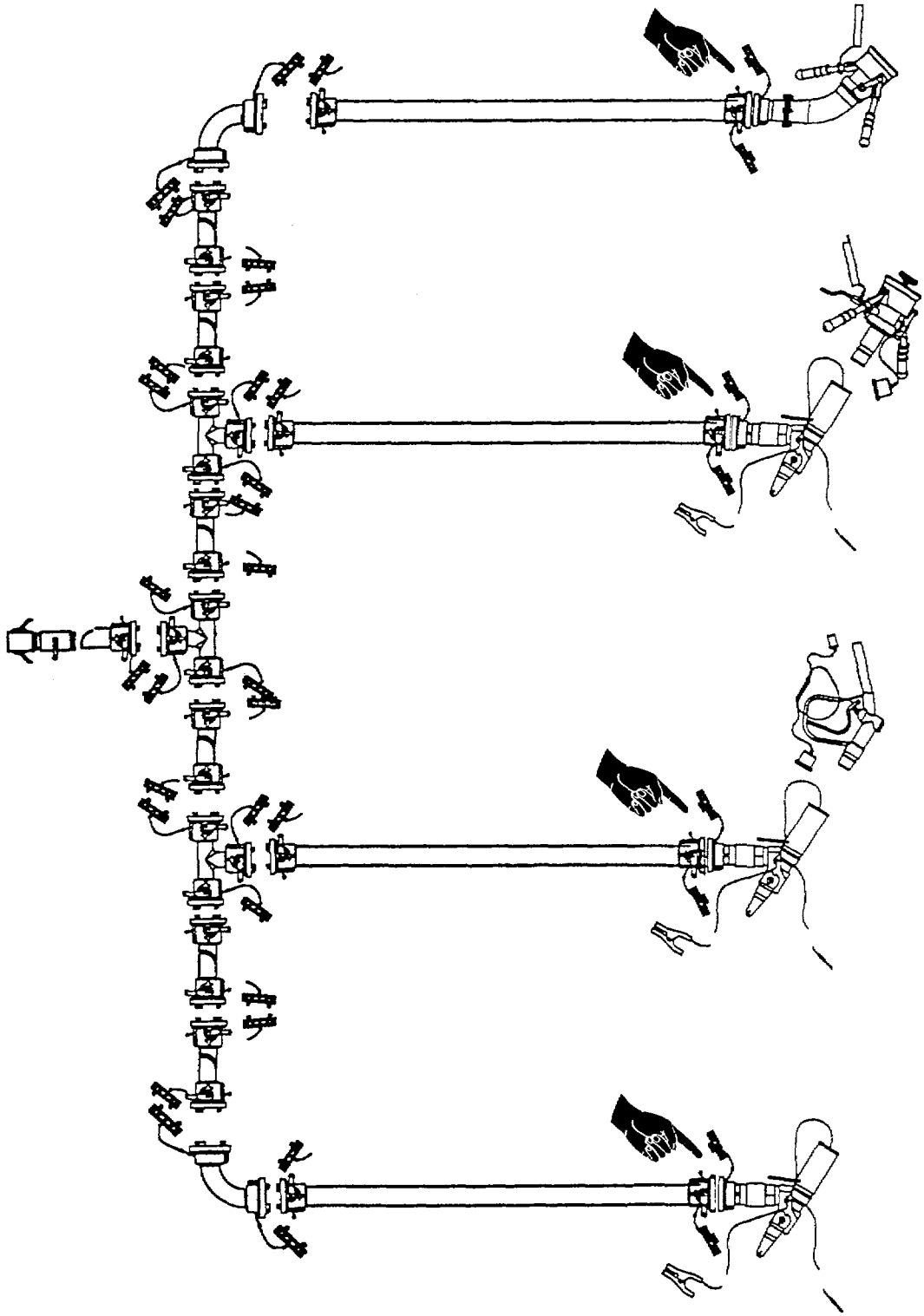

Figure 2-16. Fuel System Control Valves.

2-12. OPERATING PROCEDURES-cont.

Refueling Mode

(1) Connect fuel nozzle to aircraft refueling adapter. Refer to para 2-12b, 2-12c, 2-12d, or 2-12e as applicable for type nozzle in use.

(2) Verify that all valves between HEMTT tanker and fuel nozzle are open.

(3) Start and operate HEMTT tanker. Refer to TM 9-2320-279-10-1.

(4) When aircraft fuel tank is full, disconnect fuel nozzle from aircraft adapter. Refer to para 2-12b, 2-12c, 2-12d, or 2-12e as applicable for the type nozzle in use.

Recirculation Mode

NOTE

One recirculation nozzle is supplied with the HTARS. To recirculate the entire system, recirculation procedure must be performed for each refueling point.

(5) Connect recirculation nozzle to refueling point (CCR nozzle). Refer to para 2-12d.

(6) Reposition hoses as required to reach HEMTT tanker.

(7) Connect recirculation nozzle to HEMTT tanker recirculation adapter. Refer to para 2-12d.

(8) Start and operate HEMTT tanker. Refer to TM 9-2320-279-10-1.

(9) When recirculation operation is complete, disconnect recirculation nozzle from HEMTT tanker recirculation adapter. Refer to para 2-12d.

g. Fuel System Shutdown. Shut down HEMTT tanker in accordance TM 9-2320-279-10-1.

2-13. DECALS AND INSTRUCTION PLATES.

a. CCR Nozzle. For decals and instruction plates on the CCR nozzle, refer to TM 10-4930-248-13&P.

b. HEMTT Tanker. For decals and instruction plates on the HEMTT Tanker, refer to TM 9-2320-279-10-1.

2-14. OPERATING AUXILIARY EQUIPMENT.

a. CCR Nozzle. Instructions for operating the CCR nozzle are contained in TM 10-4930-248-13&P.

WARNING

Engine driven tankers must not be operated in enclosed areas unless exhaust discharge is properly vented to the outside. Be alert at all times during operation for odors and symptoms of carbon monoxide exposure.

b. HEMTT Tanker. Instructions for operating the HEMTT tanker are contained in TM 9-2320-279-10-1.

2-15. PREPARATION FOR MOVEMENT.

CAUTION

Never defuel the system without first isolating the CCR nozzle. Irreparable damage to the diaphragm may result in an unserviceable nozzle.

a. Ground Rod Removal. Refer to figure 2-17.

WARNING

Use care to prevent injury when removing ground rods. Wear gloves to protect your hands. Do not hold ground rod below upper stop collar.

(1) Disconnect ground clamp (1) (from CCR nozzle) from ground rod (2).

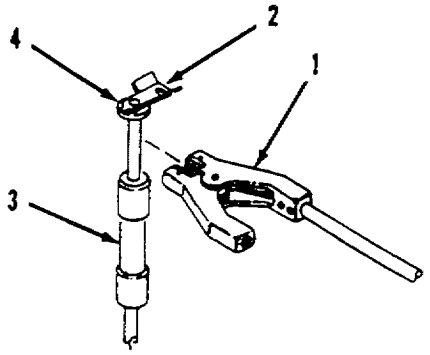

Figure 2-17. Ground Rod Removal.

2-15. PREPARATION FOR MOVEMENT- cont.

(2) Disconnect ground cable from aircraft.

(3) Lift slide (3) forcefully against upper stop collar (4). Repeat until ground rod (2) is pulled from soil.

(4) Repeat steps (1), (2) and (3) for three remaining ground rods.

b. Non-Valved Dry Break Coupling Disconnection. Refer to figure 2-18.

CAUTION

To prevent damage to the equipment and contamination of fuel system components, use care when disconnecting couplings to avoid getting dirt, sand and debris on coupling mating and sealing components. Install dust caps on all open couplings.

NOTE

The following instructions apply to all operator tasks requiring disconnection of non-valved dry break couplings. One coupling is shown. The others are similar.

(1) Turn dust cap (1) to the left and separate from dust cap (3).

(2) While pulling back on ring (7), turn coupling (2) to the left (counterclockwise) and disconnect from coupling (4).

(3) Position dust cap (3) on coupling (4). Turn dust cap to the right to secure cap to coupling.

(4) Position dust cap (1) on coupling (2). Turn dust cap to the right to secure cap to coupling.

c. Valved Dry Break Coupling Disconnection. Refer to figure 2-19.

CAUTION

To prevent damage to the equipment and contamination of fuel system components, use care when disconnecting couplings to avoid getting dirt, sand and debris on coupling mating and sealing components. Install dust caps on all open couplings.

NOTE

The following instructions apply to all operator tasks requiring disconnection of valved dry break couplings. One coupling is shown. The others are similar.

(1) Turn dust cap (3) to the left and separate from dust cap (5).

(2) Pull back on grip (1) and set control arm (2) to CLOSE position.

(3) While holding coupling (6) in place, turn coupling (4) to the left (counterclockwise) until couplings disconnect.

(4) Position dust cap (5) on coupling (6). Turn dust cap to the right to secure cap to coupling.

(5) Position dust cap (3) on coupling (4). Turn dust cap to the right to secure cap to coupling.

12-15. PREPARATION FOR MOVEMENT - cont

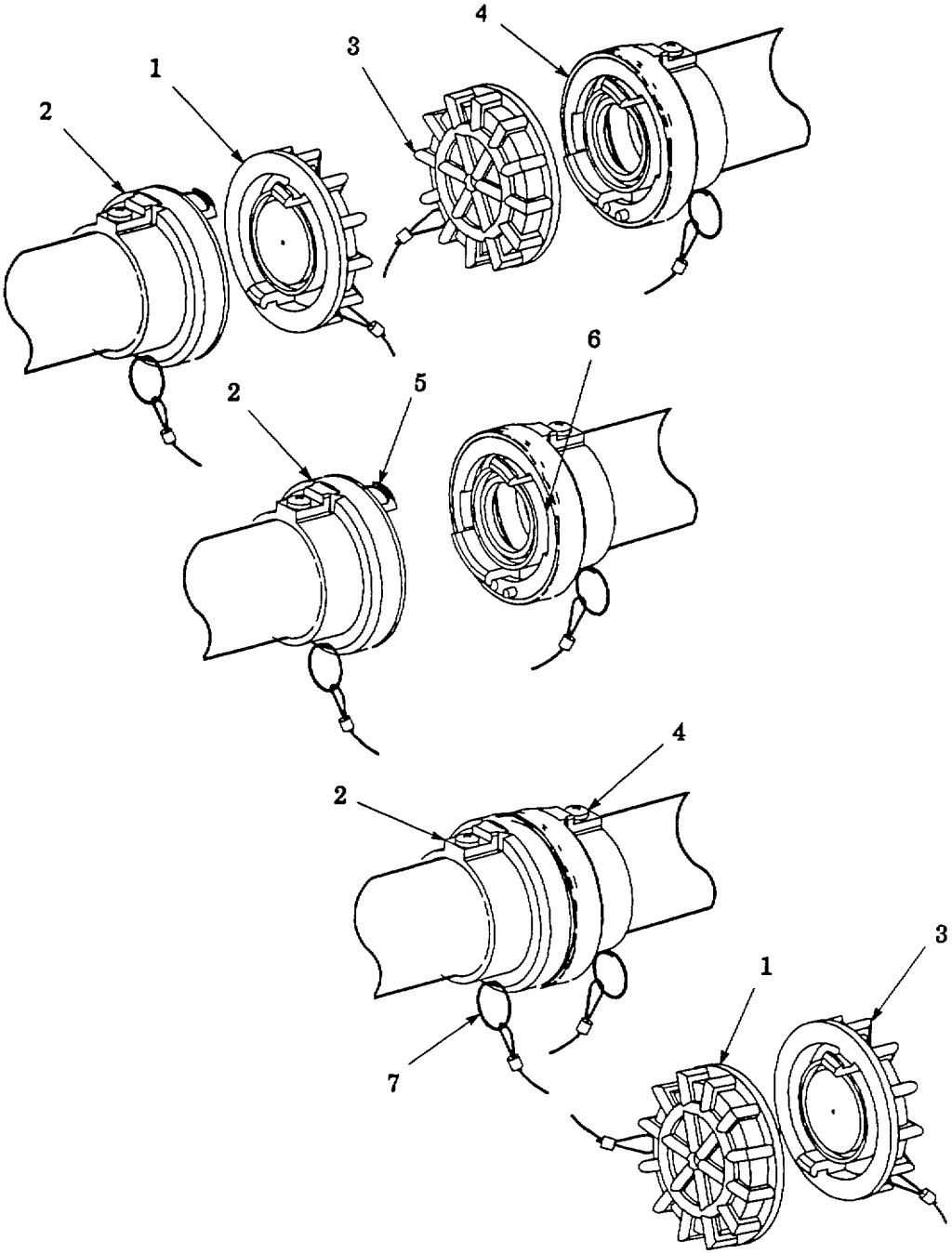

Figure 2-18. Non-valved Dry Break Coupling Disconnection.

2-15 PREPARATION FOR MOVEMENT - cont.

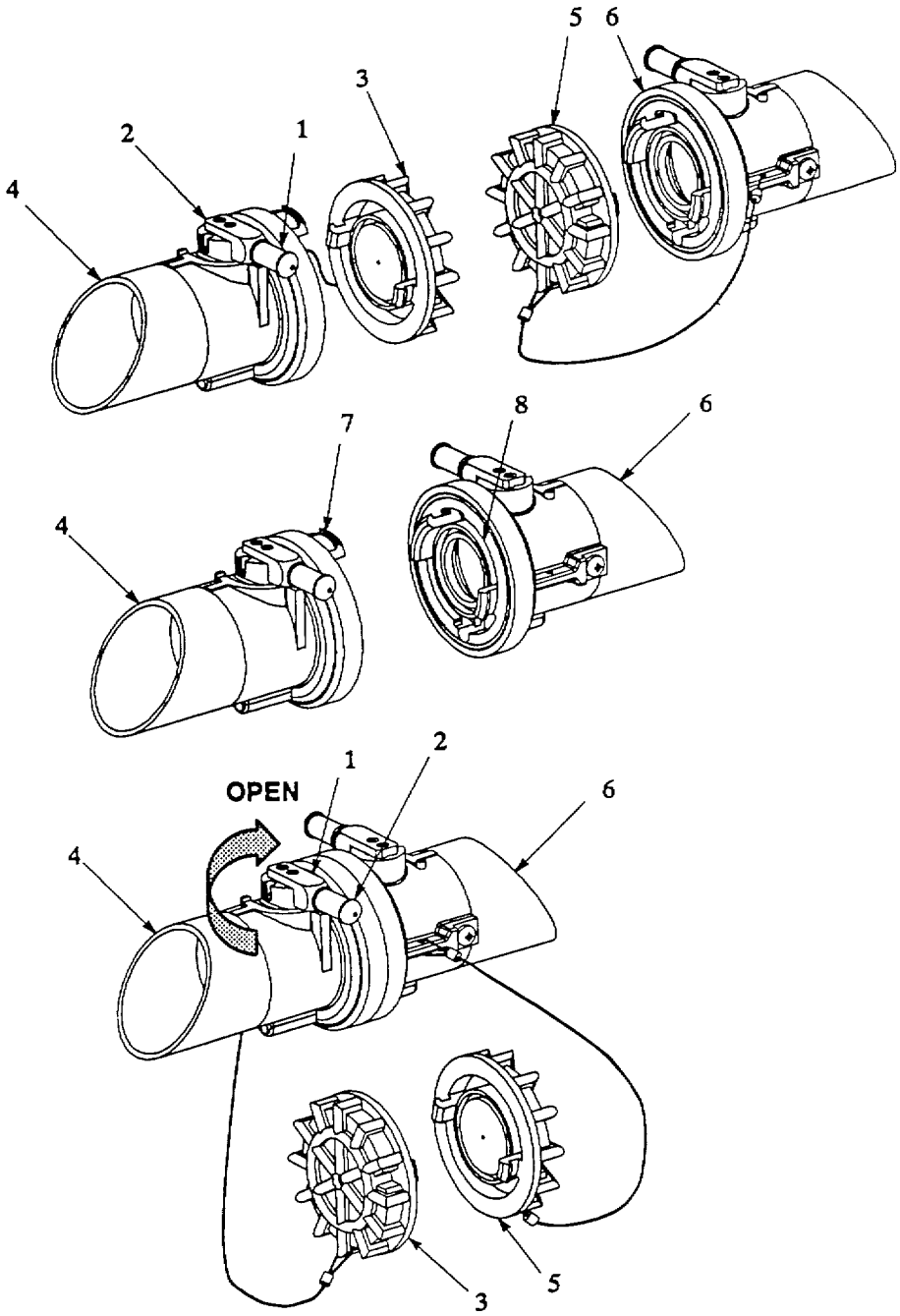

Figure 2-19. Valved Dry Break Coupling Disconnection.

12-15. PREPARATION FOR MOVEMENT - cont.

d. Fuel Nozzle Removal. Refer to figure 2-20. The system layout being disassembled mav have been modified to meet mission requirements. All of the same type fuel nozzle or a combination of different type nozzles might be installed. The following paragraphs provide instructions for disconnecting one of each type nozzle.

CAUTION

To prevent contamination of fuel system components, keep dirt, mud, sand and debris from entering open couplings and dust caps during disassembly. Make sure protective dust caps/plugs are installed after components are disconnected,

NOTE

Drain residual fuel from nozzles into a suitable container. Dispose of fuel in accordance with applicable regulations.

Recirculation Nozzle Removal

(1) Pull back collar (16) on CCR nozzle (17) and disconnect recirculation nozzle (21) from discharge adapter (22).

(2) Install cover (19) over coupling (20) on recirculation nozzle (21).

(3) Push cover (18) into discharge adapter (22) on CCR nozzle (17). Collar (16) will move forward and secure cover in place. Open Port Nozzle Removal

(4) Pull back collar (9) on CCR nozzle (10) and disconnect open port nozzle (14) from discharge adapter (15).

(5) Install cover (12) over coupling (13) on open port nozzle (14).

(6) Push cover (11) into discharge adapter (15) on CCR nozzle (10). Collar (9) will move forward and secure cover in place.

NOTE

Refer to para 2-15b for disconnection of non-valved dry break couplings.

CCR Nozzle Removal

(7) Disconnect coupling (6) and remove CCR nozzle (7).

(8) Connect dust cap (5) to coupling (6) on CCR nozzle (7).

(9) Repeat steps 7 and 8 for remaining CCR nozzles (10 and 17).

D1 Nozzle Removal

(10) Disconnect coupling (2) and remove Dl nozzle (3).

(11) Connect dust cap (1) to coupling (2) on D1 nozzle (3).

2-15. PREPARATION FOR MOVEMENT cont

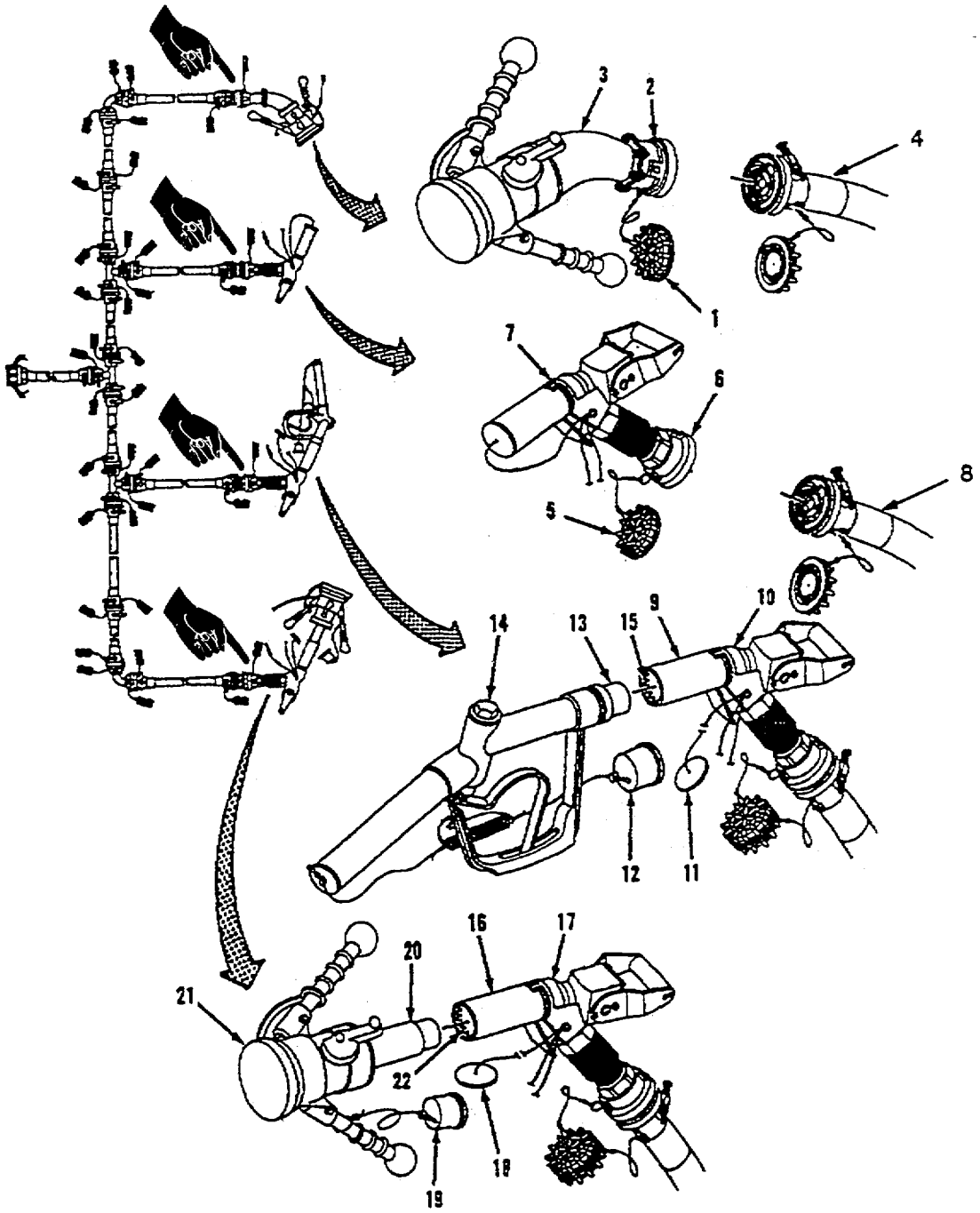

Figure 2-20. Fuel Nozzle Removal.

12-15. PREPARATION FOR MOVEMENT - cont.

e. Fuel Hose Disassembly. Refer to figure 2-21. The fuel hose layout being disassembled mav have been modified to meet mission requirements. The following paragraphs provide instructions for disconnecting a typical fuel hose layout.

WARNINGS

- **Do not allow smoking within 100 feet of the fuel servicing areas. Fuel vapors are extremely flammable. Post NO SMOKING signs around refueling area. Do not operate system or components near open flame or excessive heat. Death or injury could result from exploding or burning fuel. Suitable and properly charged fire extinguishers must be available at all times.**
- **Wear protective goggles and gloves. Use fuel resistant gloves when handling system components due to toxic effects of some fuel additives. Avoid contact with skin, eyes, and clothes. If fuel contacts eyes, immediately flush eyes with clean fresh water and get medical attention.**
- **Avoid getting fuel on your body or clothing. Fuel can cause chemical burns on unprotected skin. If clothing becomes saturated with fuel, remove clothing immediately and wash your body with hot soapy water.**
- **Do not breathe fuel vapors. Vapors are toxic and can cause serious illness or death. If dizziness occurs, leave area and get fresh air. Get medical attention.**

CAUTION

To prevent contamination of fuel system components, keep dirt, mud, sand and debris from entering open couplings and dust caps during disassembly. Make sure protective dust caps/plugs are installed after components are disconnected.

NOTES

- **Refer to para 2-15b for disconnection of non-valved dry break couplings and para 2-15c for valved dry break couplings.**
- **Valved dry break couplings must be set to CLOSE before hoses can be disconnected.**
- **Drain residual fuel from hoses into a suitable container. Dispose of fuel in accordance with applicable regulations.**

NOTE

Steps 1 through 4 have been deleted.

(5) Disconnect fuel hose (17) from elbow (15).

(6) Disconnect elbow (16) from fuel hose (15).

(7) Disconnect two fuel hoses (14 and 15) from tee (12).

2-15. PREPARATION FOR MOVEMENT - cont.

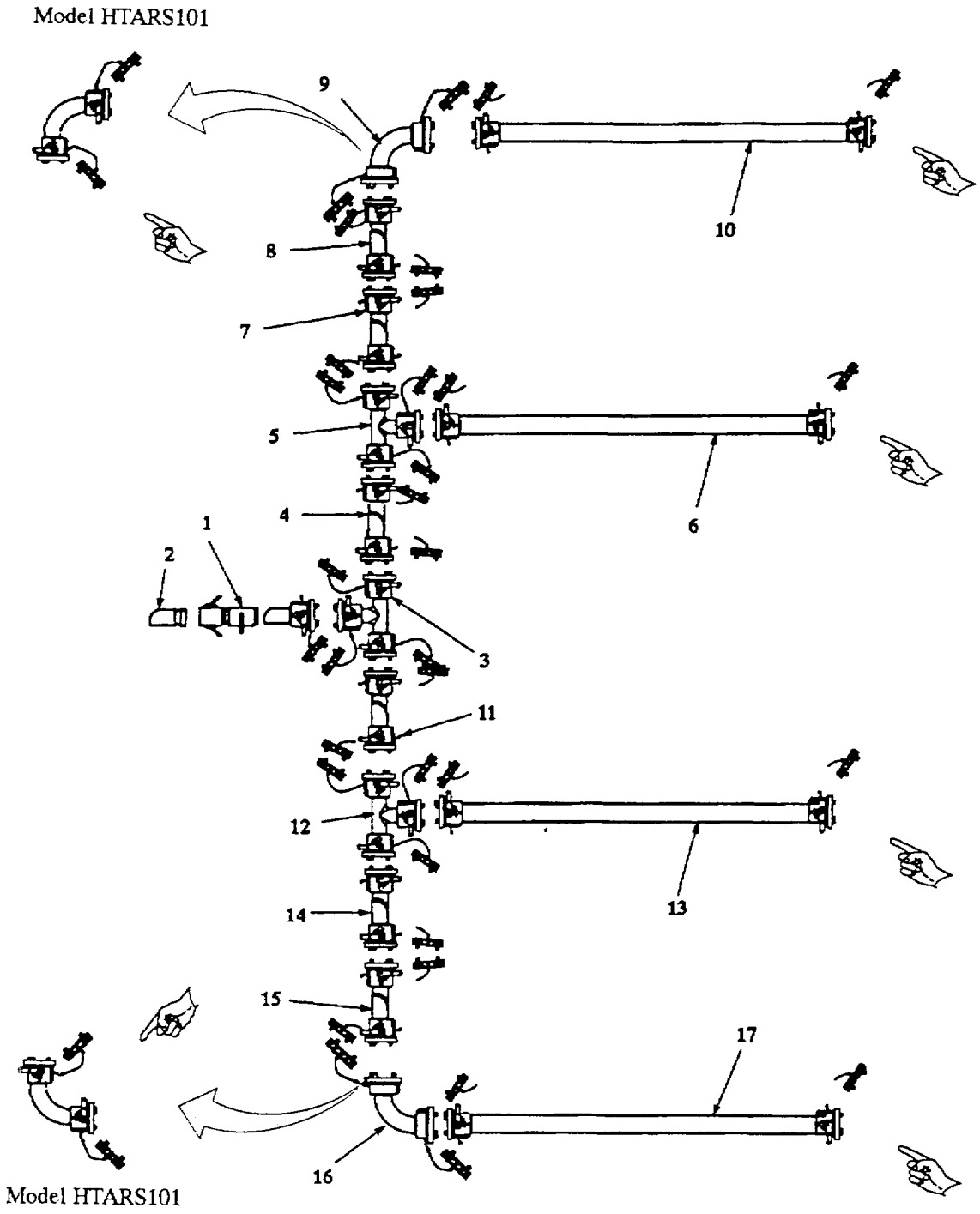

Figure 2-21. Fuel Hose Disassembly.

2-15. PREPARATION FOR MOVEMENT- cont.

(8) Disconnect fuel hose (13) from tee (12).

(9) Disconnect tee (12) from fuel hose (11).

(10) Disconnect fuel hose (11) from tee (3).

(11) Disconnect fuel hose (10) from elbow (9).

(12) Disconnect elbow (9) from fuel hose (8).

(13) Disconnect two fuel hoses (7 and 8) from tee (5).

(14) Disconnect fuel hose (6) from tee (5).

(15) Disconnect tee (5) from fuel hose (4).

(16) Disconnect fuel hose (4) from tee (3).

(17) Disconnect tee (3) from fuel hose (1).

(18) Disconnect quick disconnect end of fuel hose (1) from HEMTT tanker fuel outlet (2).

(19) Prepare HEMTT tanker for movement in accordance with TM 9-2320-279-10-1.

f. Rolling Fuel Hoses. Refer to figure 2-22.

NOTES

- **The following instructions apply to all fuel hoses used in the HTARS. Repeat these procedures for each fuel hose during fuel system disassembly.**
- **Hose straps have two loops. One loop is used as a handle to lift and carry hose; the other loop is wrapped over hose to prevent loss of hose strap.**
- **Drain residual fuel from hoses into a suitable container. Dispose of fuel in accordance with applicable regulations.**

(1) Stretch out fuel hose (1). Remove all twists so that hose lays flat.

(2) Fold fuel hose (1) in half so that dry break couplings (5 and 6) are positioned at one end of hose.

(3) Roll fuel hose (1) from folded end to dry break couplings (5 and 6). Keep hose halves alined so that a tight roll is obtained.

(4) Position hose strap (3) around rolled fuel hose (1).

(5) Place tag end of hose strap (3) through bottom of buckle (41, around slide (2) and back out buckle as shown.

2-15. PREPARATION FOR MOVEMENT cont.

(6) Pull tag end of strap (3) until roll is secure and strap is tight.

(7) Repeat steps (1) through (6) for all remaining fuel hoses.

g. CCR Nozzle. Prepare CCR nozzle for movement. Refer to TM 10-4930-248-13&P.

h. HEMTT Tanker. Prepare HEMTT tanker for movement. Refer to TM 9-2320-279-10-1.

i. Packing. No special packing instructions are required, however, use care to prevent damage to components in transport.

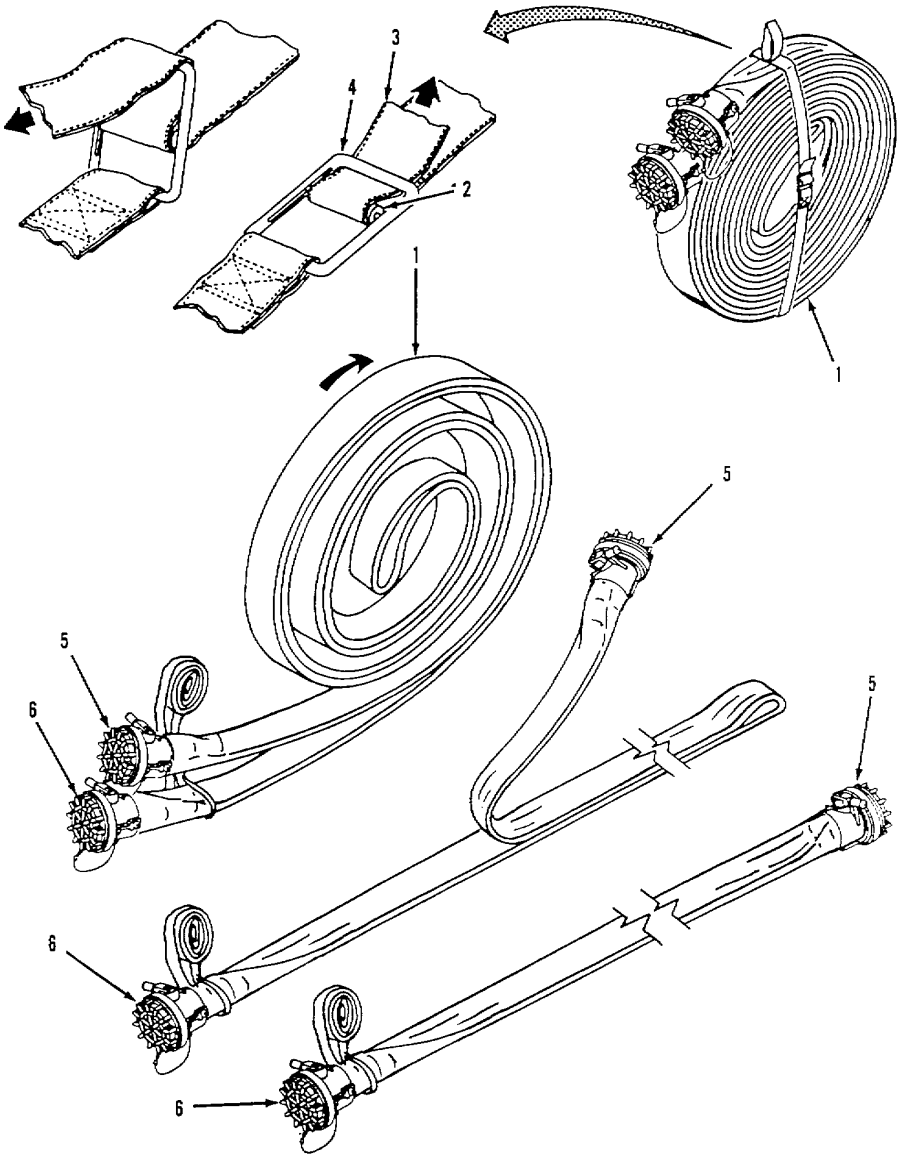

Figure 2-22. Rolling Fuel Hoses.

Section IV. OPERATION UNDER UNUSUAL CONDITIONS

2-16. OPERATION IN EXTREME COLD.

Observe the following precautions when operating the HTARS in extreme cold:

(1) Wear arctic mittens and rubber gloves when handling hardware. Bare hands can freeze to metal components.

WARNINGS

- **Do not operate fuel system in area of tents or shelters. Inhalation of petroleum fumes and vapors will result in serious illness or death.**
- **Do not operate heating equipment within 100 feet of fuel system. Ignition of fuel vapors can occur.**

(2) Remove snow, sleet or ice from fuel hose couplings and nozzles before operation.

2-17. OPERATION IN EXTREME HEAT.

Observe the following precautions when operating the fuel system in extreme heat:

WARNING

Do not operate fuel system in area of tents or shelters. Inhalation of petroleum fumes and vapors will result in serious illness or death.

(1) If possible, protect fuel system components from direct sunlight. Direct sunlight on fuel hoses will increase system fuel pressure.

(2) When not in operation, make sure 3-inch fuel supply hose valves are open to HEMTT tanker to vent expanding fuel.

2-18. OPERATIONS IN DUSTY OR SANDY AREAS.

Observe the following precautions when operating the HTARS in dusty or sandy areas:

WARNING

Do not operate fuel system in area of tents or shelters. Inhalation of petroleum fumes and vapors will result in serious illness or death.

(1) Make sure dust caps are installed on all open couplings and nozzles

(2) Do not lay fuel nozzles in dust or sand. Fuel nozzles may pick up dirt and contaminate aircraft fuel system.

(3) Carefully inspect fuel nozzles for accumulations of dust, dirt and sand before connecting to aircraft refueling adapters. Remove contaminants before refueling.

(4) Following operation in dusty or sandy areas, rinse all system components with clean, fresh water to remove dust, dirt and grit from nozzles and dry break couplings.

2-19. OPERATION IN SALT WATER AREAS.

WARNING

Do not operate fuel system in area of tents or shelters. Inhalation of petroleum fumes and vapors will result in serious illness or death.

Operation in salt water areas accelerates corrosion on bare metal surfaces. Following operation in salt water areas, rinse components with clean fresh water to remove salt spray and/or deposits. Do not allow salt water to remain on aluminum components.

2-20. EMERGENCY PROCEDURES.

WARNINGS

If a fuel spill occurs during refueling, immediately shut down the system, isolate the defective component(s) and clean up spilled fuel, Observe the following safety precautions and warnings to prevent injury to personnel and damage to the equipment:

- **Do not allow smoking within 500 feet of fuel spill.**
- **Wear protective goggles and gloves. Use fuel resistant gloves when handling system components due to toxic effects of some fuel additives. Avoid contact with skin, eyes, and clothes. If fuel contacts eyes, immediately flush eyes with clean fresh water and get medical attention.**
- **Avoid getting fuel on your body or clothing. Fuel can cause chemical burns on unprotected skin. If clothing becomes saturated with fuel, remove clothing immediately and wash your body with hot soapy water.**
- **Do not breathe fuel vapors. Refuel only in well-ventilated area. Vapors are toxic and can cause serious illness or death. If dizziness occurs, leave area and get fresh air. Get medical attention.**
- **Static discharge could ignite the fuel or cause an explosion of the fuel vapor. Cover fuel spill with dry soil to reduce rate of vaporization. Make sure a suitable fire extinguisher is charged and readily available in case of fire.**

a. In the event of a fuel hose rupture or component failure, immediately shut down the HEMTT tanker and fuel system (para 2-12f).

b. Isolate defective component by closing the nearest upline and downline valves.

c. Absorb or disperse spilled fuel. Refer to AR 200-1 and local standard operating procedures.

NOTE

If 3-inch fuel hose (from HEMTT tanker) and tees are serviceable, refueling operations may continue at reduced capacity by operating remaining refueling points.

c. Replace defective component (para 3-4).

d. Perform fuel system startup (para 2-12f).

2-21. DECONTAMINATION PROCEDURES.

a. As required, assist the supporting NBC unit in decontaminating the HTARS. Refer to FM 3-3, FM 3-4, and FM 3-5 for detailed decontamination procedures.

b. Refer to FM 10-70 for additional operating precautions following NBC attack.

CHAPTER 3

OPERATOR MAINTENANCE INSTRUCTIONS

Section I. LUBRICATION INSTRUCTIONS

Lubrication of the HTARS is limited to the HEMTT tanker. Lubricate this equipment in accordance with TM 9-2320-279-10-1.

Section II. OPERATOR TROUBLESHOOTING PROCEDURES

3-1. INTRODUCTION.

a. The troubleshooting table lists the common malfunctions which you may find during operation of the HTARS. You should perform the tests, inspections and corrective actions in the order they appear in the table.

b. This table cannot list all the malfunctions that may occur, all the tests or inspections needed to find the fault, or all the corrective actions needed to correct the fault. If the equipment malfunction is not listed or actions listed do not correct the fault, notify your supervisor.

c. Refer to TM 9-2320-279-10-1 for troubleshooting malfunctions on the HEMTT tanker.

d. Refer to TM 10-4930-248-13&P for troubleshooting malfunctions on the CCR nozzle.

3-2. MALFUNCTION INDEX.

3-3. TROUBLESHOOTING PROCEDURES.

Refer to table 3-1 for Operator Troubleshooting instructions.

3-3. TROUBLESHOOTING PROCEDURES - cont.

Table 3-1. Operator Troubleshooting.

WARNING
Be sure to read ALL Warnings in front of manual before troubleshooting.

MALFUNCTION 1. NO FUEL FLOW TO REFUELING POINT(S).

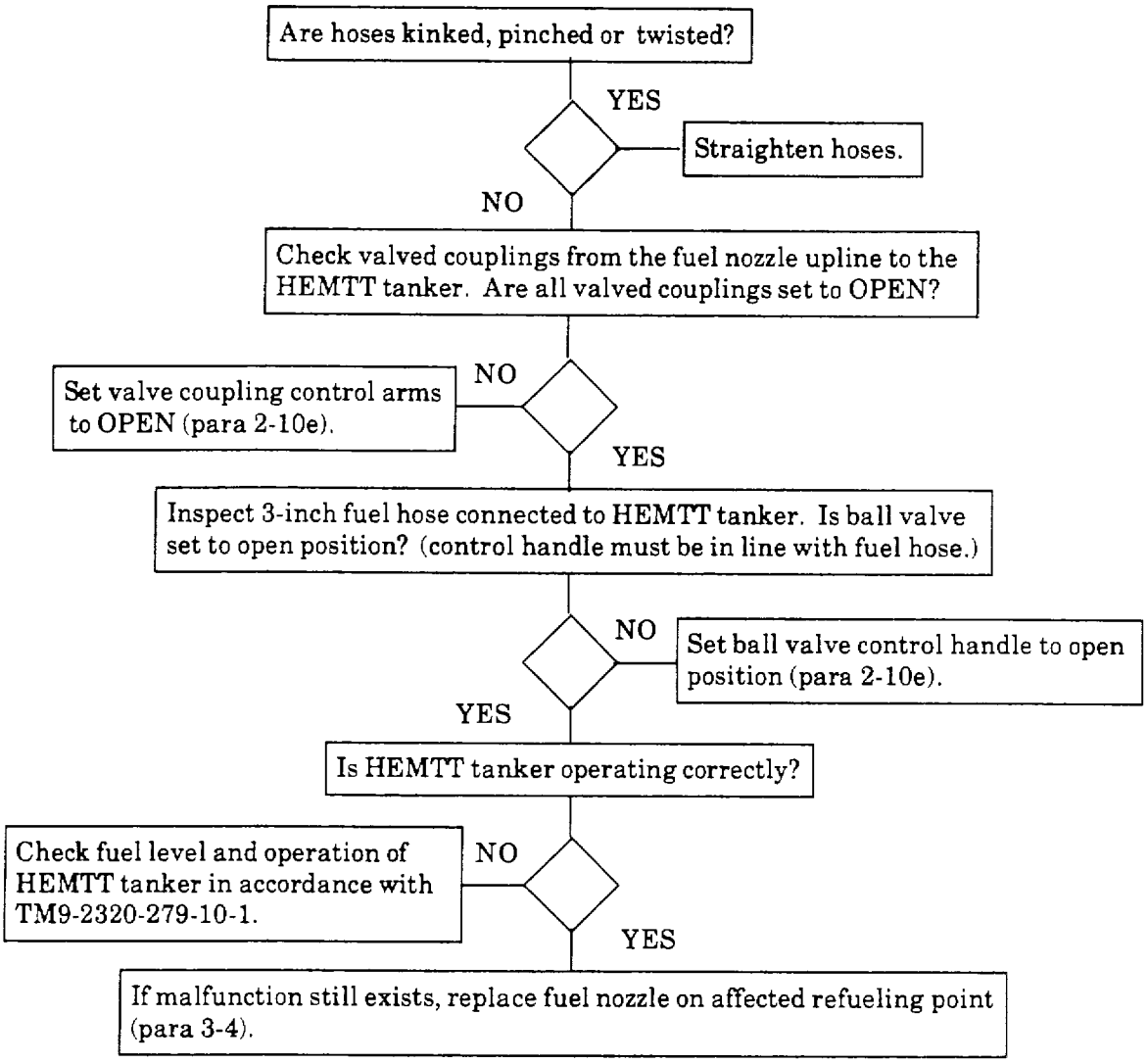

13-3. TROUBLESHOOTING PROCEDURES - cont. |

Table 3-1. Operator Troubleshooting - cont.

MALFUNCTION 2. LOW FUEL PRESSURE AT REFUELING POINT.

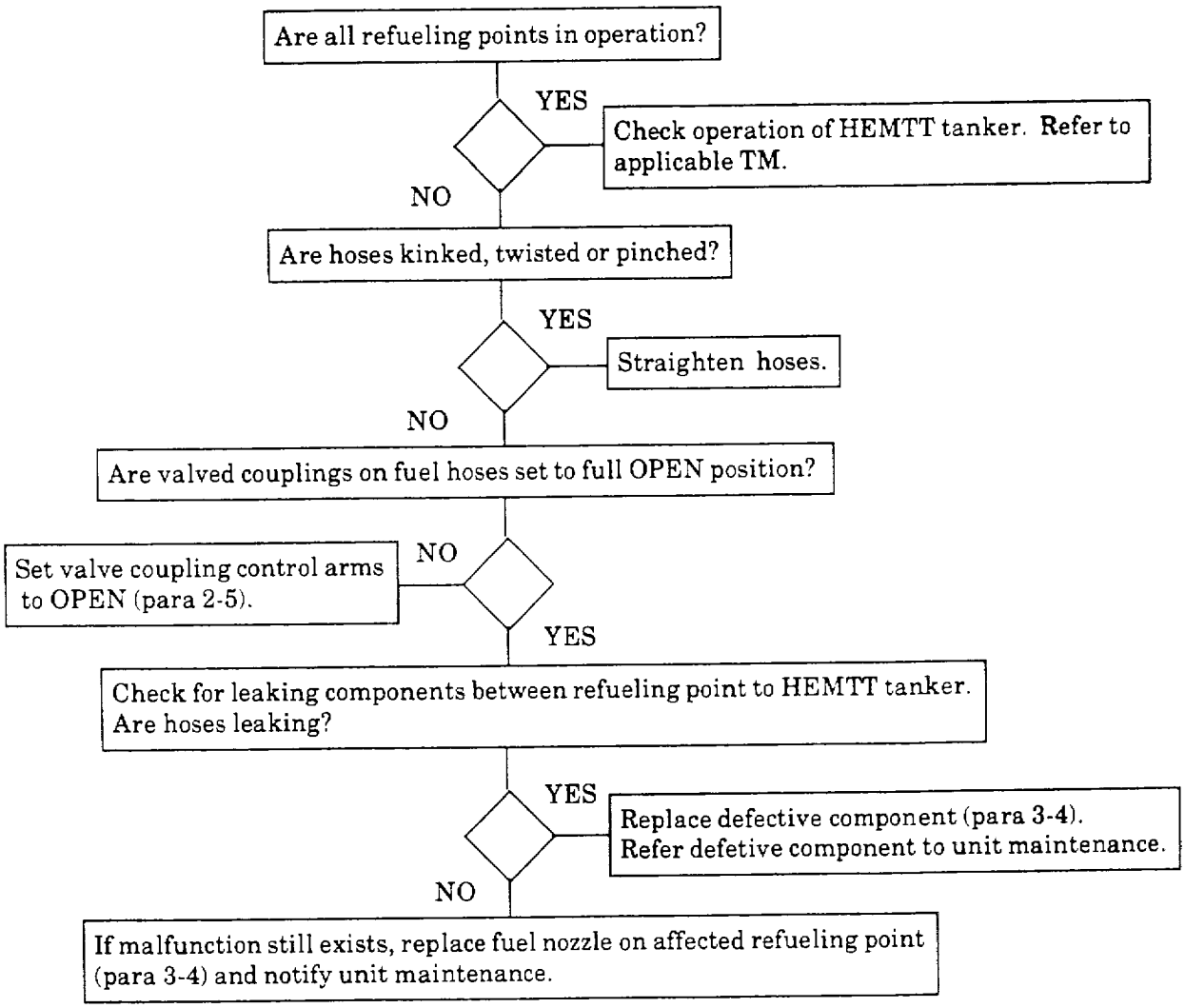

13-3. TROUBLESHOOTING PROCEDURES- cont.

Table 3-1. Operator Troubleshooting - cont.

MALFUNCTION 3. SINGLE POINT REFUELING NOZZLE (D1) LEAKS.

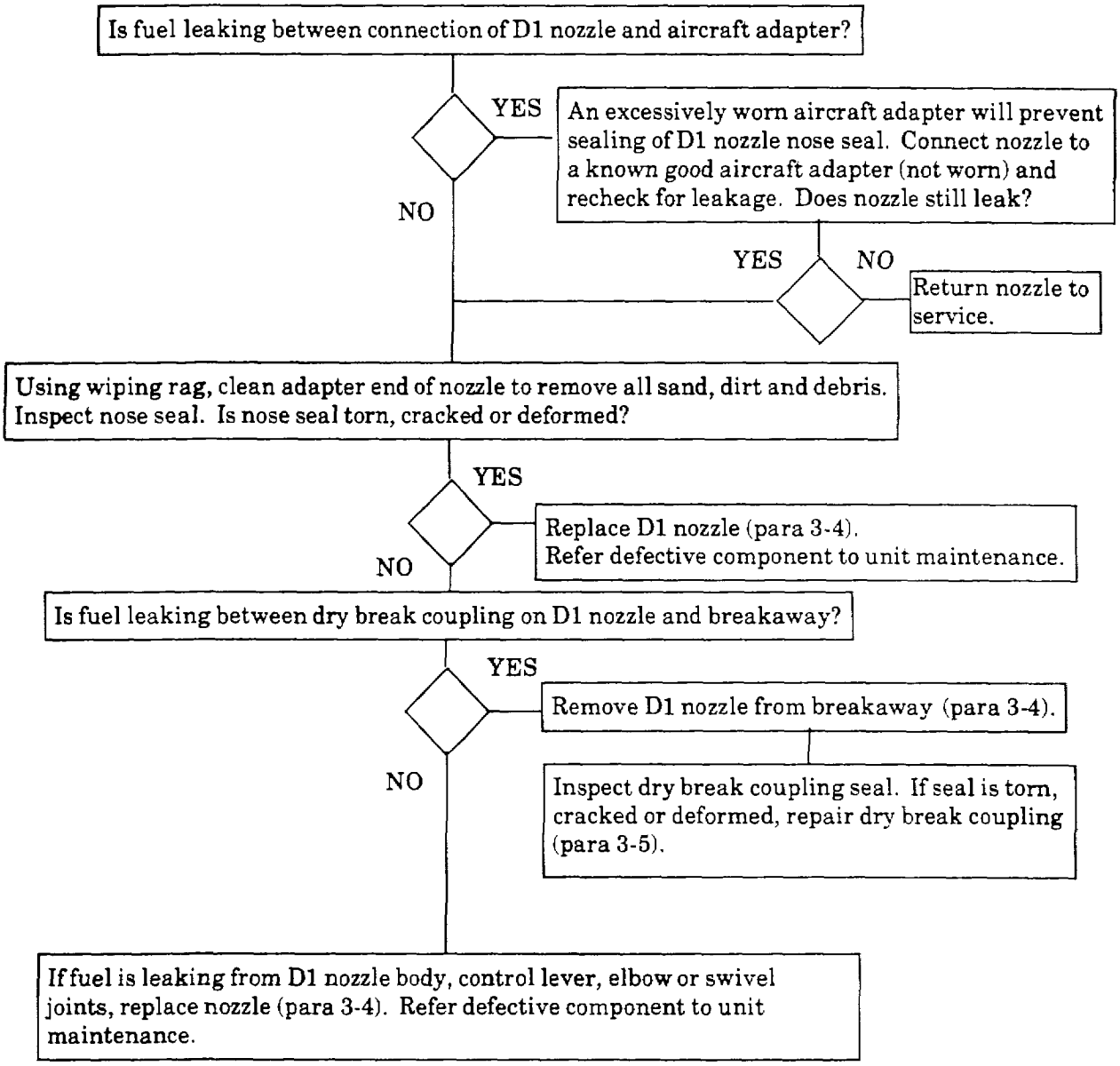

3-3. TROUBLESHOOTING PROCEDURES - cont.

Table 3-1. Operator Troubleshooting - cont.

MALFUNCTION 4. SINGLE POINT REFUELING NOZZLE (D1) WILL NOT CONNECT.

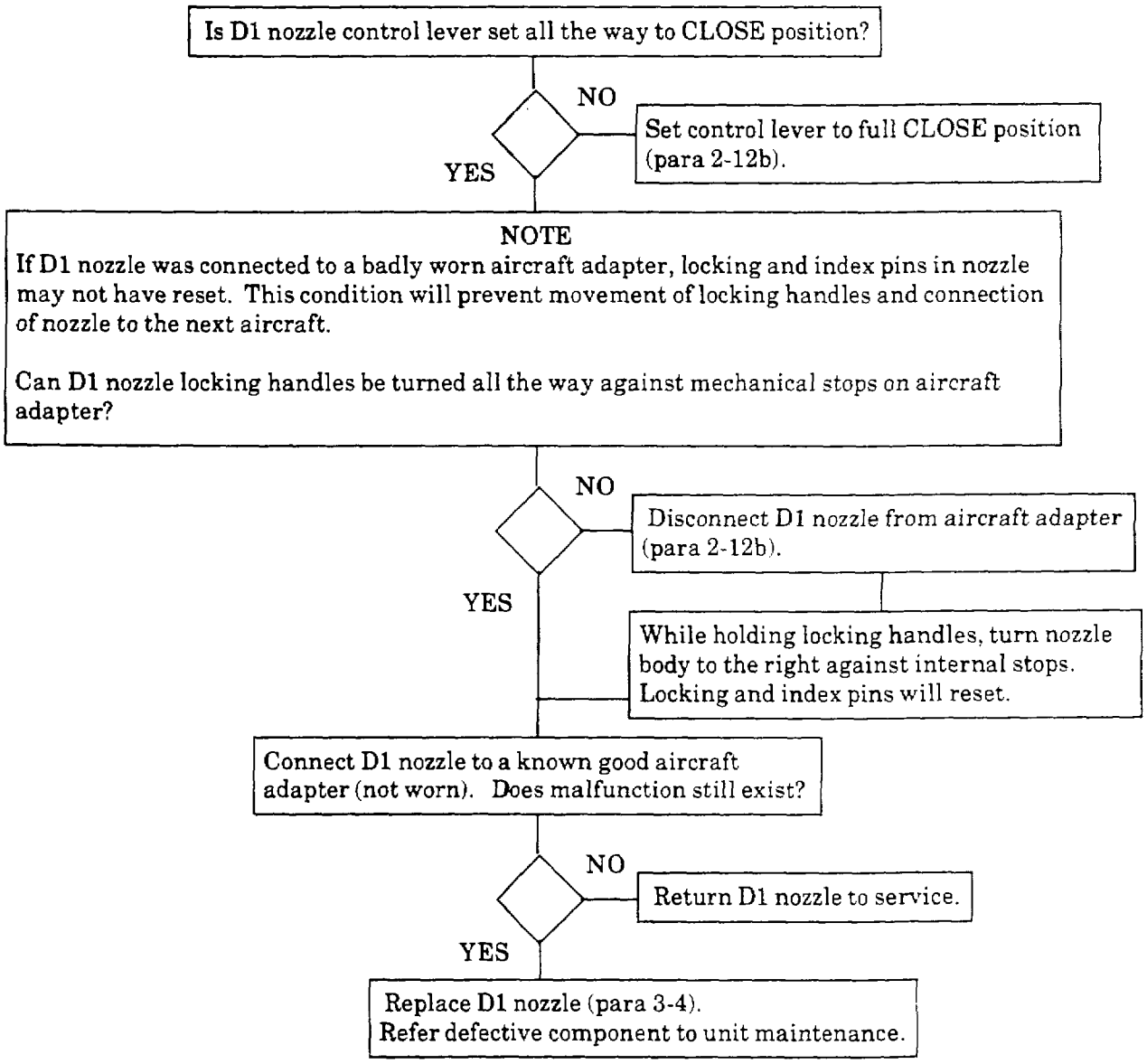

3-3. TROUBLESHOOTING PROCEDURES - cont.

Table 3-1. Operator Troubleshooting- cont.

MALFUNCTION 5. RECIRCULATION NOZZLE ASSEMBLY LEAKS.

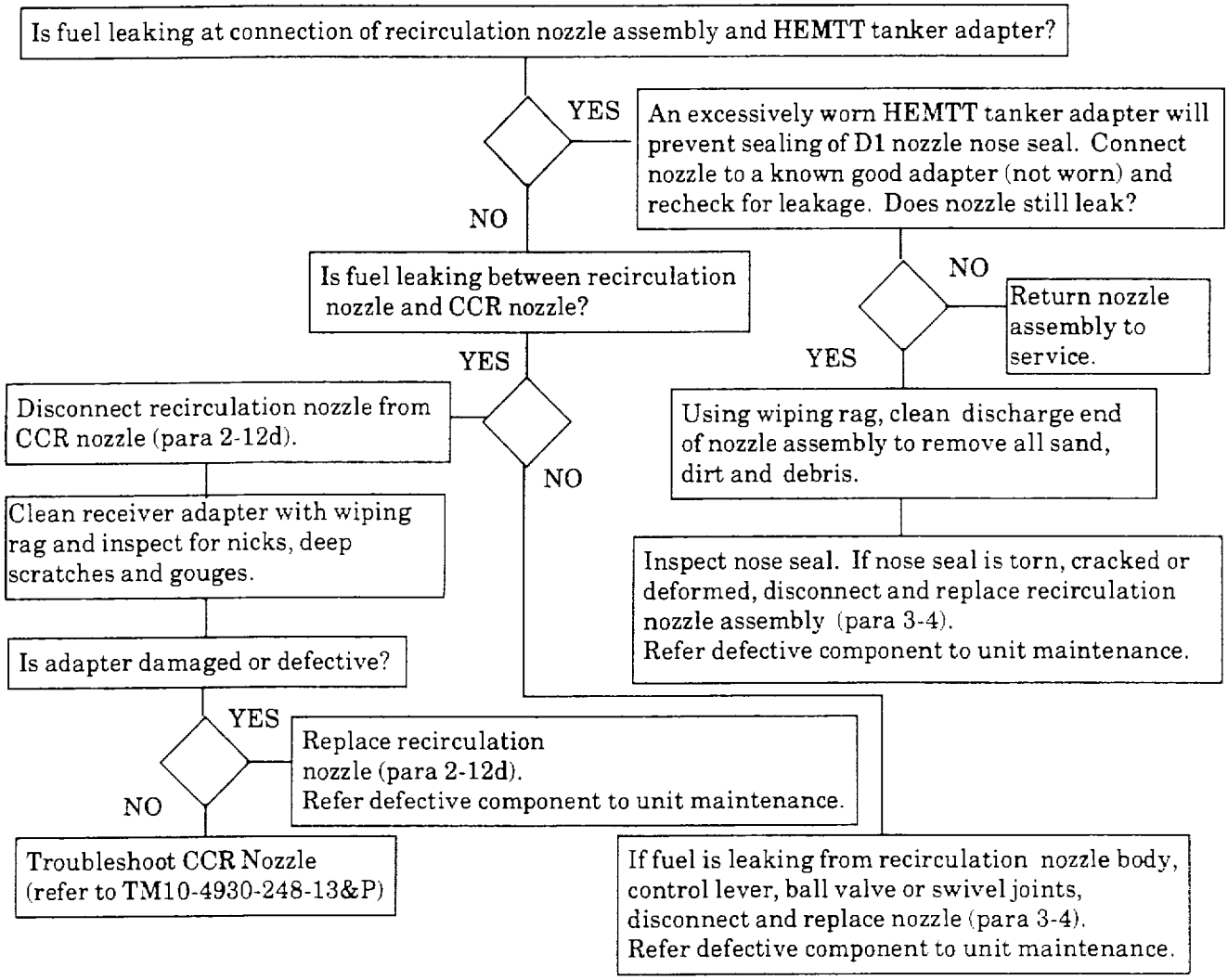

3-3. TROUBLESHOOTING PROCEDURES - cont.

Table 3-1. Operator Troubleshooting - cont.

MALFUNCTION 6. RECIRCULATION NOZZLE ASSEMBLY WILL NOT CONNECT TO TANKER.

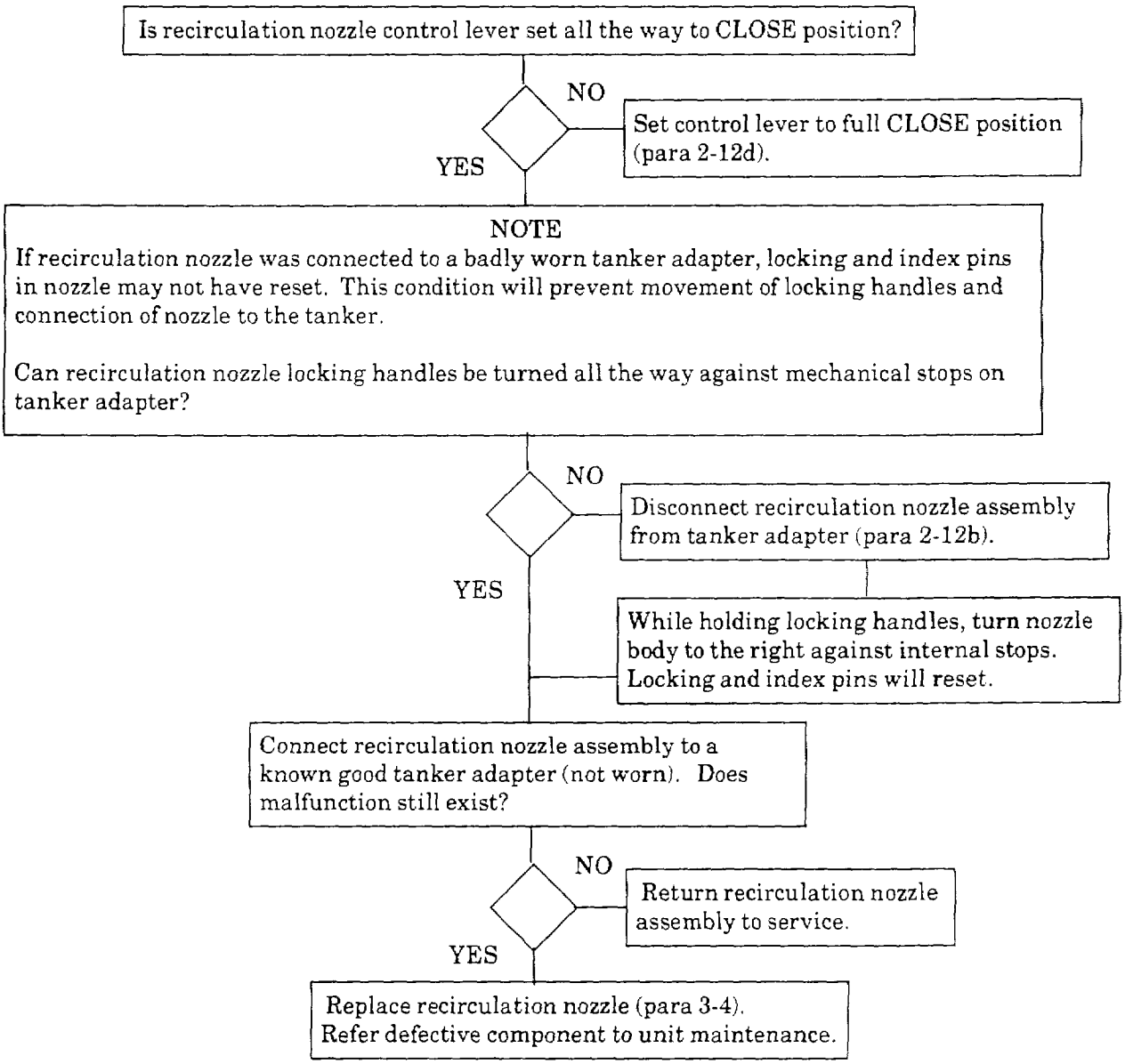

3-3. TROUBLESHOOTING PROCEDURES - cont.

Table 3-1. Operator Troubleshooting - cont.

MALFUNCTION 7. OPEN PORT NOZZLE ASSEMBLY LEAKS.

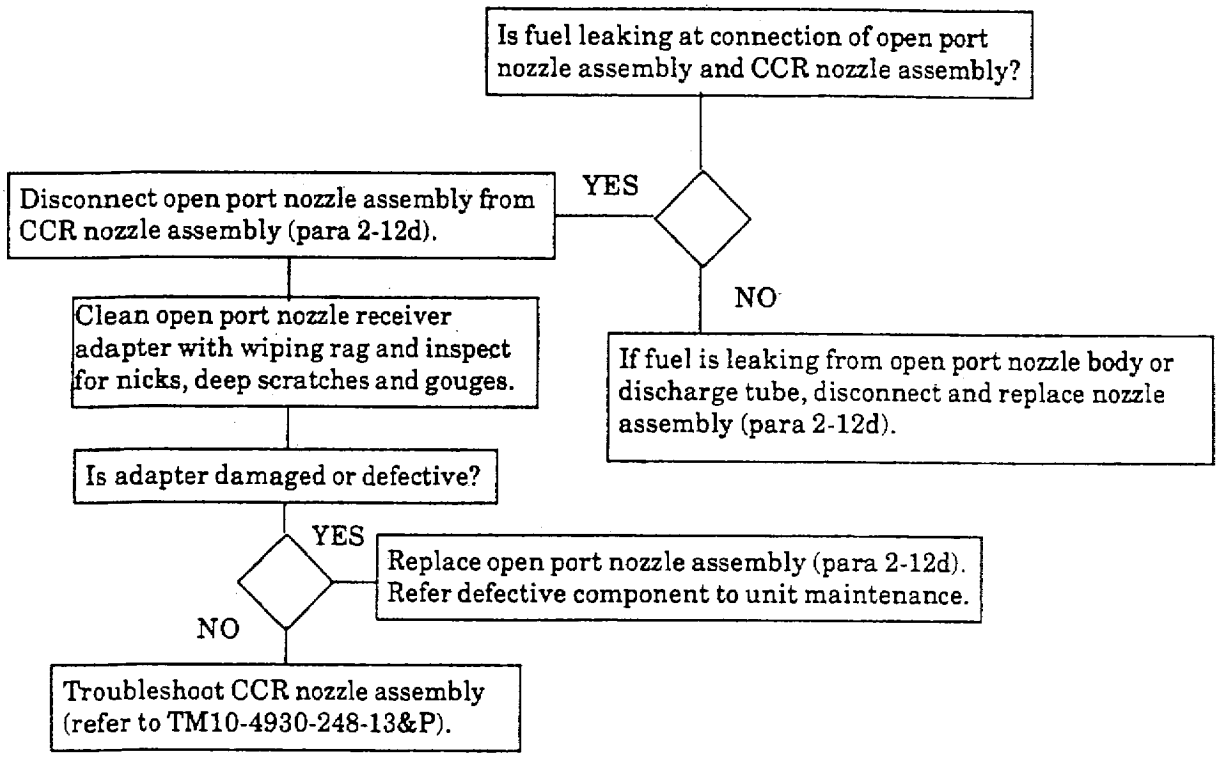

MALFUNCTION 8. DELETED

13-3. TROUBLESHOOTING PROCEDURES - cont.

Table 3-1. Operator Troubleshooting - cont.

MALFUNCTION 9. FUEL HOSE ASSEMBLY LEAKS.

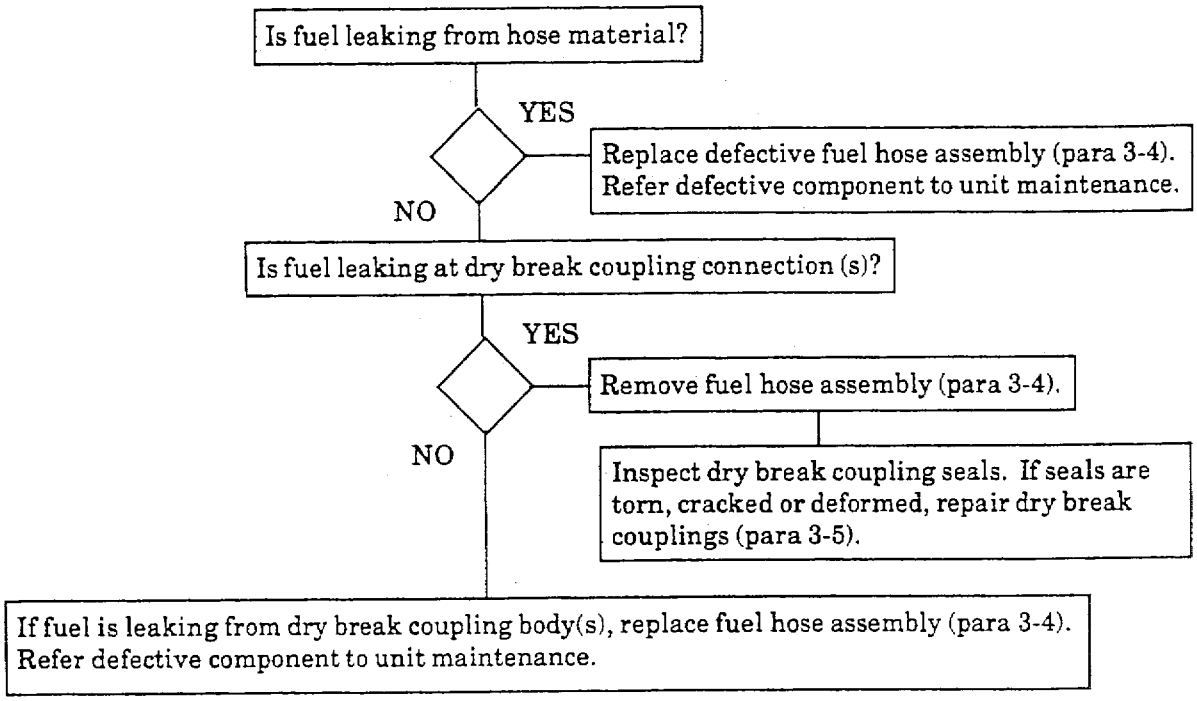

MALFUNCTION 10. ELBOW ASSEMBLY LEAKS.

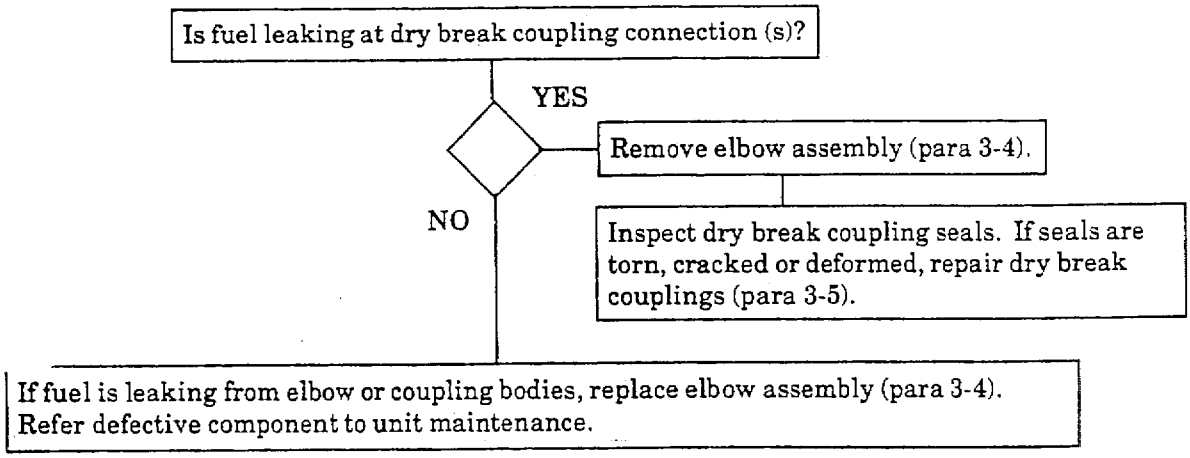

Table 3-1. Operator Troubleshooting - cont.

MALFUNCTION 11. TEE ASSEMBLY LEAKS.

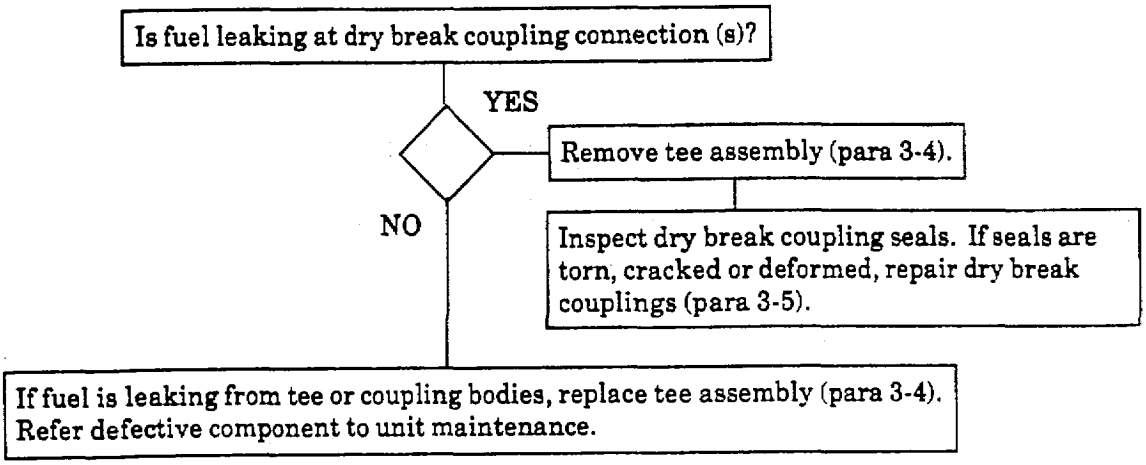

Section III. OPERATOR MAINTENANCE PROCEDURES

3-4. COMPONENT REPLACEMENT.

The following procedure is applicable to all components equipped with dry break couplings, including the closed circuit refueling nozzles, D1 nozzles, hose assemblies, elbows, tees and adapters.

Removal of defective components from the assembled fuel system is accomplished by closing the nearest upline and downline valved dry break couplings and disconnecting the couplings at both ends of the defective component. Installation of the replacement component is performed by positioning the new component in the fuel system, connecting the dry break couplings and opening the upline and downline valves.

This task consists of: a. Removal b. Installation

INITIAL SET-UP:
General Safety Instructions:

WARNING
To prevent injury to personnel and damage to the equipment, observe all safety precautions when working on fuel system. DO NOT smoke within 100 feet of fuel system.

Equipment Condition:
Fuel system shut down (para 2-12g)

NOTE
Replacement of a typical fuel system component is shown. Replacement of all components equipped with dry break couplings is similar.

a. Removal. Refer to figure 3-1.

(1) Defuel fuel hoses using the HEMTT tanker. Refer to TM 9-2320-279-10-1.

(2) Set control handle (1) on valved coupling (2) to CLOSE.

(3) Set control handle (3) on valved coupling (4) to CLOSE.

(4) Disconnect valved coupling (2) from valved coupling (4).

(5) Disconnect dust cap (5) from dust cap (6).

(6) Connect dust cap (5) to valved coupling (2).

(7) Connect dust cap (6) to valved coupling (4).

(8) Repeat steps (1) through (6) for other end of defective components (7).

(9) Remove defective component (7) from fuel system (8).

3-4. COMPONENT REPLACEMENT - cont.

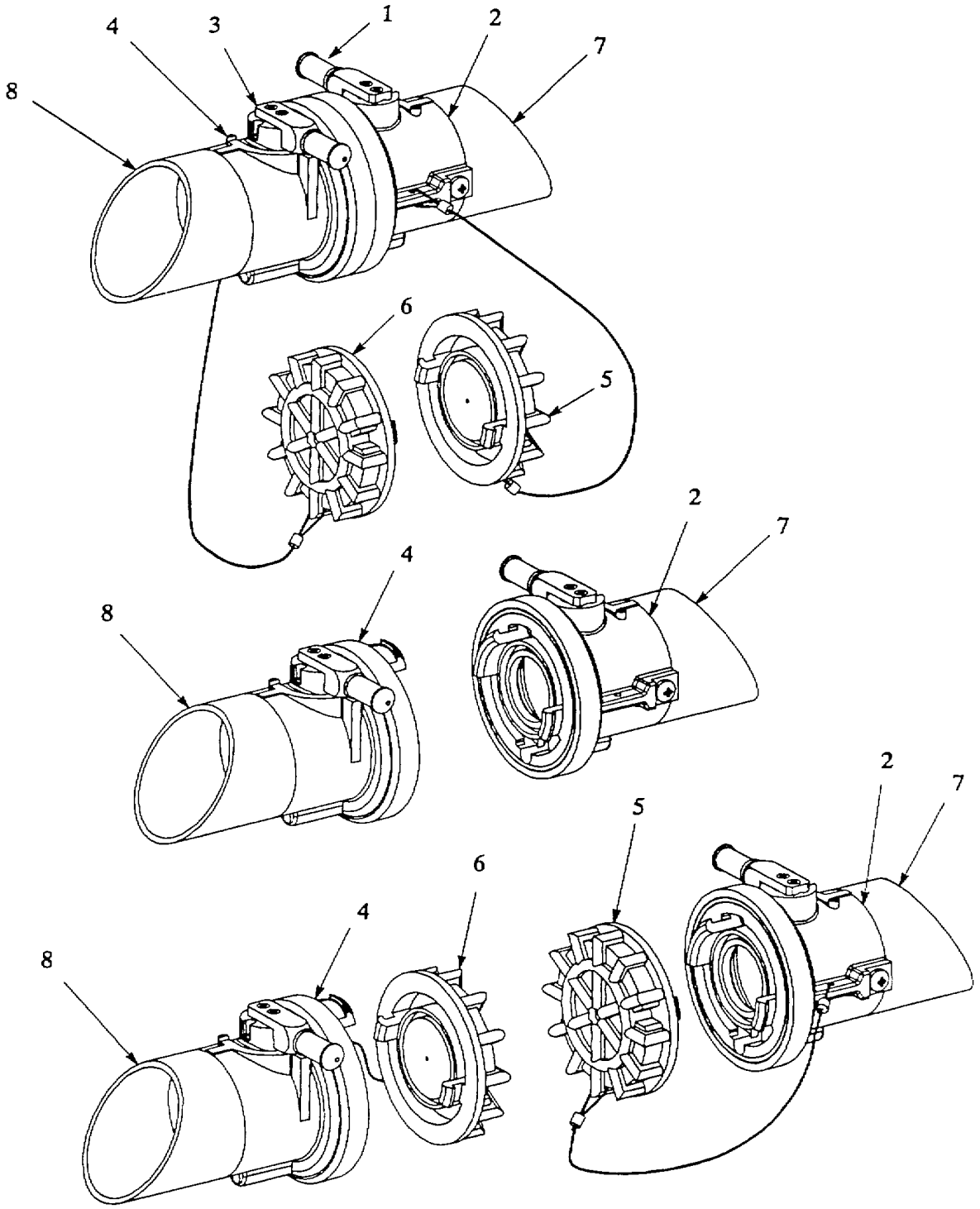

Figure 3-1. Component Removal.

3-4. COMPONENT REPLACEMENT - cont.

b. Installation. Refer to figure 3-2.

(1) Position replacement component (7) in fuel system (8).

(2) Disconnect dust cap (6) from valved coupling (4).

(3) Disconnect dust cap (5) from valved coupling (2).

(4) Connect dust cap (5) to dust cap (6).

(5) Connect valved coupling (3) to valved coupling (4).

(6) Set control handle (3) on valved coupling (4) to OPEN.

(7) Set control handle (1) on valved coupling (2) to OPEN.

(8) Repeat steps (2) through (7) for other end of replacement component (7).

(9) Startup fuel system (para 2-12f) and check for leaks at replaced component (8).

3-4. COMPONENT REPLACEMENT - cont.

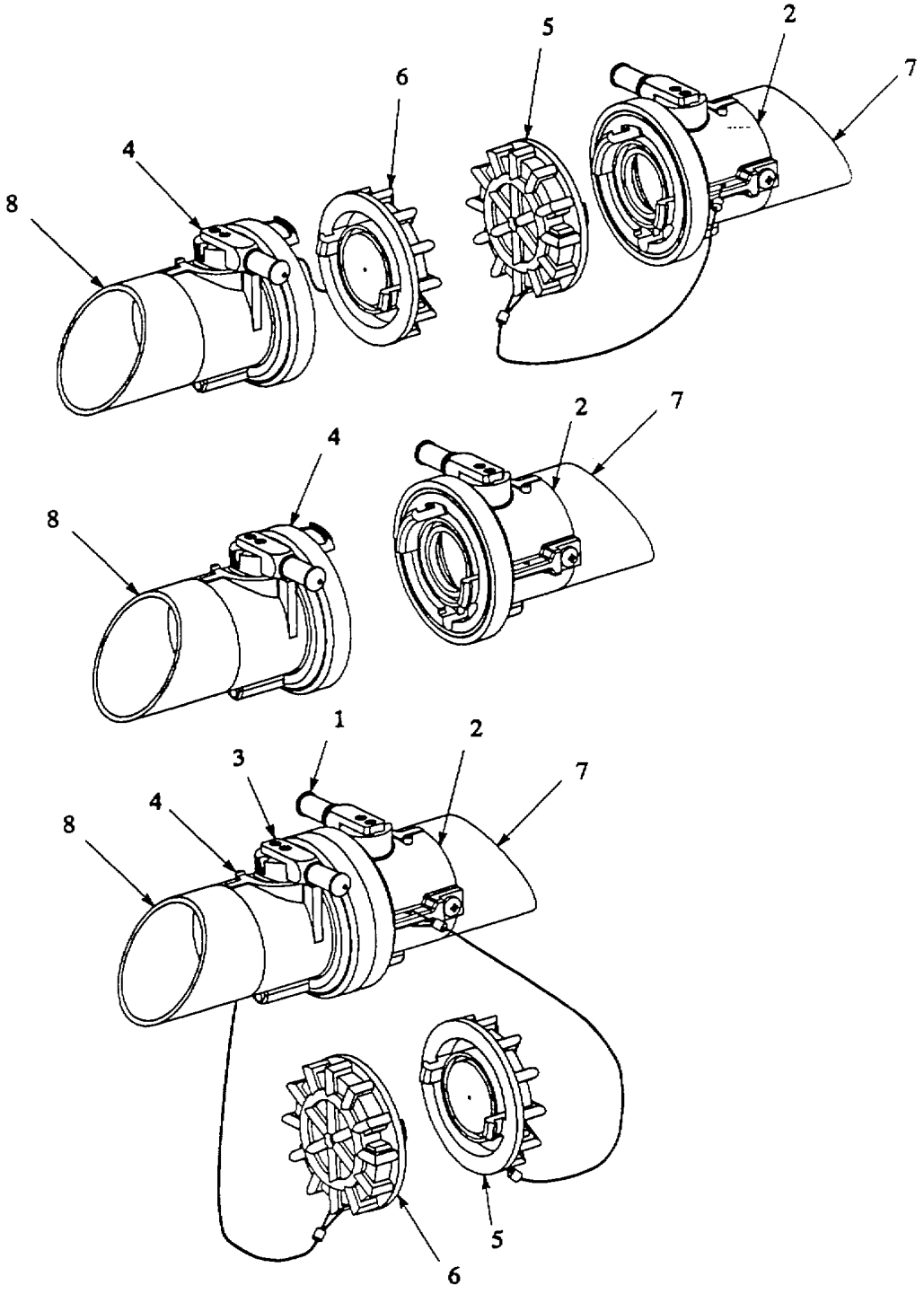

Figure 3-2. Component Installation.

3-5. DRY BREAK COUPLING REPAIR.

This task consists of: a. Removal b. Installation

INITIAL SET-UP

Equipment Condition:

Fuel system shutdown (para 2-12f)
Defective component removed from fuel system (para 3-2).

Materials Required:
Wiping rag (Item 2, App F)

General Safety Instructions:

WARNING

To prevent injury to personnel and damage to the equipment, observe all safety precautions when working on fuel system. DO NOT smoke within 100 feet of fuel system.

NOTES

The following procedures are used to perform emergency repairs when replacement gaskets are not available. Gaskets on the dry break coupling and dust cap are interchangeable. Repair of a typical valved dry break coupling is shown. Repair of non-valved dry break couplings is similar.

a. Removal. Refer to figure 3-3.

(1) Disconnect dust cap (1) from coupling (2).

(2) Remove seal (3) from dust cap (1).

(3) Remove defective seal (4) from coupling (2).

b. Installation. Refer to figure 3-3.

(1) Using clean wiping rag, remove grit, sand, and dirt from sealing surfaces of coupling (2).

(2) Position seal (3) (from dust cap) on seal seat (5).

(3) Work seal (3) onto seal seat (5). Make sure seal is seated evenly without wrinkles or bulges.

(4) Install component in fuel system (para 3-2).

(5) Startup fuel system (para 2-12c) and test coupling (2) for leaks.

3-5. DRY BREAK COUPLING REPAIR - cont.

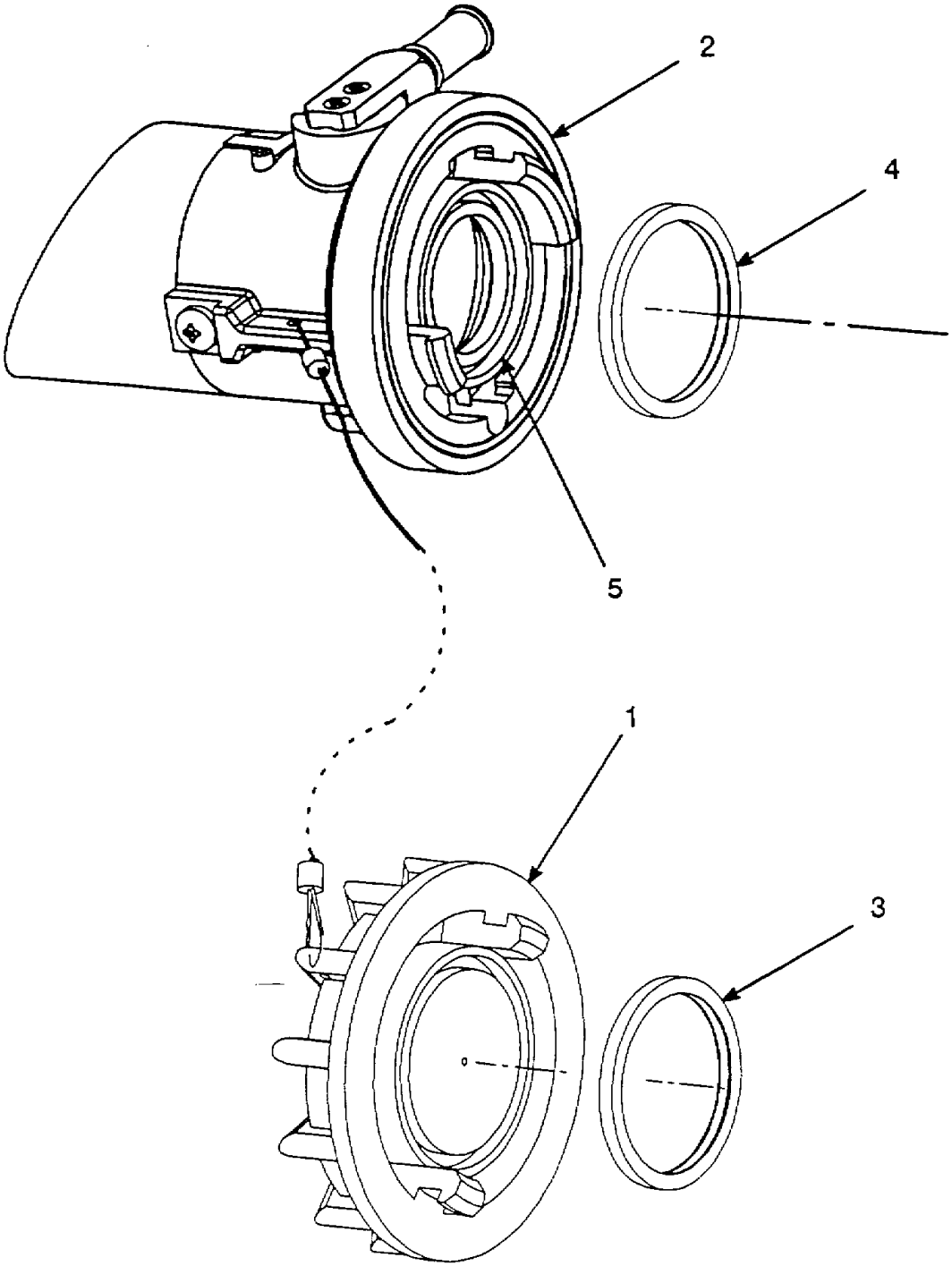

Figure 3-3. Dry Break Coupling Repair.

CHAPTER 4

UNIT MAINTENANCE INSTRUCTIONS

Section I. REPAIR PARTS, SPECIAL TOOLS, TEST, MEASUREMENT, AND DIAGNOSTIC EQUIPMENT (TMDE), AND SUPPORT EQUIPMENT

4-1. COMMON TOOLS AND EQUIPMENT.

For authorized common tools and equipment, refer to the Modified Table of Organization and Equipment (MTOE), CTA 50-970 or CTA 8-100, applicable to your unit. The General Mechanics Tools Kit, SC5180-90-CL-N26, is authorized for your use.

4-2. SPECIAL TOOLS, TMDE, AND SUPPORT EQUIPMENT.

Refer to the Maintenance Allocation Chart contained in Appendix B for maintenance tasks authorized at unit level maintenance and the TMDE and support equipment required to perform these tasks. Special tools required to maintain the HTARS components are listed in Appendix B, Section III.

4-3. REPAIR PARTS.

Repair parts are listed and illustrated in Appendix C, Repair Parts and Special Tools List for Unit and Direct Support maintenance.

Section II. SERVICE UPON RECEIPT

4-4. SITING.

a. Transport. The HTARS is designed to be packaged and transported on the HEMTT Tanker. Secure HTARS components to the transport vehicle before movement.

b. Site Selection. When selecting a site for installation of the fuel system, consider the overall operating area. Siting must include access to the aircraft staging area and provide adequate space to set up system hoses, and space for movement of tankers (minimum space required 100 x 300 feet). Site should be level, free of overhead obstructions and provide good drainage to prevent water damage. Avoid low areas where fuel vapors can collect. To prevent a hazard to personnel and equipment, site must be located downhill or downstream from other installations. For addition siting information, refer to FM 10-68 and FM10-69.

4-5. SHELTER REQUIREMENTS.

The fuel system does not require special sheltering during normal operation. Store unused fuel system components in the HEMTT tanker storage box to prevent damage and minimize routine maintenance.

4-6. CHECKING UNPACKED EQUIPMENT.

a. Unpacking Fuel System Equipment. Components of the HTARS are packaged and shipped in cardboard boxes or crates. Where possible, save packaging materials for reuse. Use care when unpacking to prevent damage to fragile components. This manual addresses installation and use of all components, but you may not need to unpack all of them to perform your mission.

b. Processing Unpacked Equipment.

(1) Remove all tape, paper wrapping, plastic sheeting and packing materials from the HTARS components.

(2) Inspect stencils, markings and information plates. All items should be clear and readable.

(3) Inspect all components to make sure they are in serviceable condition.

(4) Inspect the equipment for any damage incurred during shipment. If the equipment has been damaged, report the damage on SF 364, Report of Discrepancy.

(5) Refer to the TM10-4930-248-13&P for processing and servicing the CCR nozzle.

(6) Check equipment against the packing slip to see if the shipment is complete. Report all discrepancies in accordance with the instructions of DA Pam 738-750 or DA Pam 738-751 as applicable.

(7) Check to see if the equipment has been modified.

Section III. UNIT PREVENTIVE MAINTENANCE CHECKS AND SERVICES (PMCS)

4-7. GENERAL.

To ensure that the HTARS is ready for use at all times, it must be inspected systematically so that defects may be discovered and corrected before they result in serious damage or equipment failure.

4-8. PMCS PROCEDURES.

a. Your Preventive Maintenance Checks and Services, Table 4-1, lists inspections and care required to keep your equipment in good operating condition.

b. The "INTERVAL" column of Table 4-1 tells you when to do a certain check or service.

c. The "LOCATION, ITEM TO CHECK/SERVICE" column of Table 4-1 tells you the name of the item to be checked or serviced and where the item is located.

d. The "PROCEDURE" column of Table 4-1 tells you how perform the required checks and services. Follow these instructions carefully.

4-9. PMCS TABLE.

The necessary preventive maintenance services to be performed are listed and described in Table 4-1. Defects discovered during operation of the system should be corrected as soon as possible. All deficiencies and shortcomings will be recorded, together with the corrective action taken, on DA Form 2404 (Equipment Inspection and Maintenance Worksheet) as soon as possible.

Table 4-1. Unit Preventive Maintenance Checks and Services for Model HTARS100.

Item No.	Interval	Location Item Check/Service	Procedure
1	Monthly	All Fuel Hoses	Using a multimeter, test fuel hose for broken, or disconnected internal ground cable as follows: (1) Place multimeter leads against metal surfaces of both couplings. (2) Check for continuity between couplings. Continuity must exist. If continuity does not exist, hose is defective.

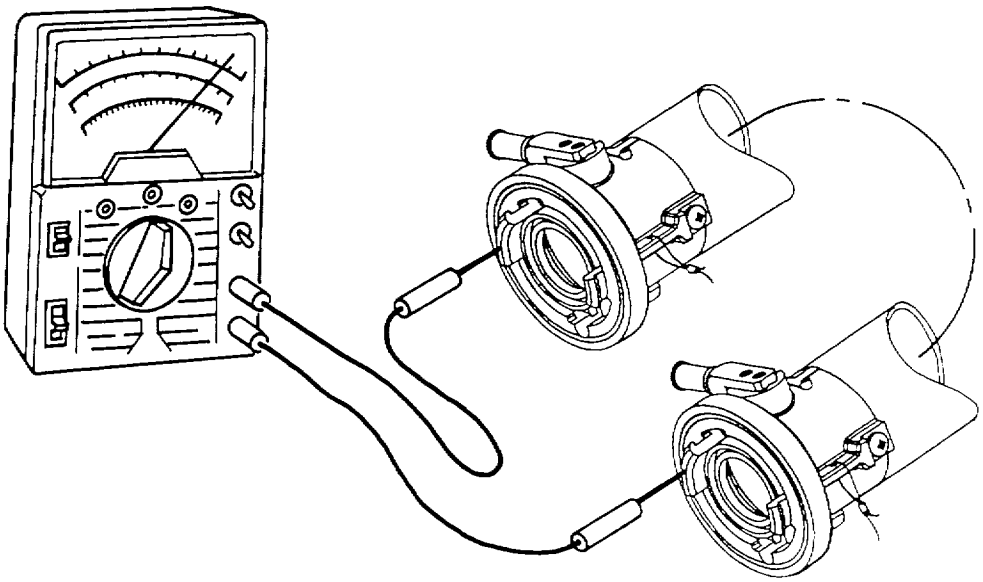

Section IV. UNIT MAINTENANCE PROCEDURES

4-10. GENERAL.

This section contains instructions for performing unit level maintenance on the HTARS.

4-11. PERSONAL SAFETY.

To ensure safety of personnel, proper care should be used when lifting or transporting HTARS components

Personnel must remove all items of jewelry (rings, bracelets, watches, necklaces etc) and loose clothing before working on the equipment. Jewelry and loose clothing can get caught in moving equipment and result in injury to personnel. Jewelry can cause electrical shorts or severe injury when working around electrical equipment.

When performing maintenance on the HTARS, keep in mind that the purpose of the equipment is to distribute flammable liquids. Your work space must be well ventilated to prevent the build-up of vapors and fumes. Make sure a fire extinguisher is available in the event of a fire.

Operate HTARS components after performing maintenance to ensure repairs have been performed correctly and item can be returned to service.

Observe the following precautions when working on fuel handling components:

- If a fuel spill occurs, clean it up immediately. Dispose of fuel soaked rags in accordance with applicable regulations and standard operating procedure.

- Do not allow smoking within 100 feet. Fuel vapors are extremely flammable. Post NO SMOKING signs. Do not work on fuel handling components near open flame or excessive heat. Death or injury could result from exploding or burning fuel. Suitable and properly charged fire extinguishers must be available at all times.

- Wear protective goggles and gloves. Use fuel resistant gloves when handling components due to toxic effects of some fuel additives. Avoid contact with skin, eyes, and clothes. If fuel contacts eyes, immediately flush eyes with clean fresh water and get medical attention.

- Avoid getting fuel on your body or clothing. Fuel can cause chemical burns on unprotected skin. If clothing becomes saturated with fuel, remove clothing immediately and wash your body with hot soapy water.

- Do not breathe fuel vapors. Work only in well-ventilated area. Vapors are toxic and can cause serious illness or death. If dizziness occurs, leave area and get fresh air. Get medical attention.

- Static discharge can ignite fuel or cause an explosion of the fuel vapor. Make sure all electrical equipment is properly connected.

4-12. PROPER EQUIPMENT.

Obtain proper equipment before beginning maintenance. This includes hand tools and/or special tools, receptacles for storing small parts, expendable materials and mandatory replacement parts required by the maintenance task.

4-13. (MODEL HTARS100) SINGLE POINT REFUELING NOZZLE (D1) ASSEMBLY REPAIR.

This task consists of:	a. Disassembly	b. Cleaning	c. Inspection
	d. Repair	e. Assembly	

INITIAL SET-UP

Tools:
General Mechanics Tool Kit (App B, Sect III, Item 1)
Automotive Shop Set (App B, Sect III, Item 2)
Equipment Condition:
D1 nozzle removed from fuel system (para 3-4a)
Material/Parts:
Silicone Compound (Item 3, App F)
Cleaning Solvent (Item 1, App F)
Wiping Rag (Item 2, App F)
Slip Ring (Item 16, App J)
Preformed Packing (Item 15, App J)
Preformed Packing (Item 16, App J)
Preformed Packing (Item 17, App J)
Self Locking Nut (2) (Item 18, App J)
Self Locking Socket Screw (2) (Item 19, App J)
Preformed Packing (Item 20, App J)
Self Locking Nut (6) (Item 21 , App J)

a. Disassembly. Refer to figure 4-1.

NOTES

- **Disassemble nozzle only to the extent required to replace defective items.**
- **Ensure that all parts identified as mandatory replacement parts are discarded and replaced with new components.**

(1) Remove six self locking nuts (1), flat washers (2), screws (3), and flat washers (4).

(2) Separate coupling adapter (5) from inlet elbow (13), and remove preformed packing (6).

(3) Remove screw (7) and attached preformed packing (8) from body (14).

NOTE

To prevent loss of balls and aid assembly, place a suitable container under body opening. Catch all balls as they fall from body.

(4) Position body (14) so that opening for balls (9) is pointing down.

(5) Rotate inlet elbow (13) back and forth on body (14) until 39 balls (9) are removed.

(6) Separate inlet elbow (13) from body (14).

CAUTION

Slip ring must be cut to be removed. Use care not to damage sealing surfaces of inlet adapter.

(7) Cut slip ring (11) from inlet elbow (13) and remove preformed packing (12).

4-13. (MODEL HTARS100) SINGLE POINT REFUELING NOZZLE (D1) ASSEMBLY REPAIR - cont.

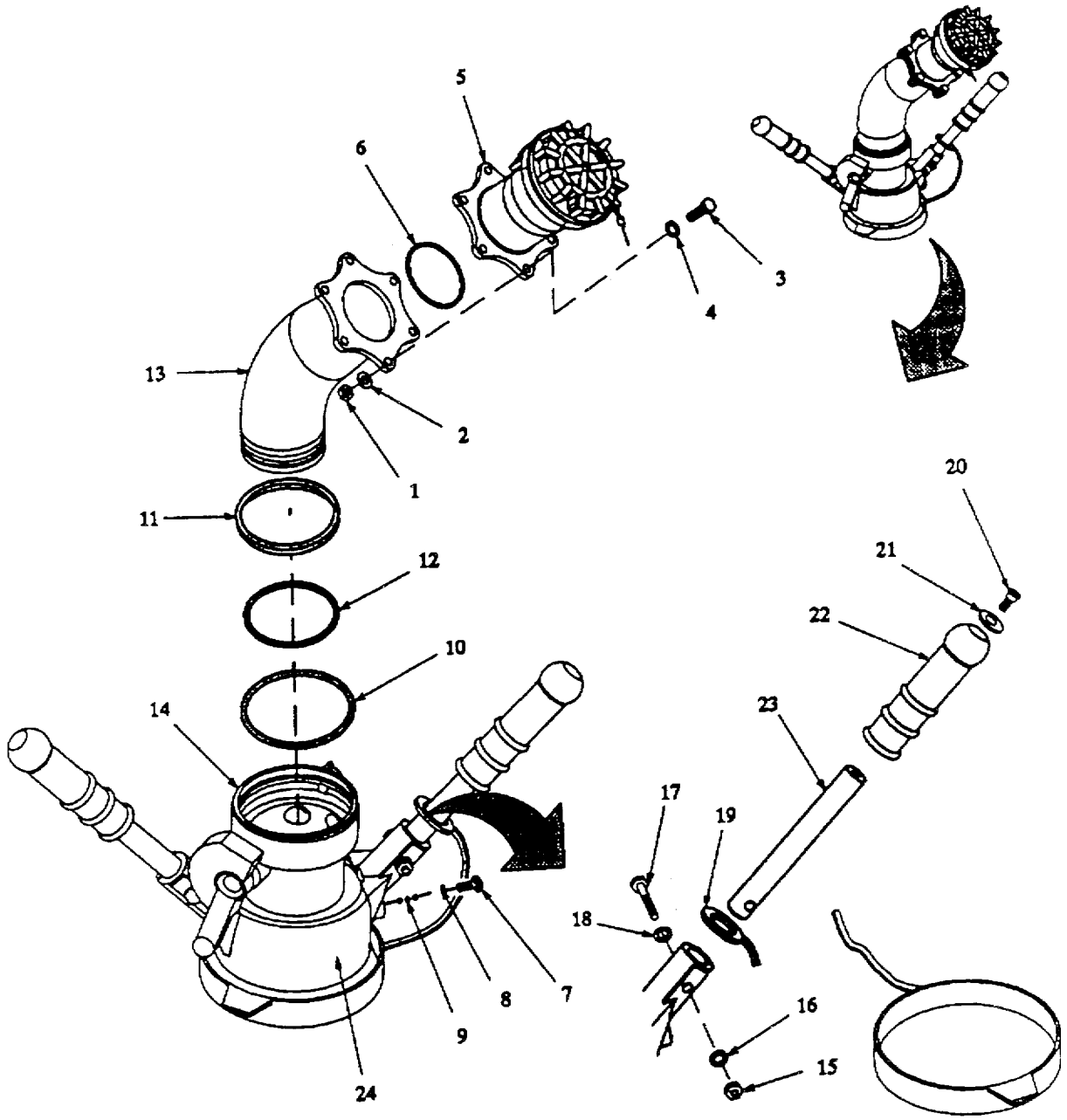

Figure 4-1. Pressure Fuel Servicing Nozzle (D1) Repair.

4-13. (MODEL HTARS100) SINGLE POINT REFUELING NOZZLE (D1) ASSEMBLY REPAIR - cont.

(8) Remove self locking nut (15), flat washer (16), screw (17), and flat washer (18) from collar (24).

(9) Remove handle (23) from collar (24).

(10) Slide cap (19) off of handle (23).

NOTE
Old grip must be cut from handle. Do not remove unless defective.

(11) Place handle (23) in vise.

(12) Remove self locking socket screw (20) and flat washer (21) from inside grip (22).

(13) Cut grip (22) from handle (23).

(14) Repeat steps (8) through (13), except step (11), for other handle.

b. Cleaning.

WARNING
Dry cleaning solvent, P-D-680, TYPE III, is potentially dangerous to personnel and property. Eye and skin protection is required. Avoid repeated and prolonged skin contact. Wash hands immediately after exposure. Do not use near open flame or excessive heat. Use only in areas with good ventilation.

Using wiping rags and cleaning solvent, remove dirt and contaminants from all components.

c. Inspection. Refer to figure 4-1.

(1) Inspect inlet elbow (13) for cracks and corrosion. Check for scratches and abrasion at all sealing surfaces.

(2) Inspect body (14) for cracks, corrosion and damaged or missing parts.

(3) Inspect coupling adapter (5) for cracks, missing components and corrosion.

(4) Inspect collar (24) for cracks and corrosion.

d. Repair. Replace damaged or defective components. Replace all mandatory replacement parts. Repair non-valved dry break coupling on coupling adapter (para 4-14).

e. Assembly. Refer to figure 4-1.

NOTE
Ensure that all parts identified as mandatory replacement parts are discarded and replaced with new components.

(1) Place handle (23) in vise.

4-13. (MODEL HTARS100) SINGLE POINT REFUELING NOZZLE (D1) ASSEMBLY REPAIR - cont.

(2) Push grip (22) onto handle (23).

(3) Install flat washer (21) and self locking socket screw (20) in grip (22).

(4) Slide cap (19) onto handle (23).

(5) Remove handle (23) from vise and position in collar (24).

(6) Install flat washer (18), screw (17), flat washer (16) and self locking nut (15) in collar (24).

(7) Repeat steps (1) through (6), except step (4), for other handle.

(8) Apply a light coat of silicone compound to preformed packings (6, 8, 10 and 12) to aid installation.

(9) Install preformed packing (12) and slip ring (11) on inlet elbow (13).

CAUTION

To prevent premature failure of recirculation nozzle, make sure packing is installed in correct seat. Do not put packing in ball race.

(10) Install preformed packing (10) in seat of body (14).

(11) Push inlet elbow (13) into body (14).

(12) Position body (14) so that opening for balls (9) is pointing up.

(13) While pushing inlet elbow (13) into body (14), install 39 balls (9). Turn inlet elbow back and forth in body to aid installation.

(14) Install preformed packing (8) on screw (7).

(15) Install screw (7) in body (14).

(16) Position preformed packing (6) on inlet elbow (13).

(17) Position coupling adapter (5) on inlet elbow (13).

(18) Install six flat washers (4) screws (3), flat washers (2) and self locking nuts (1). Tighten nuts evenly in a cross pattern.

(19) Install D1 nozzle assembly in fuel system (para 2-12b).

(20) Start up fuel system (para 2-12g) and check D1 nozzle assembly for leaks.

4-13A. (MODEL HTARS101) SINGLE POINT REFUELING NOZZLE (D1) ASSEMBLY REPAIR.

This task consists of:	a. Disassembly	b. Cleaning	c. Inspection
	d. Repair	e. Assembly	

INITIAL SET-UP

Tools:
General Mechanics Tool Kit (App B, Sect III, Item 1)
Automotive Shop Set (App B, Sect III, Item 2)
Equipment Condition:
D1 nozzle removed from fuel system (para 3-4a)
Material/Parts:
Silicone Compound (Item 3, App F)
Cleaning Solvent (Item 1, App F)
Wiping Rag (Item 2, App F)
Slip Ring (Item 16, App J)
Preformed Packing (Item 15, App J)
Preformed Packing (Item 16, App J)
Preformed Packing (Item 17, App J)
Self Locking Nut (2) (Item 18, App J)
Self Locking Socket Screw (2) (Item 19, App J)
Preformed Packing (Item 20, App J)
Self Locking Nut (6) (Item 21 , App J)

a. Disassembly. Refer to figure 4-1A.

NOTES

- **Disassemble nozzle only to the extent required to replace defective items.**
- **Ensure that all parts identified as mandatory replacement parts are discarded and replaced with new components.**

(1) Remove six self locking nuts (1), flat washers (2), screws (3), and flat washers (4).

(2) Separate coupling adapter (5) from inlet elbow (13), and remove preformed packing (6).

(3) Remove screw (7) and attached preformed packing (8) from regulator (14).

NOTE

To prevent loss of balls and aid assembly, place a suitable container under body opening. Catch all balls as they fall from body.

(4) Position regulator (14) so that opening for balls (9) is pointing down.

(5) Rotate inlet elbow (13) back and forth on regulator (14) until 39 balls (9) are removed.

(6) Separate inlet elbow (13) from regulator (14).

CAUTION

Slip ring must be cut to be removed. Use care not to damage sealing surfaces of inlet adapter.

(7) Cut slip ring (11) from inlet elbow (13) and remove preformed packing (12).

(8) Remove packing (10) from regulator (14).

4-13A. (MODEL HTARS101) SINGLE POINT REFUELING NOZZLE (D1) ASSEMBLY REPAIR - cont.

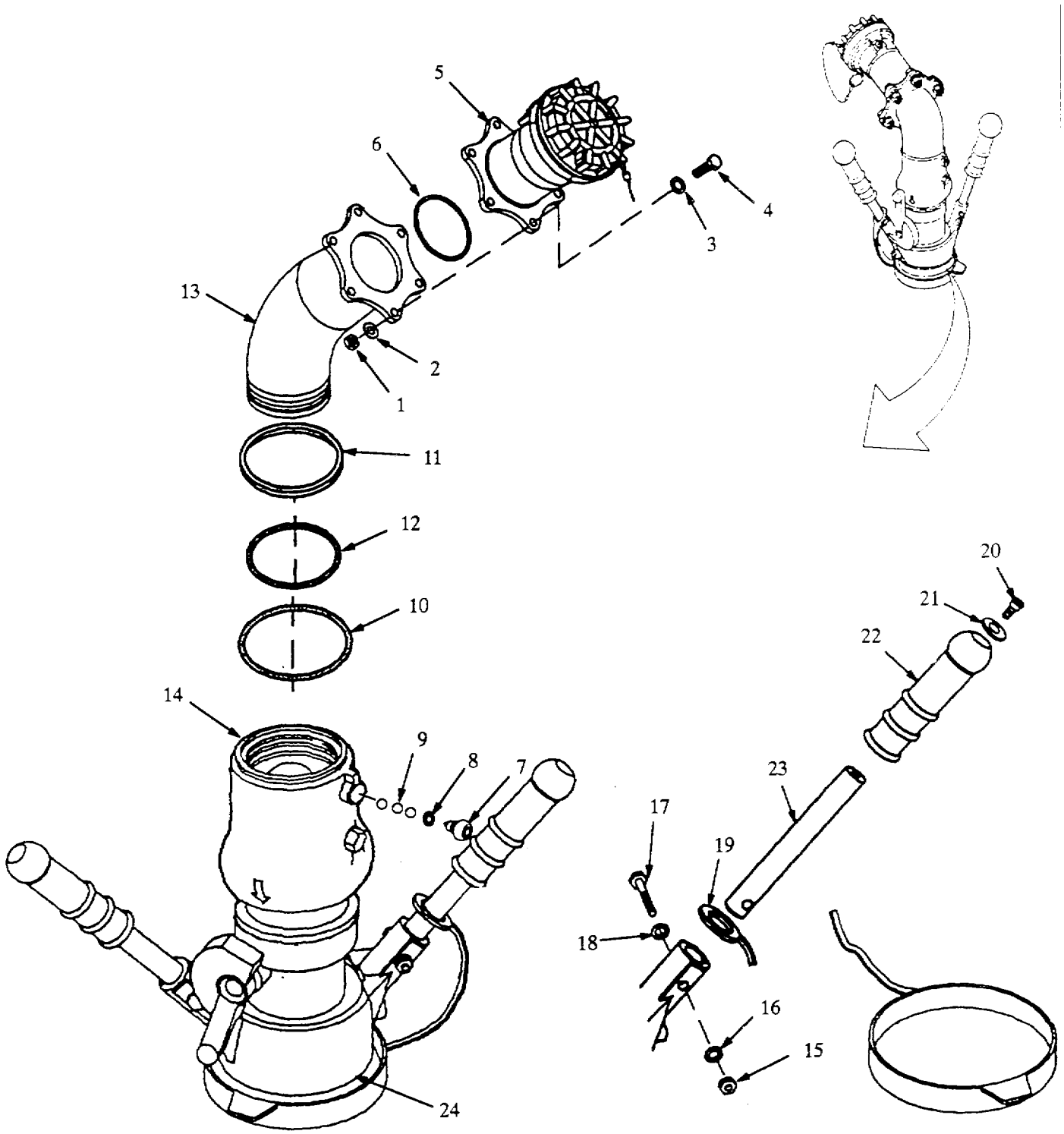

Figure 4-1A. Pressure Fuel Servicing Nozzle (D1) Repair.

4-13A. (MODEL HTARS101) SINGLE POINT REFUELING NOZZLE (DI) ASSEMBLY REPAIR - cont.

(9) Remove self locking nut (15), flat washer (16), screw (17), and flat washer (18) from collar (24).

(10) Remove handle (23) from collar (24).

(11) Slide cap (19) off of handle (23).

NOTE

Old grip must be cut from handle. Do not remove unless defective.

(12) Place handle (23) in vise.

(13) Remove self locking socket screw (20) and flat washer (21) from inside grip (22).

(14) Cut grip (22) from handle (23).

(15) Repeat steps (8) through (13), except step (11), for other handle.

b. Cleaning.

WARNING

Dry cleaning solvent, P-D-680, TYPE III, is potentially dangerous to personnel and property. Eye and skin protection is required. Avoid repeated and prolonged skin contact. Wash hands immediately after exposure. Do not use near open flame or excessive heat. Use only in areas with good ventilation.

Using wiping rags and cleaning solvent, remove dirt and contaminants from all components.

c. Inspection. Refer to figure 4-1A.

(1) Inspect inlet elbow (13) for cracks and corrosion. Check for scratches and abrasion at all sealing surfaces.

(2) Inspect regulator (14) for cracks, corrosion and damaged or missing parts.

(3) Inspect coupling adapter (5) for cracks, missing components and corrosion.

(4) Inspect collar (24) for cracks and corrosion.

d. Repair. Replace damaged or defective components. Replace all mandatory replacement parts. Repair non-valved dry break coupling on coupling adapter (para 4-14).

e. Assembly. Refer to figure 4-1A.

NOTE

Ensure that all parts identified as mandatory replacement parts are discarded and replaced with new components.

(1) Place handle (23) in vise.

4-13A. (MODEL HTARS101) SINGLE POINT REFUELING NOZZLE (D1) ASSEMBLY REPAIR - cont.

(2) Push grip (22) onto handle (23).

(3) Install flat washer (21) and self locking socket screw (20) in grip (22).

(4) Slide cap (19) onto handle (23).

(5) Remove handle (23) from vise and position in collar (24).

(6) Install flat washer (18), screw (17), flat washer (16) and self locking nut (15) in collar (24).

(7) Repeat steps (1) through (6), except step (4), for other handle.

(8) Apply a light coat of silicone compound to preformed packings (6, 8, 10 and 12) to aid installation.

(9) Install preformed packing (12) and slip ring (11) on inlet elbow (13).

CAUTION

To prevent premature failure of recirculation nozzle, make sure packing is installed in correct seat. Do not put packing in ball race.

(10) Install preformed packing (10) in seat of regulator (14).

(11) Push inlet elbow (13) into regulator (14).

(12) Position regulator (14) so that opening for balls (9) is pointing up.

(13) While pushing inlet elbow (13) into regulator (14), install 39 balls (9). Turn inlet elbow back and forth in body to aid installation.

(14) Install preformed packing (8) on screw (7).

(15) Install screw (7) in regulator (14).

(16) Position preformed packing (6) on inlet elbow (13).

(17) Position coupling adapter (5) on inlet elbow (13).

(18) Install six flat washers (4) screws (3), flat washers (2) and self locking nuts (1). Tighten nuts evenly in a cross pattern.

(19) Install D1 nozzle assembly in fuel system (para 2-12b).

(20) Start up fuel system (para 2-12g) and check D1 nozzle assembly for leaks.

4-14. NON-VALVED DRY BREAK COUPLING REPAIR.

This task consists of:	a. Disassembly	b. Cleaning	c. Inspection
	d. Repair	e. Assembly	

INITIAL SET-UP

Tools:
General Mechanics Tool Kit (App B, Sect III, Item 1)

Equipment Condition:
Component removed from fuel system (para 3-4a)

Material/Parts:
Silicone Compound (Item 3, App F)
Cleaning Solvent (Item 1, App F)
Wiping Rag (Item 2, App F)
Bumper (1) (Item 1, App J)
Repair Kit (Item 4, App J)

a. Disassembly. Refer to figure 4-2.

NOTE
Ensure that all parts identified as mandatory replacement parts are discarded and replaced with new components.

(1) Disconnect dust cap (2) from body (11).

(2) Remove seal (1) from dust cap (2).

(3) Disconnect wire ring (3) from end of retainer pin (4).

(4) Remove retainer pin (4) and spring (5) from body (11).

(5) Remove bumper (6) from body (11).

(6) Remove seal (7) from body (11).

(6A) (Model HTARS101 Single Point Refueling Nozzle) Remove retaining ring (7A) and screen (7B) from body (11).

(7) Remove screw (8) and attached preformed packing (9) from body (11).

NOTE
To prevent loss of balls and aid assembly, place a suitable container under body opening. Catch all balls as they fall from body.

(8) Position body (11) so that opening for balls (10) is pointing down.

(9) Rotate body (11) back and forth on fitting (11) until 41 balls (10) are removed.

(10) Remove body (11) and spring (12) from fitting (14).

(11) Remove preformed packing (13) from fitting (14).

4-14. NON-VALVED DRY BREAK COUPLING REPAIR - cont.

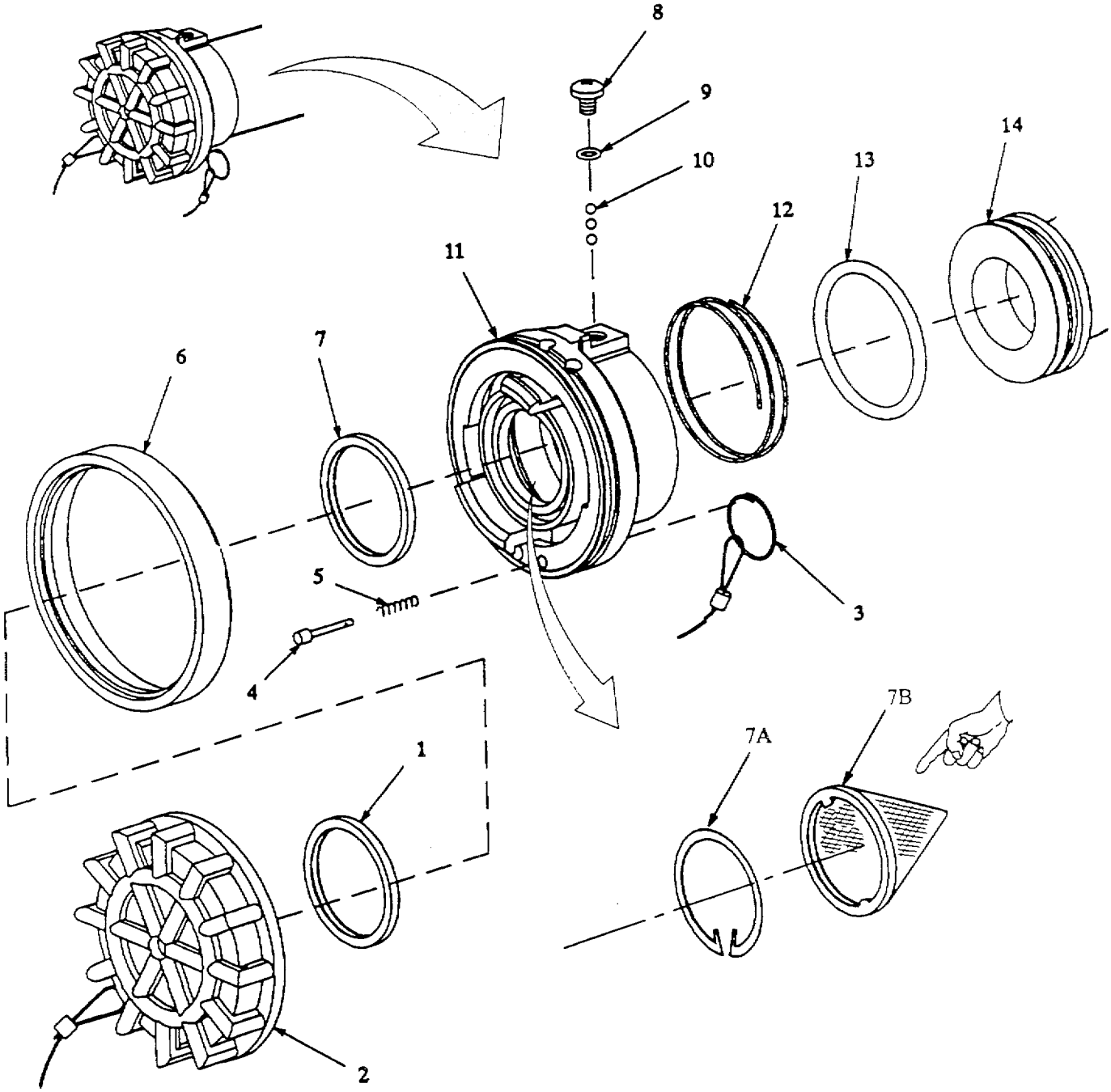

NOTE:
SCREEN (7B) AND RETAINING RING (7A) USED ON MODEL HTARS101 SINGLE POINT REFUELING NOZZLE (D1) ONLY.

Figure 4-2. Non-Valved Dry Break Coupling Disassembly.

4-14. NON-VALVED DRY BREAK COUPLING REPAIR - cont.

b. Cleaning.

WARNING

Dry cleaning solvent, P-D-680, Type III, is potentially dangerous to personnel and property. Eye and skin protection is required. Avoid repeated and prolonged skin contact. Wash hands immediately after exposure. Do not use near open flame or excessive heat. Use only in areas with good ventilation.

Using wiping rags and cleaning solvent, remove dirt and contaminants from all components.

c. Inspection. Refer to figure 4-3.

(1) Inspect body (11) for cracks, scratched or damaged sealing surfaces, damaged locking lugs and corrosion.

(2) Inspect dust cap (2) for cracks and damaged or missing locking lugs.

(3) Inspect retainer pin (4) for cracks, wear and scoring.

d. Repair. Replace damaged or defective components. Replace all seals.

e. Assembly. Refer to figure 4-3.

NOTE

Ensure that all parts identified as mandatory replacement parts are discarded and replaced with new components.

(1) Apply a light coat of silicone compound to seals (1 and 7) and preformed packings (9 and 13).

(2) Install preformed packing (13) on fitting (14).

(3) Install spring (12) and body (11) on fitting (14).

(4) Position body (11) so that opening for balls (10) is pointing up.

(5) While pressing body (11) onto fitting (14), install 41 balls (10) into body. Turn body back and forth to aid ball installation.

(6) Install preformed packing (9) on screw (8). Install screw in body (11).

(6A) (Model HTARS101 Single Point Refueling Nozzle) Install screen (7B) and retaining ring (7A) in body (11).

(7) Install seal (7) in seat on body (11).

(8) Install bumper (6) on body (11).

(9) Install retainer pin (4) and spring (5) on body (11).

(10) Connect wire ring (3) to end of retainer pin (4).

4-14. NON-VALVED DRY BREAK COUPLING REPAIR - cont.

(11) Install seal (1) in seat on dust cap (2).

(12) Connect dust cap (2) to body (11).

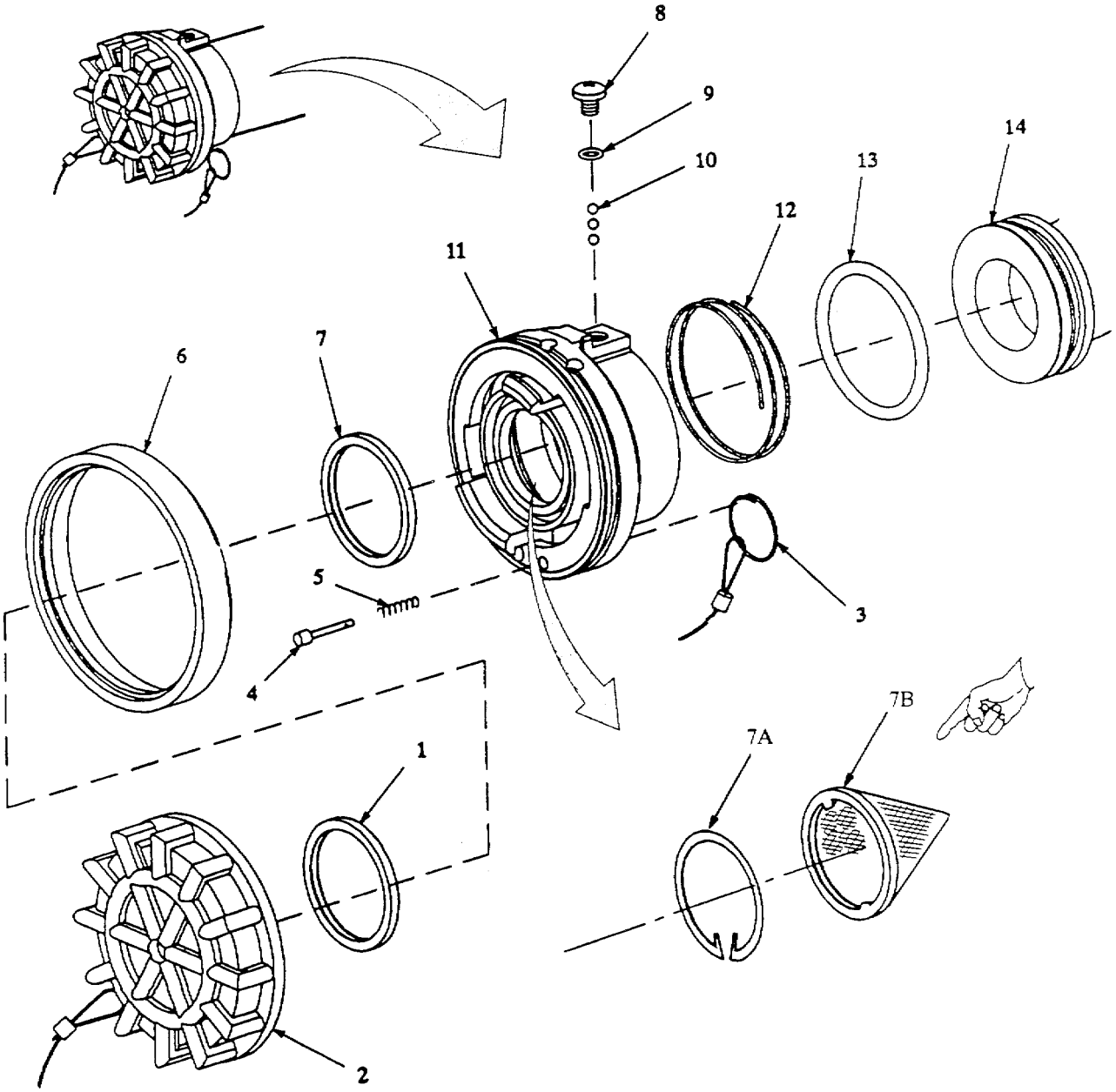

NOTE:
SCREEN (7B) AND RETAINING RING (7A) USED ON MODEL HTARS101 SINGLE POINT REFUELING NOZZLE (D1) ONLY.

Figure 4-3. Non-Valved Dry Break Coupling Assembly.

4-15. RECIRCULATION NOZZLE ASSEMBLY REPAIR.

This task consists of:	a. Disassembly	b. Cleaning	c. Inspection
	d. Repair	e. Assembly	

INITIAL SET-UP

Tools:
General Mechanics Tool Kit (App B, Sect III, Item 1)
Vise (App B, Sect III, Item 2)
Equipment Condition:
Recirculation nozzle removed from fuel system (para 3-4a)
Material/Parts:
Cleaning Solvent (Item 1, App F)
Wiping Rag (Item 2, App F)
Silicone Compound (Item 3, App F)
Anti-seize Tape (Item 5, App F)
Preformed Packing (Item 15, App J)
Slip Ring (Item 16, App J)
Preformed Packing (Item 15, App J)
Preformed Packing (Item 16, App J)
Preformed Packing (Item 17, App J)
Self Locking Nut (2) (Item 18, App J)
Self Locking Socket Screw (2) (Item 19, App J)

a. Disassembly. Refer to figure 4-4.

NOTES

- **Disassemble nozzle only to the extent required to replace defective items.**
- **Ensure that all parts identified as mandatory replacement parts are discarded and replaced with new components.**

(1) Separate dust cap (2) from inlet adapter (8).

(2) Remove preformed packing (1) from dust cap (2).

(3) Remove screw (3) and attached preformed packing (4) from body (25).

NOTE

To prevent loss of balls and aid assembly, place a suitable container under body opening. Catch all balls as they fall from body.

(4) Position body (25) so that opening for balls (5) is pointing down.

(5) Rotate inlet adapter (8) back and forth on body (25) until 39 balls (5) are removed.

(6) Separate inlet adapter (8) from body (25).

CAUTION

Slip ring must be cut to be removed. Use care not to damage sealing surfaces of inlet adapter.

(7) Cut slip ring (6) from inlet adapter (8) and remove preformed packing (7).

(8) Disconnect hose (10) from barb (11).

4-15. RECIRCULATION NOZZLE ASSEMBLY REPAIR - cont.

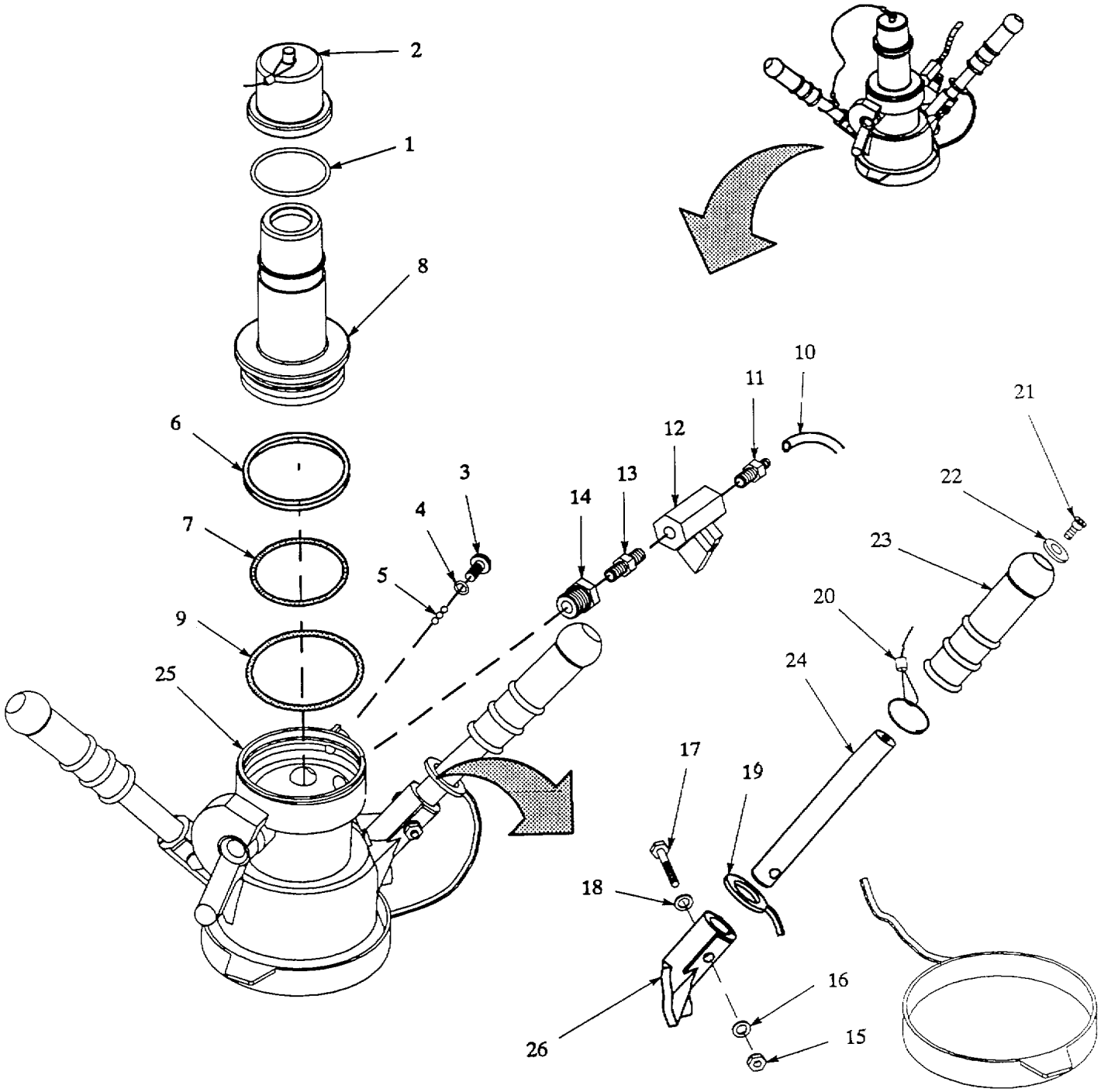

Figure 4-4. Recirculation Nozzle Disassembly.

4-15. RECIRCULATION NOZZLE ASSEMBLY REPAIR - cont.

(9) Remove reducer (14) and attached parts from body (25).

(10) Remove barb (11), ball valve (12) and union (13) from reducer (14)!.

(11) Remove self locking nut (15), flat washer (16), screw (17), and flat washer (18) from collar (26).

(12) Remove handle (24) from collar (26).

(13) Slide cap (19) and wire ring (20) off of handle (24).

NOTE
Old grip must be cut from handle. Do not remove unless defective.

(14) Place handle (24) in vise.

(15) Remove self locking socket screw (21) and flat washer (22) from inside grip 123).

(16) Cut grip (23) from handle (24).

(17) Repeat steps (11) through (16), except step (13), for other handle.

b. Cleaning.

WARNING
Dry cleaning solvent, P-D-680, Type III, is potentially dangerous to personnel and property. Eye and skin protection is required. Avoid repeated and prolonged skin contact. Wash hands immediately after exposure. Do not use near open flame or excessive heat. Use only in areas with good ventilation.

Using wiping rags and cleaning solvent, remove dirt and contaminants from all components.

c. Inspection. Refer to figure 4-5.

(1) Inspect inlet adapter (8) for cracks. Check for scratches and abrasion at all sealing surfaces. Push in on check valve mounted inside dust cap end of adapter. Valve should move off seat without sticking and seat against adapter end when released.

(2) Inspect body (25) for cracks, corrosion and damaged or missing parts.

(3) Inspect ball valve (12) for damaged or missing control handle. Valve should operate smoothly without sticking or jamming.

(4) Inspect collar (26) for cracks and corrosion.

d. Repair. Replace damaged or defective components. Replace all mandatory replacement parts.

4-15. RECIRCULATION NOZZLE ASSEMBLY REPAIR - cont.

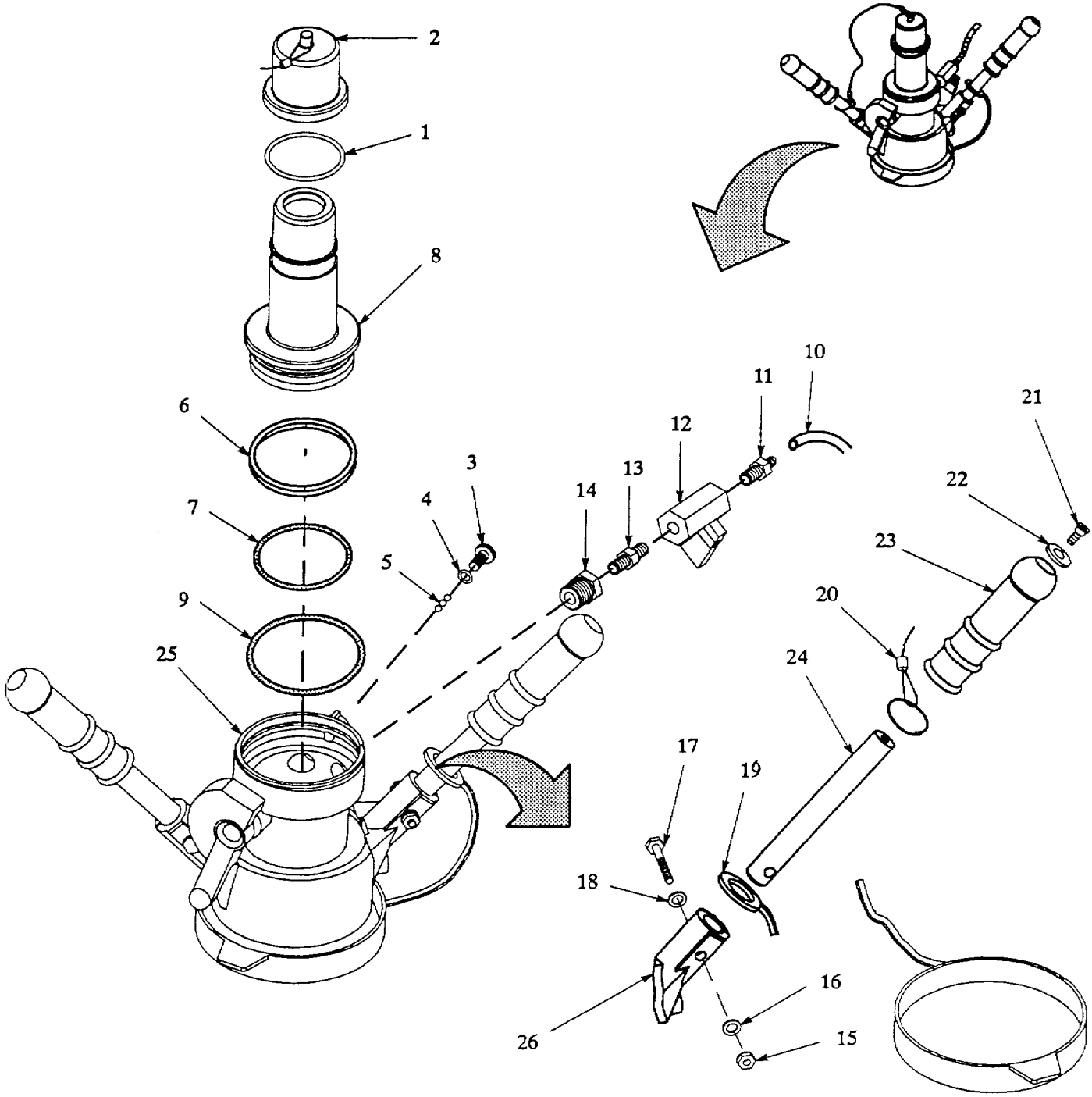

Figure 4-5. Recirculation Nozzle Assembly.

4-15. RECIRCULATION NOZZLE ASSEMBLY REPAIR- cont.

e. Assembly. Refer to figure 4-5.

(1) Push grip (23) onto handle (24).

(2) Install flat washer (22) and self locking socket screw (21) in grip (23).

(3) Remove handle (24) from vise.

(4) Slide cap (19) and wire ring (20) onto handle (24).

(5) Position handle (24) in collar (26) and install flat washer (18), screw (17), flat washer (16) and self locking nut (15).

(6) Repeat steps (1), (2), (4) and (5) for other handle.

CAUTION

To prevent damage to body, do not apply more than two wraps of anti-seize tape to male threads of reducer. Excessive tape may cause body to crack when reducer is installed.

(7) Apply anti-seize tape to male threads of reducer (14), coupling 1:13) and barb (11).

(8) Install coupling (13), ball valve (12) and barb (11) on reducer (14).

(9) Install reducer (14) and attached parts on body (25).

(10) Connect hose (10) to barb (11).

(11) Apply a light coat of silicone compound to preformed packings (1, 4, 7. and 9).

CAUTION

To prevent premature failure of recirculation nozzle, make sure packing is installed in correct seat, Do not put packing in ball race.

(12) Install preformed packing in seat of body (25).

(13) Install preformed packing (7) in seat of inlet adapter (8).

(14) Install slip ring (6) over preformed packing (7).

(15) Position body (25) so that opening for balls (5) is pointing up.

(16) While pushing inlet adapter (8) into body (25). install 39 balls (5). Turn inlet adapter back and forth on body to aid installation.

(17) Install preformed packing (4) on screw 13). Install screw in body (25).

4-15. RECIRCULATION NOZZLE ASSEMBLY REPAIR -cont.

(18) Install preformed packing (1) in dust cap (2).

(19) Install dust cap (2) over end of inlet adapter (8).

(20) Connect recirculation nozzle assembly to CCR nozzle in fuel system (para 2-12d).

(21) Start up fuel system (para 2-12g) and check recirculation nozzle assembly for leaks.

4-17. 2-INCH FUEL HOSE ASSEMBLY HOSE REPAIR.

This task consists of:	a. Disassembly	b. Cleaning	c. Inspection
	d. Repair	e. Assembly	

INITIAL SET-UP

Tools:
General Mechanics Tool Kit (App B, Sec III, Item 1)
Vise (App B, Sec III, Item 2)
Clamping Tool (App B, Sec III, Item 8)

Equipment Condition:
Hose removed from system (para 3-4a)

Material/Parts:
Wiping Rag (Item 2, App F)
Clamp (4) (Item 10, App J)

NOTES

- **Ensure that all parts identified as mandatory replacement parts are discarded and replaced with new components. Disassemble hoses only to the level required to make repairs.**
- **The following procedure applies to all sizes of fuel hoses used in the fuel system.**

a. Disassembly. Refer to figure 4-7.

(1) Slide back rubber sleeve (1) from top of clamps (2 and 3).

(2) Cut clamps (2 and 3) from hose (9).

(3) Remove valved dry break coupling assembly (4) from end of hose (9).

(4) Slide back rubber sleeve (5) from top of clamps (6 and 7).

(5) Cut clamps (6 and 7) from hose (9).

(6) Remove valved dry break coupling assembly (8) from end of hose (9).

b. Cleaning.

WARNING

Dry cleaning solvent, P-D-680, Type III, is potentially dangerous to personnel and property. Eye and skin protection is required. Avoid repeated and prolonged skin contact. Wash hands immediately after exposure. Do not use near open flame or excessive heat. Use only in areas with good ventilation.

Using wiping rags and cleaning solvent, remove dirt and contaminants from all components.

4-17. 2-INCH FUEL HOSE ASSEMBLY HOSE REPAIR -cont.

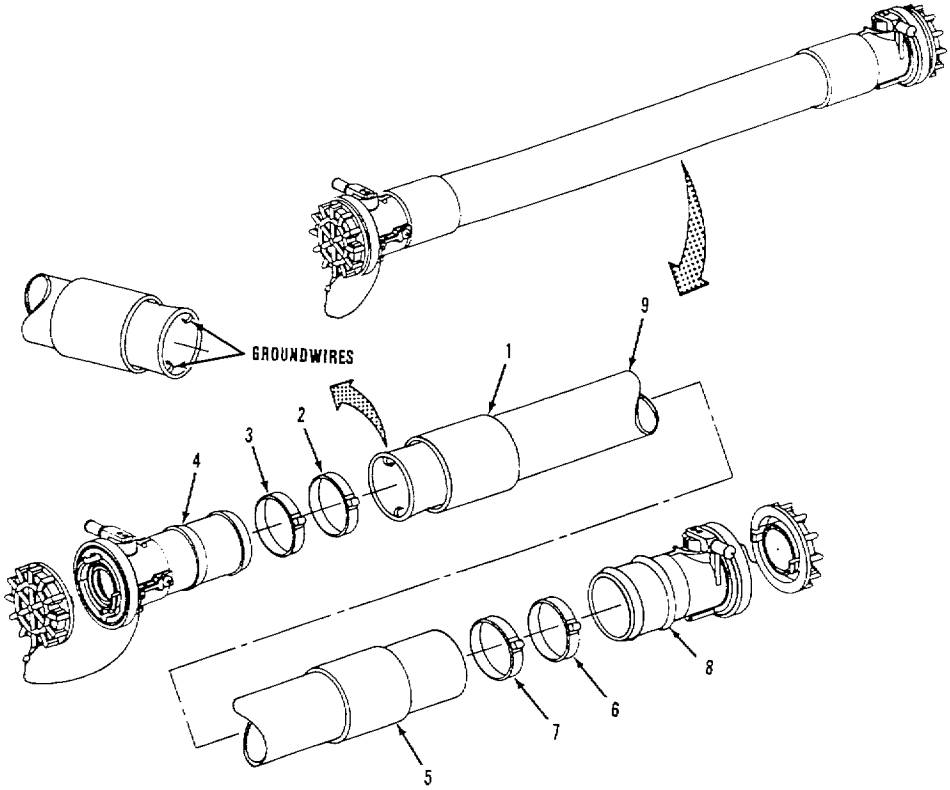

Figure 4-7. 2-Inch Fuel Hose Repair.

c. Inspection. Refer to figure 4-7.

(1) Inspect valved dry break coupling assemblies (4 and 8) for cracks, corrosion and damaged coupling ends.

(2) Inspect hose (9) for cuts, tears, punctures, bulges and delamination.

(3) Inspect ends of hose (9) for damaged or missing ground wires. Perform continuity test of ground wires from one end of hose to the other. Continuity must exist.

(4) Inspect ground wires at both ends of hose (9). At least 1/2 inch of wire must be exposed. If required, trim back hose material to obtain correct wire length.

d. Repair.

(1) Replace damaged components and all mandatory replacement parts.

(2) Repair valved dry break coupling assemblies (para 4-18).

e. Assembly. Refer to figure 4-7.

(1) Slide sleeve (5) onto hose (9) and position it about 12 inches back from end of hose.

(2) Fold ends of grounding wires into hose (9).

4-17. 2-INCH FUEL HOSE ASSEMBLY HOSE REPAIR -cont.

(3) Push valved dry break coupling assembly (8) into end of hose (9).

(4) Slide sleeve (1) onto hose (9) and position it about 12 inches back from end of hose.

(5) Push valved dry break assembly (4) into end of hose (9).

(6) Perform continuity test between valved dry break couplings (4 and 8) to ensure ground wires are firmly seated against couplings. Continuity must exist.

(7) Wrap end of clamp (1, figure 4-8) around hose (3) and through seal (2). Position clamp about 1-inch from end of hose.

(8) Wrap another loop of clamp (1) around hose (3) and through seal (2).

(9) Position tag end of clamp (1) in slots of clamping tool (4). Tool nose (5) should fit snug against seal (2).

(10) Apply pressure to gripper lever (6) and turn handle (7) until clamp (1) is snug. Tool will lock in place when correct tension is applied. Reposition tool as required.

CAUTION
Strapping can damage hose if over tightened.

(11) Turn handle (7) to the right (clockwise) to tighten strapping (1). Continue turning handle until strapping stops moving through seal (2).

CAUTION

Strapping may break if operator does not release tension on handle when bending over seal.

(12) While reversing handle (7) 3/4 turn, roll tool (4) to opposite side of seal (2). (This will bend strapping and prevent it from slipping through seal when tool is removed.)

(13) Pull cutting handle (8) on tool to cut strapping (1).

(14) Remove tool (4) while holding strapping stub down on seal (2) with thumb.

(15) Clinch end of clamp (1) by hammering down tag end clamp over seal (2).

(16) Repeat steps (7) through (15) for three remaining clamps (2,3, and 7, figure 4-9). Clamps should be 1-inch from end of hose and 2-inches apart.

(17) Slide sleeve (5) over clamps (6 and 7).

(18) Slide sleeve (1) over clamps (2 and 3).

(19) Install hose assembly in fuel system (para 3-4b).

(20) Start up fuel system (para 2-12g) and test repaired hose for leaks.

4-17. 2-INCH FUEL HOSE ASSEMBLY HOSE REPAIR -cont.

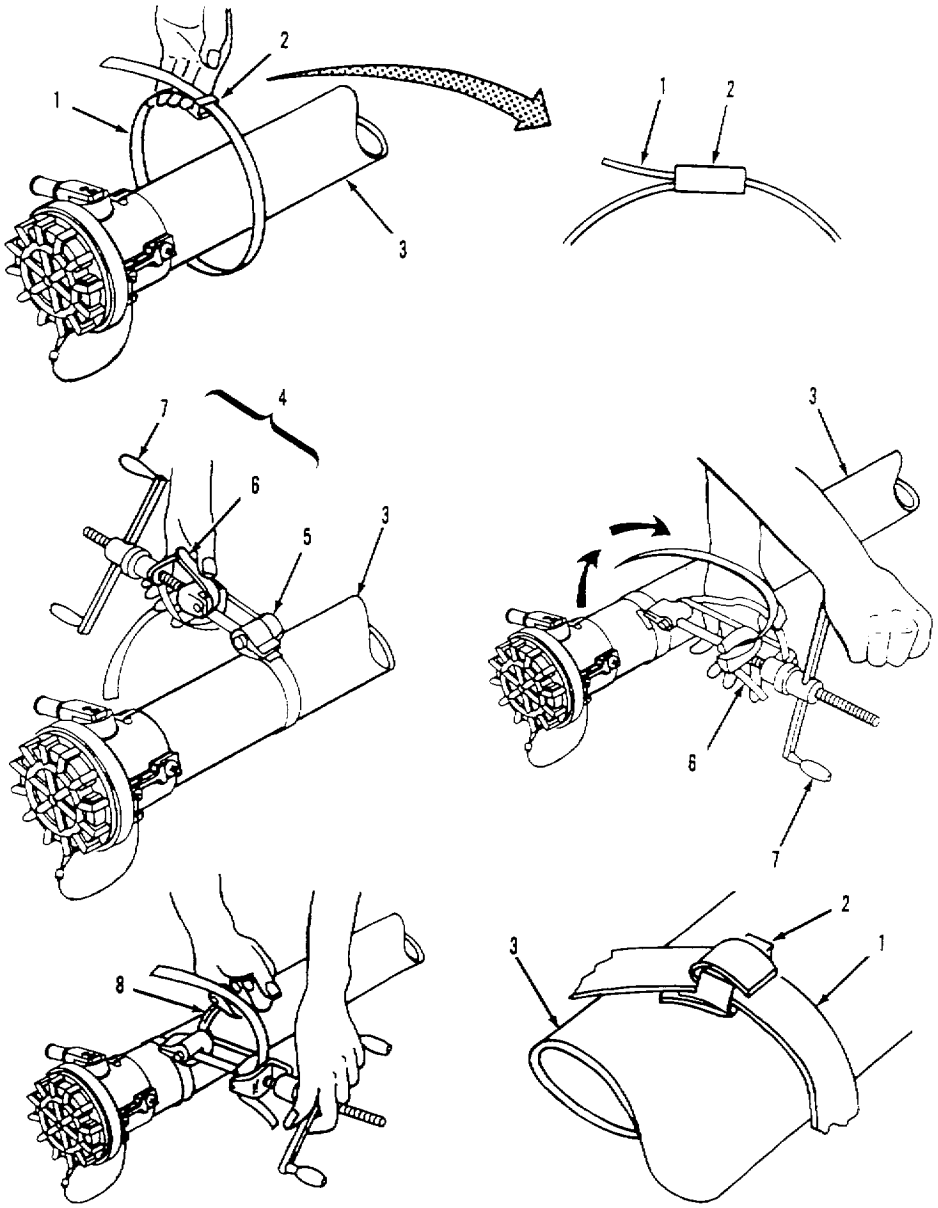

Figure 4-8. 2-inch Fuel Hose Clamp Installation.

4-18. VALVED DRY BREAK COUPLING REPAIR.

This task consists of:	a. Removal	b. Disassembly	c. Cleaning	d. Inspection
	e. Repair	f. Assembly	g. Installation	h. Adjustment

INITIAL SET-UP

Tools:
General Mechanics Tool Kit (App B, Sect III, (Item 1)
Equipment Condition:
Component removed from fuel system (para 3-4a)
Material/Parts:
Silicone Compound (Item 3, App F)
Cleaning Solvent (Item 1, App F)
Wiping Rag (Item 2, App F)
Bumper (1) (Item 1, App J)
Repair Kit (Item 5, App J)
Self-locking Setscrew (Item 6, App J)
Preformed Packing (2) (Item 7, App J)
Ball Seal (Item 8, App J)
Preformed Packing (Item 9, App J)

a. Removal. Refer to figure 4-9.

NOTE
Ensure that all parts identified as mandatory replacement parts are discarded and replaced with new components.

(1) Set control handle (1) to CLOSE position.

(2) Remove screw (2) and attached preformed packing (3) from coupling (10).

NOTE
To prevent loss of balls and aid assembly, place a suitable container under body opening. Catch all balls as they fall from body.

(3) Position coupling (10) so that opening for balls (4) is pointing down.

(4) Rotate coupling (10) back and forth on fitting (9) until 41 balls (4) are removed.

(5) Separate coupling (10) from fitting (9).

(6) Remove preformed packing (5) from fitting (9).

(7) Remove ball seal (6), preformed packing (7) and eight springs (8) from fitting (9).

4-18. VALVED DRY BREAK COUPLING REPAIR -cont.

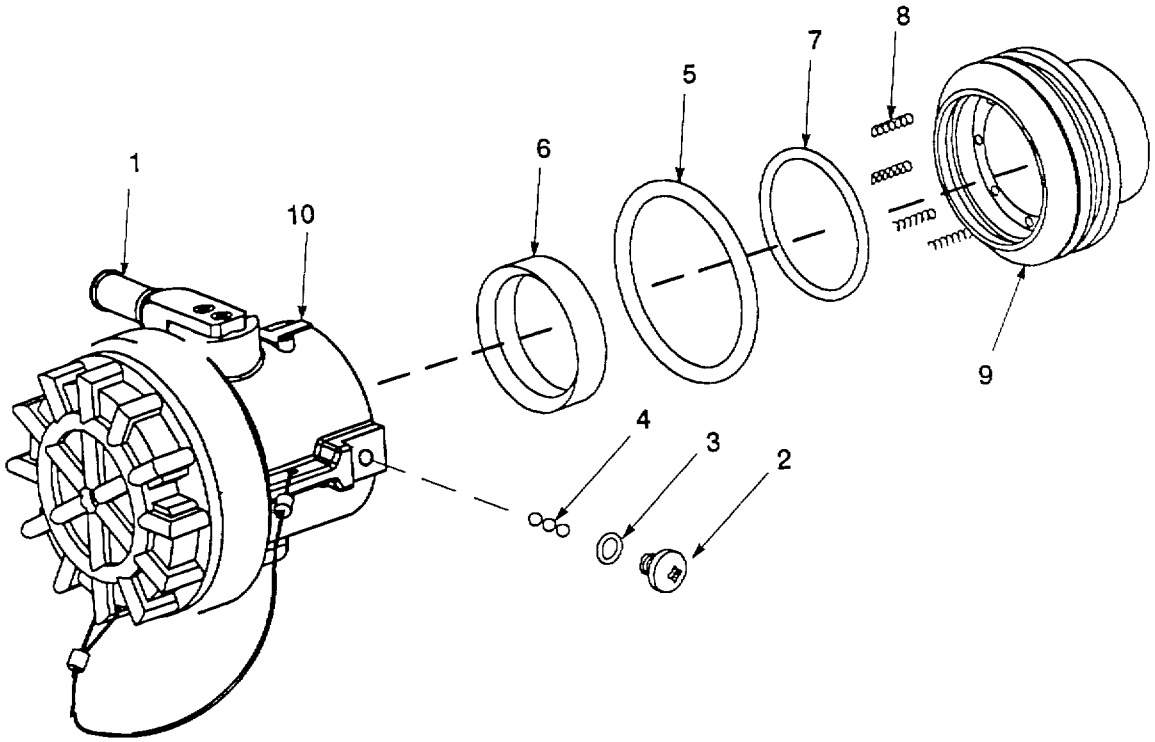

Figure 4-9. Valved Dry Break Coupling Removal.

b. Disassembly. Refer to figure 4-10.

NOTE

Ensure that all parts identified as mandatory replacement parts are discarded and replaced with new components.

(1) Disconnect dust cap (2) from body (21).

(2) Remove seal (1) from dust cap (2).

(3) Remove bumper 13) and seal (4) from body (21).

(4) Remove two self-locking screws (5) from arm (9). Remove arm and attached parts from body (21).

(5) Remove screw (6), grip (8) and spring (7) from arm (9).

4-18. VALVED DRY BREAK COUPLING REPAIR -cont.

(6) Remove ball (10) from back of body (21).

(7) Remove stem (11) and attached preformed packing (12) from body (21).

(8) Remove spring washer (13), stop pin (14) and preformed packing (15) from body (21).

(9) Remove self-locking setscrew (16), lock out pin (17) and spring (18) from body (21).

(10) Remove seal (19) and preformed packing (20) from body (21).

c. Cleaning.

WARNING

Dry cleaning solvent, P-D-680, Type III, is potentially dangerous to personnel and property. Eye and skin protection is required. Avoid repeated and prolonged skin contact. Wash hands immediately after exposure. Do not use near open flame or excessive heat. Use only in areas with good ventilation.

Using wiping rags and cleaning solvent, remove dirt and contaminants from all components.

d. Inspection. Refer to figure 4-10.

(1) Inspect body (21) for cracks, scratched or damaged sealing surfaces, damaged locking lugs and corrosion.

(2) Inspect dust cap (2) for cracks and damaged or missing locking lugs.

(3) Inspect stop pin (14) for cracks, wear and scoring.

(4) Inspect ball (10) for corrosion, flat spots and wear.

(5) Inspect lock out pin (17) for wear.

e. Repair. Replace damaged and mandatory replacement components.

f. Assembly. Refer to figure 4-11.

NOTE

Ensure that all parts identified as mandatory replacement parts are discarded and replaced with new components.

(1) Lightly coat preformed packings (12, 15 and 20) and seals (1 and 4) with silicone compound.

(2) Install preformed packing (20) and seal (19) in body (21). Make sure seal is fully seated in body. Seal will snap in place on top of preformed packing when correctly installed.

(3) Install setscrew (16), lock out pin (17) and spring (18) on body (21). Tighten screw until bottomed out, then back off 1-1/2 turns.

4-18. VALVED DRY BREAK COUPLING REPAIR -cont.

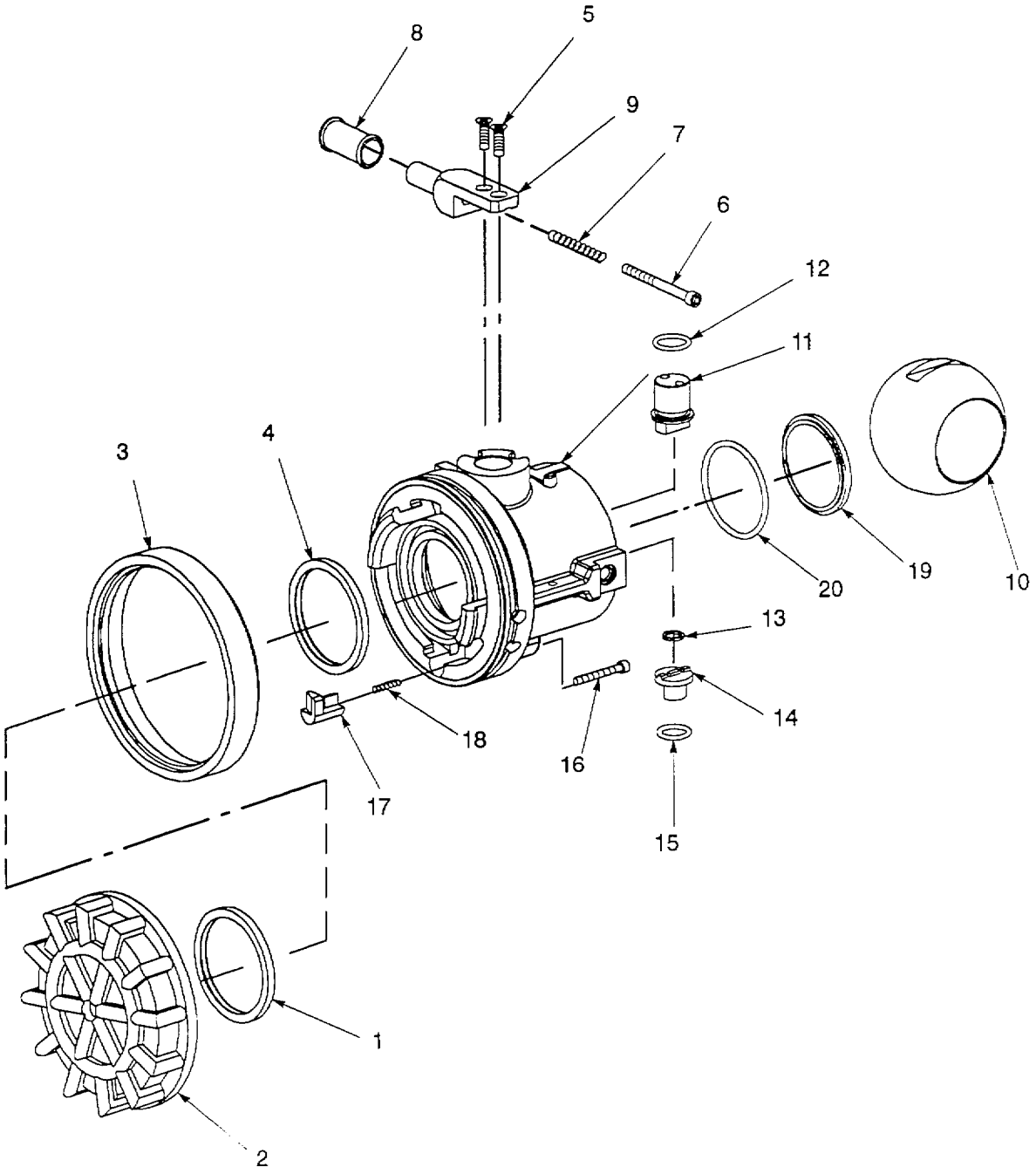

Figure 4-10. Valved Dry Break Coupling Disassembly.

4-18. VALVED DRY BREAK COUPLING REPAIR -cont.

(4) Install preformed packing (12) on stem (11).

(5) Install stem (11) in opening in top of body (21). Position stem so that guide on stem lines up with body as shown.

(6) Install preformed packing (15) on stop pin (14).

NOTE

Stop pin will sit flush in body and guide on pin will line up with body as shown, when pin is correctly installed.

(7) Install stop pin (14) and attached preformed packing (15) in opening in bottom of body (21). Make sure flat surface of stop pin and flat surface of lock out pin (17) are positioned as shown.

(8) Position spring washer (13) in center of stop pin (14).

NOTE

Flat part of ball faces stop pin.

(9) Carefully install ball (10) in body (21) so that grooves at top and bottom of ball aline with guides on stem (11) and stop pin (14). Make sure spring washer (13) stays in place.

(10) Install grip (8), spring (7) and screw (6) on arm (9).

(11) Place arm (9) and attached parts in the CLOSED position on body (21).

CAUTION

To prevent reverse operation of ball, make sure arm is installed on stem in the CLOSED position.

(12) Secure arm (9) to stem (11) with two self-locking screws (5).

(13) Install seal (4) in seat on body (21).

(14) Install bumper (3) on body (21).

(15) Install seal (1) in seat on dust cap (2).

(16) Connect dust cap (2) to body (21).

4-18. VALVED DRY BREAK COUPLING REPAIR -cont.

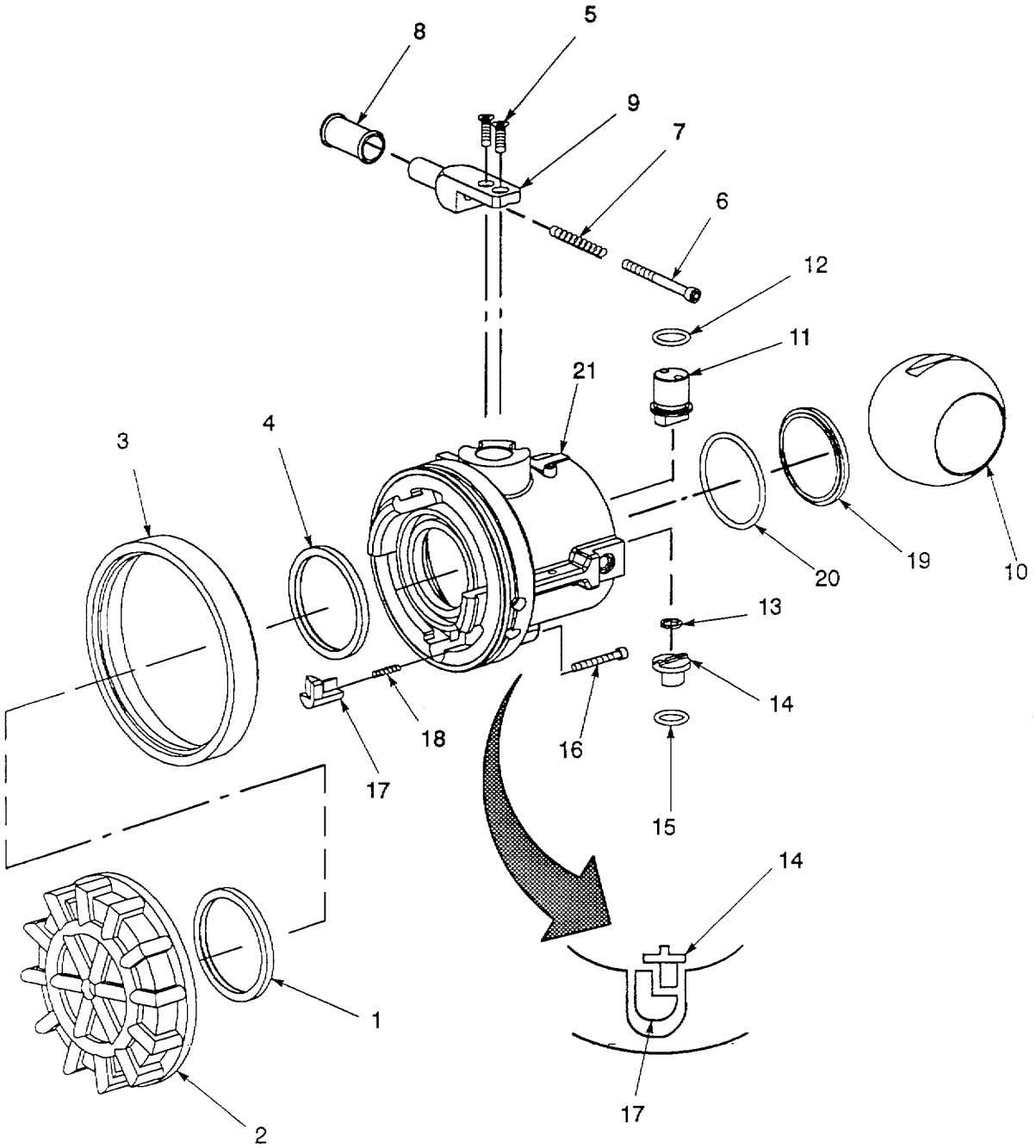

Figure 4-11. Valved Dry Break Coupling Assembly.

4-18. VALVED DRY BREAK COUPLING REPAIR -cont.

g. Installation. Refer to figure 4-12.

(1) Lightly coat preformed packings (3, 5 and 7) with silicone compound.

(2) Install eight springs (8),preformed packing (7) and ball seal (6) in fitting (9).

(3) Install preformed packing (5) on fitting (9).

(4) Push coupling (10) onto fitting (9).

(5) Position coupling (10) so that opening for balls (4) is pointing up.

(6) While pressing coupling (10) onto fitting (9), install 41 balls (4). Rotate coupling back and forth on fitting to aid installation.

(7) Install preformed packing (3) on screw (2).

(8) Install screw on coupling (10).

h. Adjustment. Refer to figure 4-13.

CAUTION

Misadjustment of the valved coupling may prevent movement of control handle and prevent disconnection of coupling from mating component.

NOTE

Turning setscrew too far in will cause control handle to stick or jam in one position. Turning setscrew too far out will prevent disconnection of coupling.

(1) Check control handle operation. Set control handle (1) on coupling (2) from OPEN position to CLOSE. If handle cannot be moved from one position to the other, or handle sticks between either position, adjust coupling as follows:

(a) Turn setscrew (3) to the left (counterclockwise) 1/4 turn.

(b) Move control handle (1) from OPEN to CLOSE position.

(c) Repeat steps (a) and (b) as required until control handle (1) moves freely without sticking.

(2) Check lock out pin operation. Remove dust cap (4) from coupling (2). If dust cap can be removed, coupling is adjusted correctly. If dust cap cannot be removed, adjust setscrew as follows:

(a) Turn setscrew (3) to the right (clockwise) 1/4 turn.

(b) Attempt to remove dust cap (4) from coupling.

(c) Repeat steps (a) and (b) as required until dust cap can be removed easily.

4-18. VALVED DRY BREAK COUPLING REPAIR -cont.

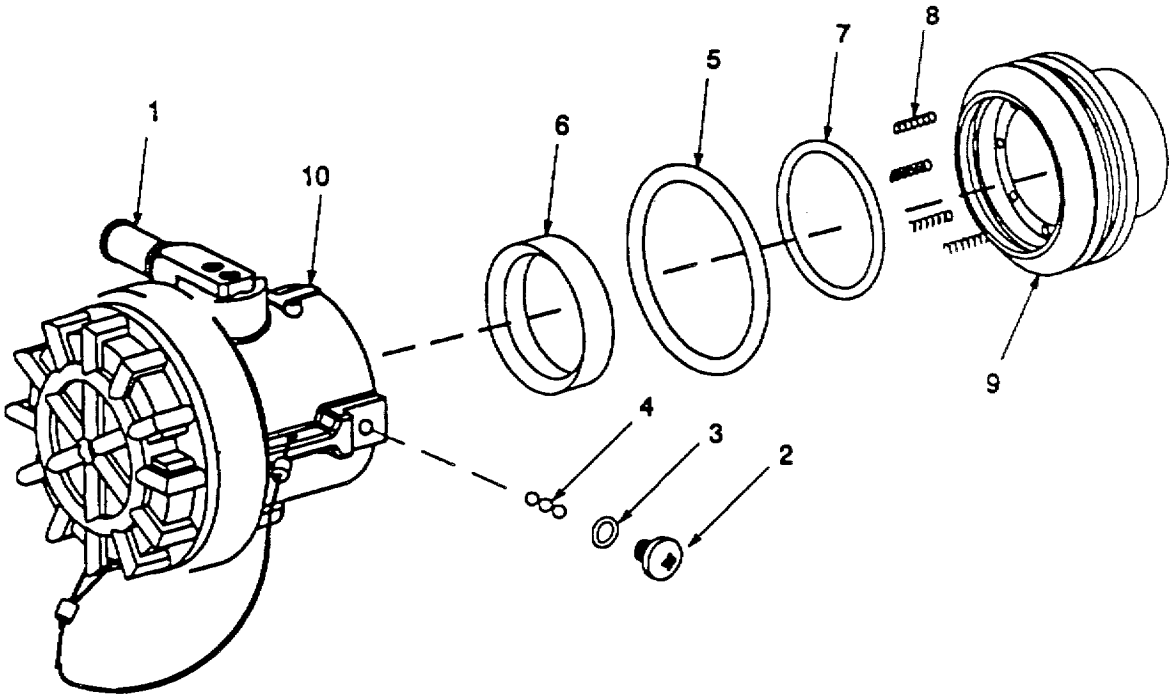

Figure 4-12. Valved Dry Break Coupling Installation.

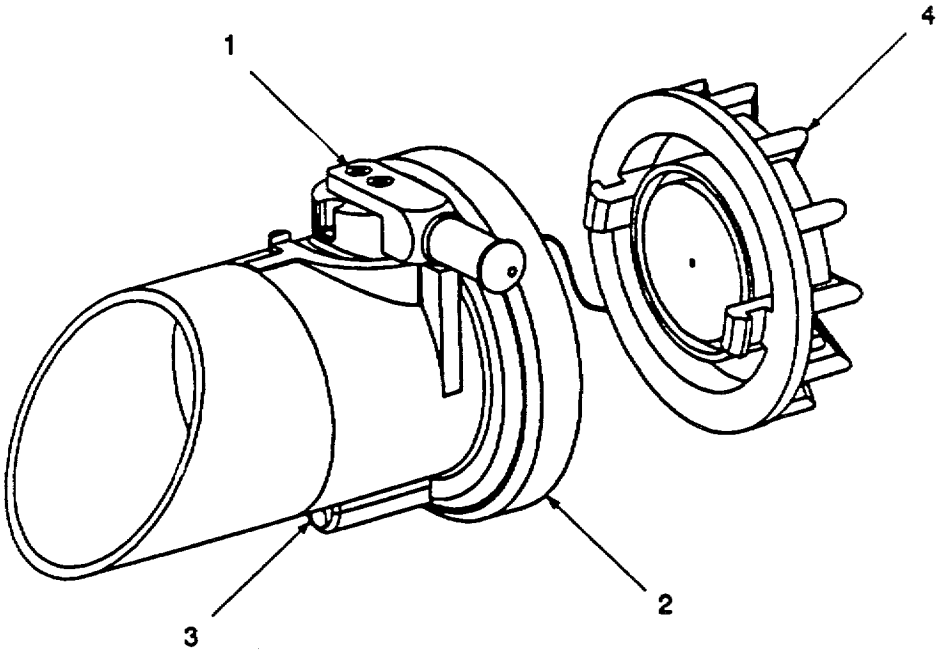

Figure 4-13. Valved Dry Break Coupling Adjustment,

4-19. ELBOW ASSEMBLY REPAIR

This task consists of: a. Disassembly b. Cleaning c. Inspection d. Repair e. Assembly

INITIAL SET-UP:

Tools:
General Mechanics Tool Kit (App B, Sect III, Item 1)

Equipment Condition:
Component removed from fuel system (para 3-4a)

Material/Parts:
Cleaning Solvent (Item 1, App F)
Wiping Rag (Item 2, App F)

a. Disassembly. Refer to figure 4-14.

(1) (Model HTARS100) Remove non-valved dry break couplings (1 and 2) from elbow body (3) (para 4-14).

(2) (Model HTARS101) Remove valved dry break couplings (1 and 2) from elbow body (3) (para

b. Cleaning.

WARNING

Dry cleaning solvent, P-D-680, Type III, is potentially dangerous to personnel and property. Eye and skin protection is required. Avoid repeated and prolonged skin contact. Wash hands immediately after exposure. Do not use near open flame or excessive heat. Flash point is 138F. Use only in areas with good ventilation.

Using wiping rags and cleaning solvent, remove dirt and contaminants from all components.

c. Inspection. Refer to figure 4-14.

(1) Inspect non-valved dry break coupling assemblies (1 and 2) for cracks, corrosion and damaged coupling bodies. Check sealing surfaces for scratches.

(2) Inspect elbow body (3) for cracks, splits, pitting, and corrosion.

d. Repair. Refer to figure 4-14.

(1) Replace damaged or defective elbow body (3).

(2) Repair non-valved dry break coupling assemblies (1 and 2) in accordance with para 4-14.

4-19. ELBOW ASSEMBLY REPAIR -cont.

e. Assembly. Refer to figure 4-14.

(1) (Model HTARS100) Install non-valved dry break coupling (1 and 2) on elbow body (3) (para 4-14).

(2) (Model HTARS101) Install valved dry break couplings (1 and 2) on elbow body (3) (para 4-18).

(3) Install elbow assembly in fuel system (para 3-4b).

(4) Start up fuel system (para 2-12g) and check elbow assembly for leaks.

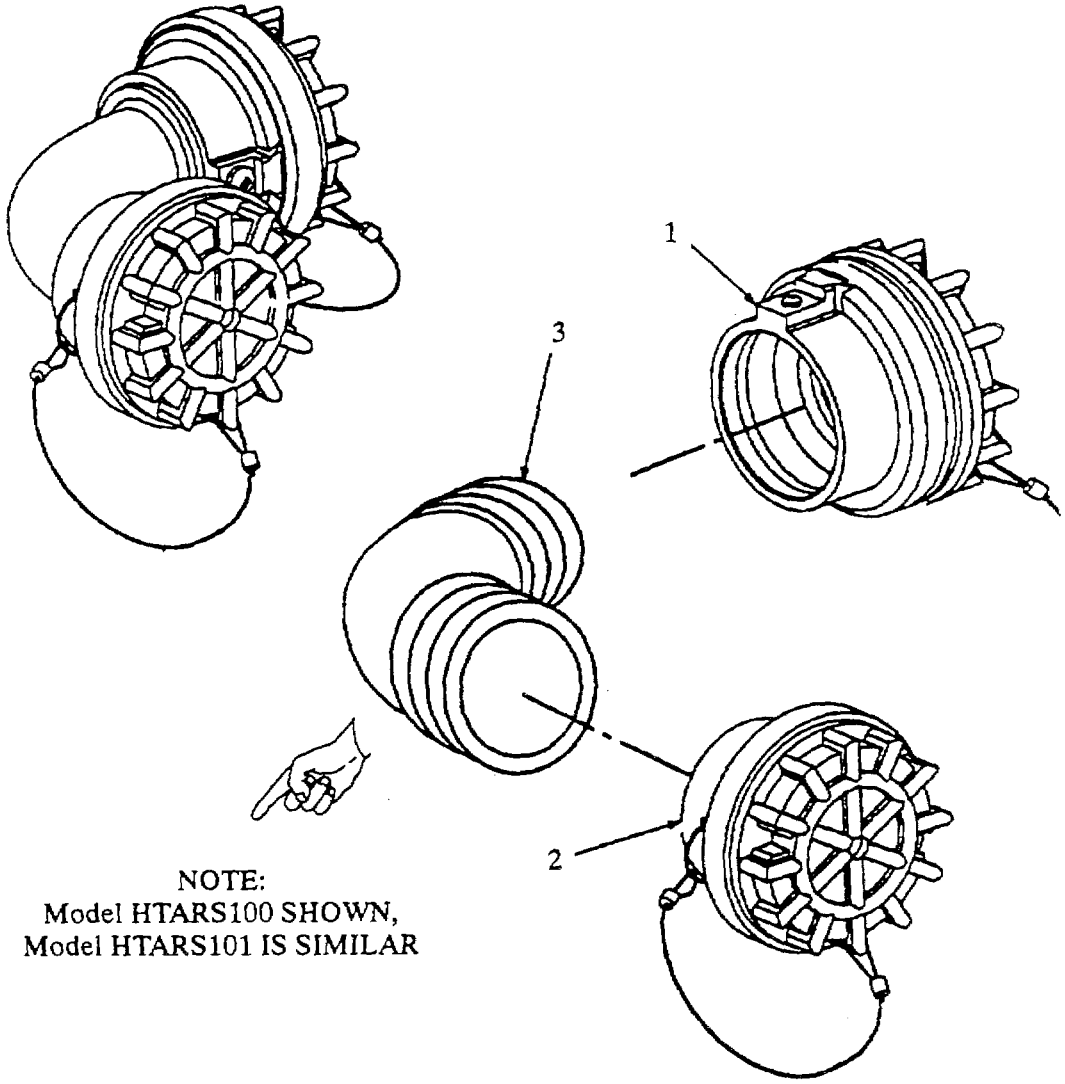

Figure 4-14. Elbow Assembly Repair.

4-20. TEE ASSEMBLY REPAIR.

This task consists of: a. Disassembly b. Cleaning c. Inspection d. Repair e. Assembly

INITIAL SET-UP:

Tools:
General Mechanics Tool Kit (App B, Sect III, Item 1)

Equipment Condition:
Component removed from fuel system (para 3-4a)

Material/Parts:
Cleaning Solvent (Item 1, App F)
Wiping Rag (Item 2, App F)

a. Disassembly. Refer to figure 4-20.

(1) Remove valved dry break coupling (1) from tee body (4) (para 4-14).

(2) Remove valved dry break coupling (2) from tee body (4) (para 4-14).

(3) Remove valved dry break coupling (3) from tee body (4) (para 4-14).

b. Cleaning.

WARNING

Dry cleaning solvent, P-D-680, Type III, is potentially dangerous to personnel and property. Eye and skin protection is required. Avoid repeated and prolonged skin contact. Wash hands immediately after exposure. Do not use near open flame or excessive heat. Use only in areas with good ventilation.

Using wiping rags and cleaning solvent, remove dirt and contaminants from all components.

c. Inspection. Refer to figure 4-20.

(1) Inspect valved dry break coupling assemblies (1, 2 and 3) for cracks, corrosion and damaged coupling bodies. Check sealing surfaces for scratches.

(2) Inspect tee body (4) for cracks, splits, pitting, and corrosion.

d. Repair. Refer to figure 4-20.

(1) Replace damaged or defective tee body (4).

(2) Repair valved dry break coupling assemblies (1 and 2) in accordance with para 4-18.

4-20. TEE ASSEMBLY REPAIR -cont.

e. Assembly. Refer to figure 4-20.

(1) Install valved dry break coupling (1) on tee body (4) (para 4-14).

(2) Install valved dry break coupling (2) on tee body (4) (para 4-14).

(3) Install valved dry break coupling (3) on tee body (4) (para 4-14).

(4) Install tee assembly in fuel system (para 3-4b).

(4) Start up fuel system (para 2-12g) and check tee assembly for leaks.

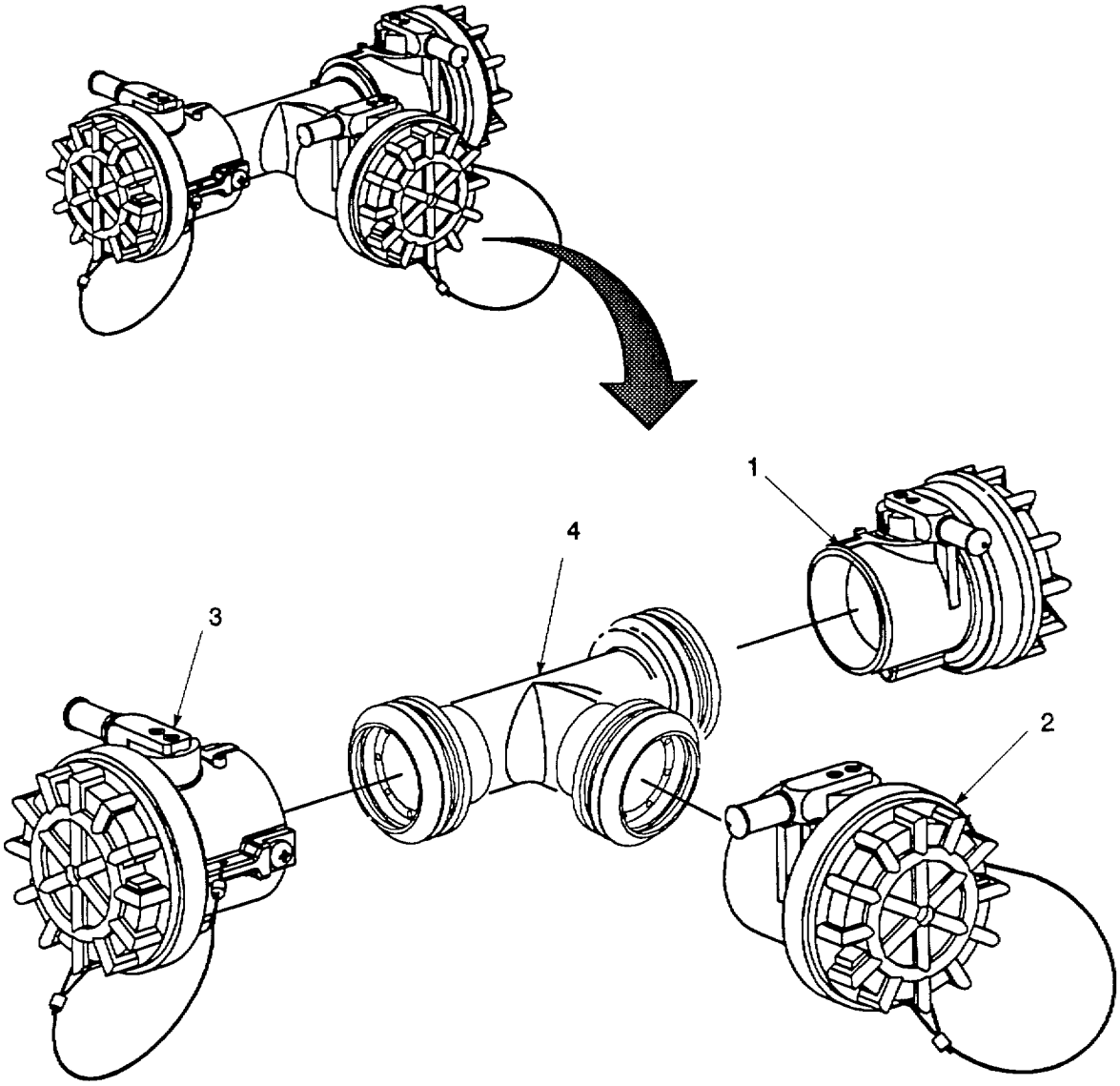

Figure 4-20. Tee Assembly Repair.

4-21. 3-INCH FUEL HOSE ASSEMBLY HOSE REPAIR.

This task consists of: a. Disassembly b. Cleaning c. Inspection d. Repair e. Assembly

INITIAL SET-UP:

Tools:
General Mechanics Tool Kit (App B, Sec III, Item 1)
Vise (App B, Sec III, Item 2)
Clamping Tool (App B, Sec III, Item 8)

Equipment Condition:
Hose removed from system (para 3-4a)

Material/Parts:
Wiping Rag (Item 2, App F)
Clamp (4) (Item 12, App J)

NOTES

- **Ensure that all parts identified as mandatory replacement parts are discarded and replaced with new components. Disassemble hoses only to the level required to make repairs.**
- **The following procedure applies to all sizes of fuel hoses used in the fuel system.**

a. Disassembly. Refer to figure 4-16.

(1) Slide rubber sleeve (1) from top of clamps (2 and 3).

(2) Cut clamps (2 and 3) from hose (9).

(3) Remove ball valve assembly (4) from end of hose (9).

(4) Slide rubber sleeve (5) from top of clamps (6 and 7).

(5) Cut clamps (6 and 7) from hose (9).

(6) Remove valved dry break coupling assembly (8) from end of hose (9).

b. Cleaning.

WARNING

Dry cleaning solvent, P-D-680, Type III, is potentially dangerous to personnel and property. Eye and skin protection is required. Avoid repeated and prolonged skin contact. Wash hands immediately after exposure. Do not use near open flame or excessive heat. Use only in areas with good ventilation.

Using wiping rags and cleaning solvent, remove dirt and contaminants from all components.

4-21. 3-INCH FUEL HOSE ASSEMBLY HOSE REPAIR -cont.

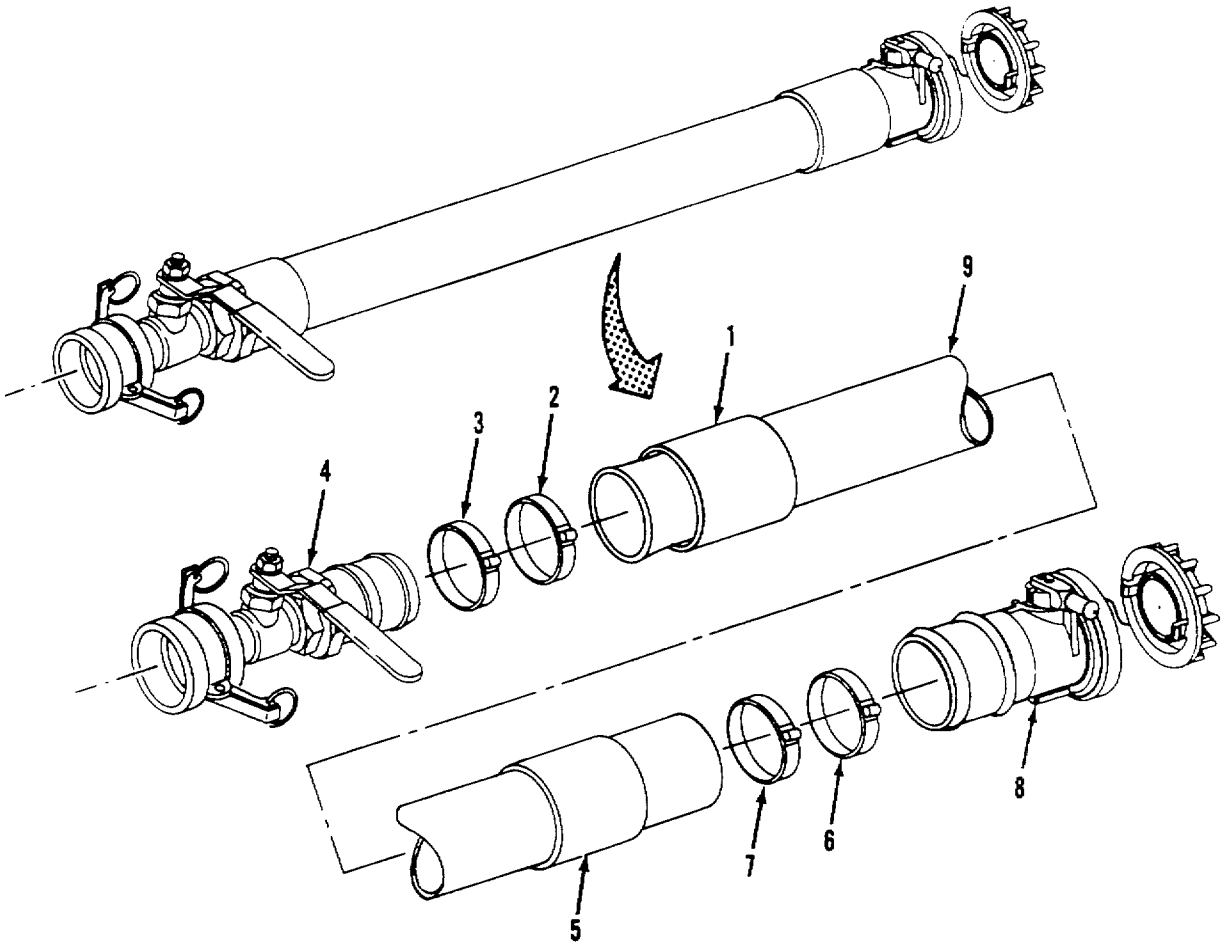

Figure 4-16. 3-Inch Fuel Hose Disassembly.

4-21. 3-INCH FUEL HOSE ASSEMBLY HOSE REPAIR -CONT.

c. Inspection. Refer to figure 4-17.

(1) Inspect ball valve assembly (4) for cracks, corrosion and damaged quick disconnect coupling.

(2) Inspect valved dry break coupling assembly (8) for cracks, corrosion and damaged coupling body.

(3) Inspect hose (9) for cuts, tears, punctures, bulges and delamination.

(4) Inspect ends of hose (9) for damage or missing ground wires. Perform continuity test of ground wire from one end of hose to the other. Continuity must exist.

(5) Inspect ground wires at both ends of hose (9). At least 1/2 inch of wire must be exposed. If required, trim back hose material to obtain correct wire length.

d. Repair.

(1) Replace damaged components and all mandatory replacement parts.

(2) Repair ball valve assembly (para 4-22).

(3) Repair valved dry break coupling assembly (para 4-18).

e. Assembly. Refer to figure 4-17.

(1) Slide sleeve (5) onto hose (9) and position it about 12 inches back from end of hose.

(2) Fold ends of grounding wires into hose (9).

(3) Push valved dry break coupling assembly (8) into end of hose (9).

(4) Slide sleeve (1) onto hose (9) and position it about 12 inches back from end of hose.

(5) Push ball valve assembly (4) into end of hose (9).

(6) Perform continuity test between ball valve assembly (4) and valved dry break coupling (8) to ensure ground wires are firmly seated. Continuity must exist.

(7) Wrap end of clamp (1, figure 4-18) around hose (3) and through seal (2). Position clamp about 1-inch from end of hose.

(8) Wrap another loop of clamp (1) around hose (3) and through seal (2).

(9) Position tag end of clamp (1) in slots of clamping tool (4). Tool nose (5) should fit snug against seal (2).

(10) Apply pressure to gripper lever (6) and turn handle (7) until clamp (1) is snug. Tool will lock in place when correct tension is applied. Reposition tool as required.

14-21. 3-INCH FUEL HOSE ASSEMBLY HOSE REPAIR -cont

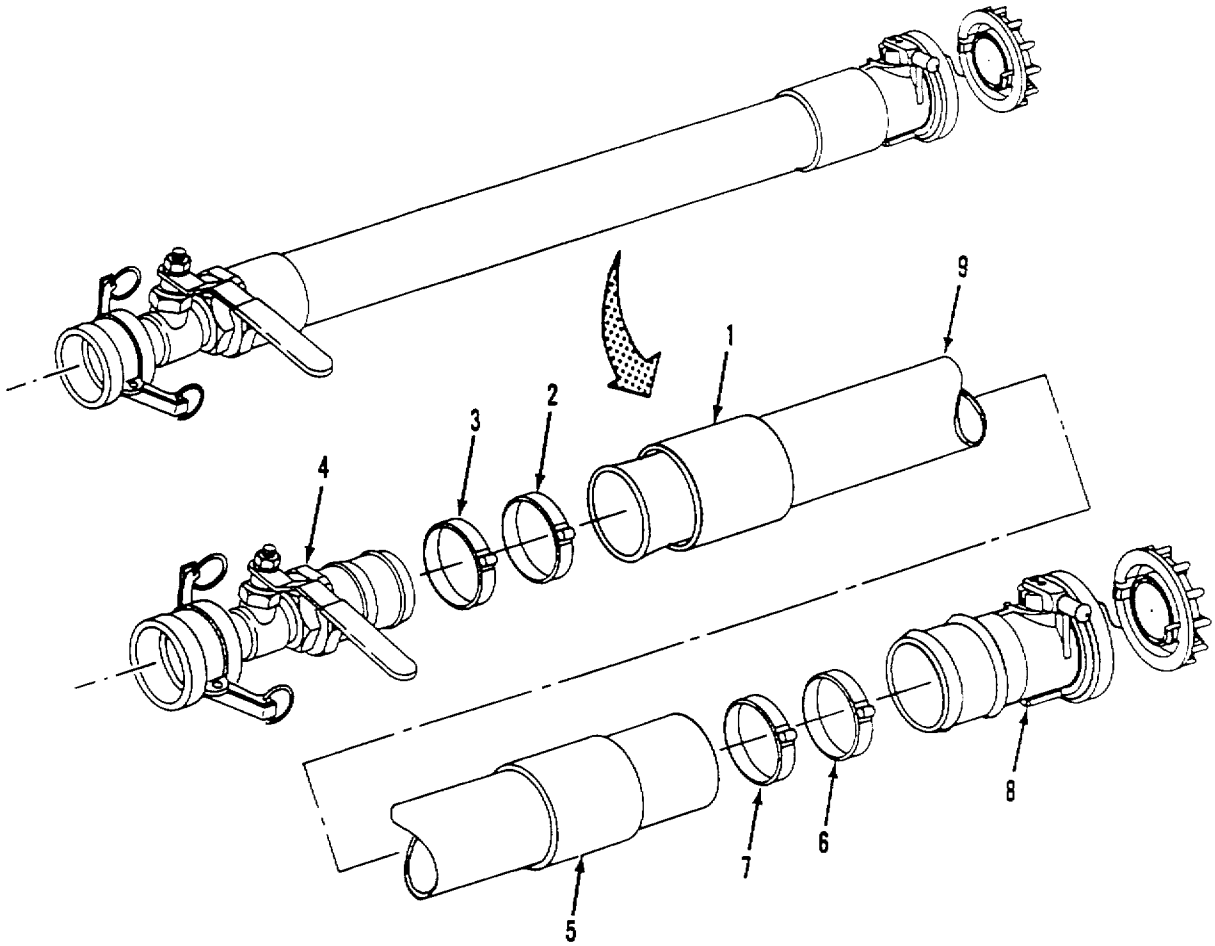

Figure 4-17. 3-inch Fuel Hose Assembly.

4-21. 3-INCH FUEL HOSE ASSEMBLY REPAIR -cont

CAUTION
Strapping can damage hose if over tightened.

(11) Turn handle (7) to the right (clockwise) to tighten strapping (1). Continue turning handle until strapping stops moving through seal (2).

CAUTION
Strapping may break if operator does not release tension on handle when bending over seal.

(12) While reversing handle (7) 3/4 turn, roll tool (4) to opposite side of seal (2). (This will bend strapping and prevent it from slipping through seal when tool is removed.)

(13) Pull cutting handle (8) on tool to cut strapping (1).

(14) Remove tool (4) while holding strapping stub down on seal (2) with thumb.

(15) Clinch end of clamp (1) by hammering down tag end clamp over seal (2).

(16) Repeat steps (7) through (15) for three remaining clamps (2,3, and 7, figure 4-17). Clamps should be 1 inch from end of hose and 2 inches apart.

(17) Slide sleeve (5) over clamps (6 and 7).

(18) Slide sleeve (1) over clamps (2 and 3).

(19) Install hose assembly in fuel system (para 3-4b).

(20) Start up fuel system (para 2-12g) and test repaired hose for leaks.

4-21. 3-INCH FUEL HOSE ASSEMBLY REPAIR -cont

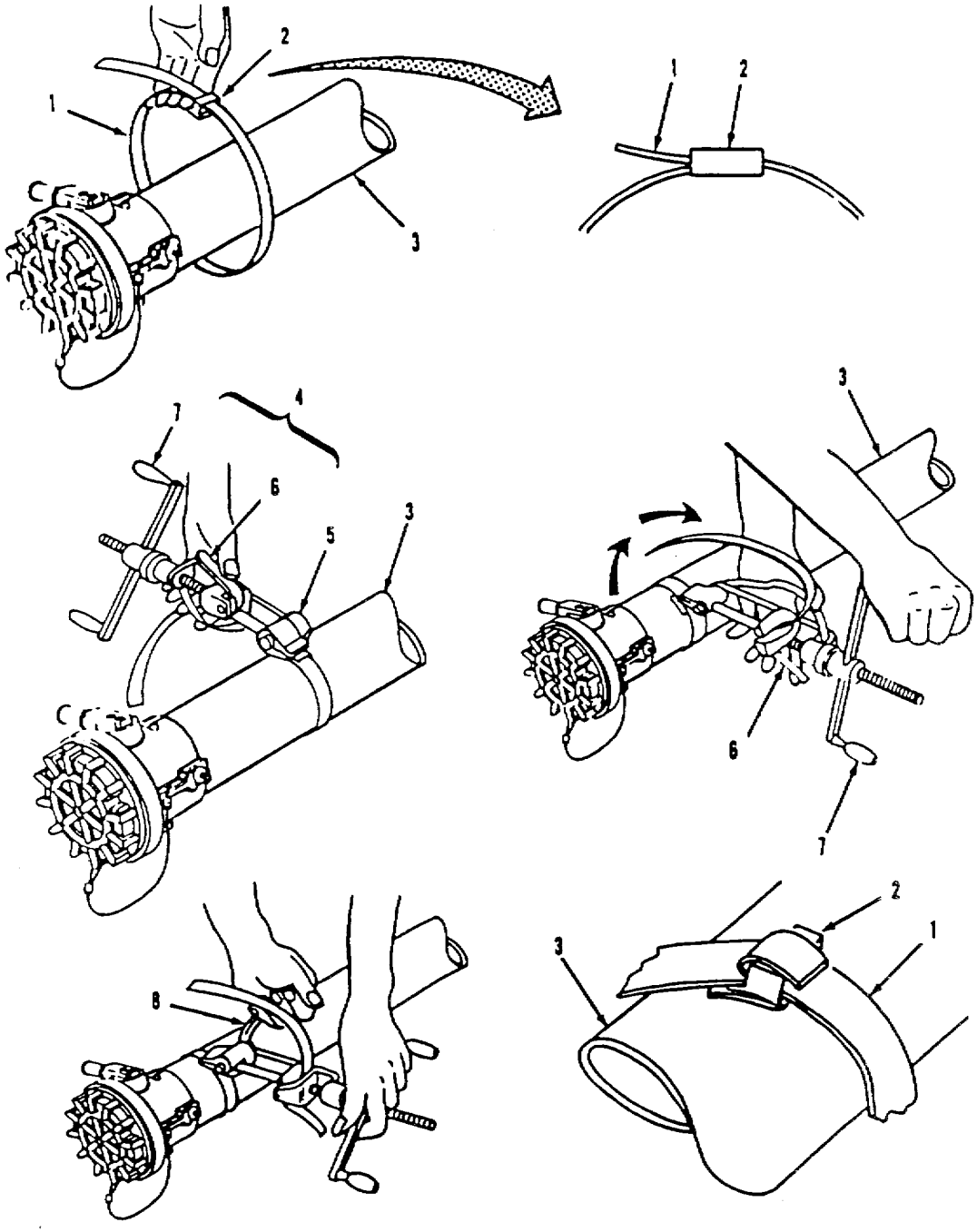

Figure 4-18. 3-Inch Fuel Hose Clamp Installation.

4-22. BALL VALVE ASSEMBLY REPAIR

This task consists of: a. Disassembly b. Cleaning c. Inspection d. Repair e. Assembly

INITIAL SET-UP:

Tools:
General Mechanics Tool Kit (App B, Sect III, Item 1)
Vise (App B, Sect III, Item 2)

Equipment Condition:
Ball valve assembly removed (para 4-21)

Material/Parts:
Cleaning Solvent (Item 1, App F)
Wiping Rag (Item 2, App F)
Anti-seize Tape (Item 5, App F)

a. Disassembly. Refer to figure 4-19.

NOTE

Ensure that all parts identified as mandatory replacement parts are discarded and replaced with new components.

(1) Place body of ball valve (3) in vise.

(1A) (Model HTARS101) Remove retaining ring (1A) and dust plug (1B) from female coupling (2).

(2) Remove gasket (1) from female coupling (2).

(3) Remove female coupling (2) from ball valve (3).

(4) Remove ball valve (3) from adapter (4).

b. Cleaning.

WARNING

Dry cleaning solvent, P-D-680, Type III, is potentially dangerous to personnel and property. Eye and skin protection is required. Avoid repeated and prolonged skin contact. Wash hands immediately after exposure. Do not use near open flame or excessive heat. Use only in areas with good ventilation.

Using wiping rags and cleaning solvent, remove dirt and contaminants from all components.

c. Inspection. Refer to figure 4-19.

(1) Inspect female coupling (2) for cracks, broken locking arms and damaged threads.

(2) Inspect adapter (4) for cracks and damaged threads.

(3) Inspect ball valve (3) for cracks, corrosion, damaged threads and bent or missing control handle.

d. Repair. Replace damaged or defective components. Replace all mandatory replacement parts.

4-22. BALL VALVE ASSEMBLY REPAIR -cont.

e. Assembly. Refer to figure 4-19.

(1) Apply anti-seize tape to male threads of female coupling (2) and adapter (4).

(2) Install ball valve (3) on adapter (4).

(3) Install female coupling (2) on ball valve (3).

NOTE
Make sure gasket is fully seated in groove of female coupling.

(4) Install gasket (1) in female coupling (2).

(5) Remove body of ball valve (3) from vise.

(5A) (Model HTARS101) Install retaining ring (1A) and dust plug (1B) on female coupling (2).

(6) Install ball valve assembly on fuel hose (para 4-21).

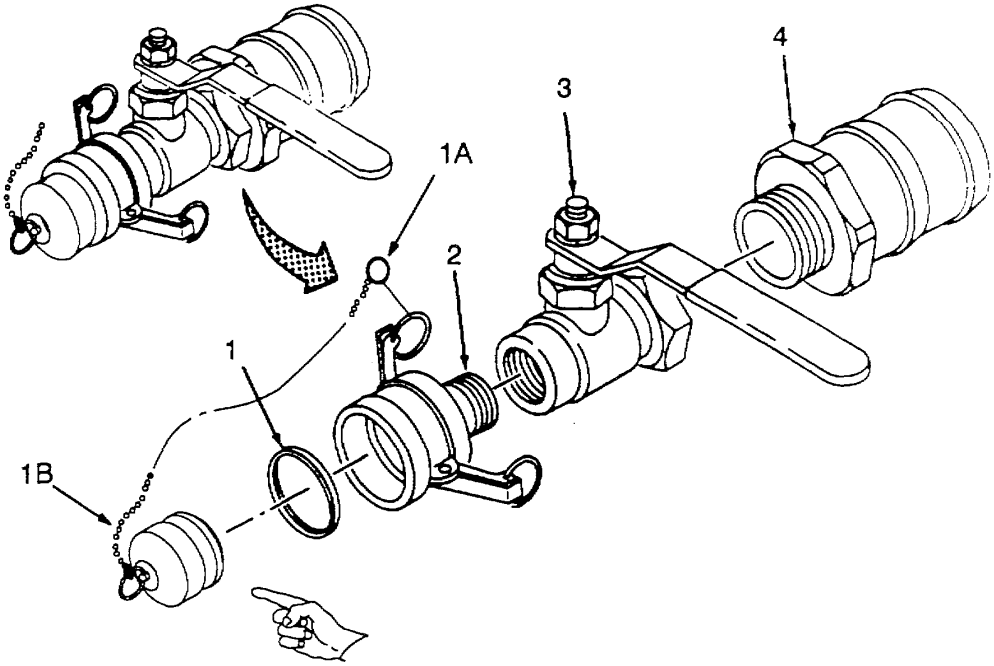

NOTE:
RING (1A) AND PLUG (1B) USED ON MODEL HTARS 101 ONLY.

Figure 4-19. Ball Valve Assembly Repair.

4-23. ADAPTER REPAIR.

Repair of the adapters is limited to repairing the attached valved or non-valved dry lock coupling. Refer to para 4-14 to repair non-valved dry break couplings. Refer to para 4-18 to repair valved dry break couplings.

Section V. PREPARATION FOR STORAGE OR SHIPMENT

4-24. SECURITY PROCEDURES.

Refer to AR 190-11 or AR 190-13.

4-25. ADMINISTRATIVE STORAGE.

WARNING

To prevent injury to personnel and damage to equipment, all fuel system components must be cleaned and purged before administrative storage.

a. Placement of equipment in administrative storage should be for short periods of time when a shortage of maintenance effort exists. Items should be mission ready within 24 hours or within the time factors as determined by the directing authority. During the shortage period, appropriate maintenance records will be kept.

b. Before placing equipment in administrative storage, Preventive Maintenance Checks and Services should be completed, shortcomings and deficiencies should be corrected, and all modification work orders (MWOs) should be applied.

c. Storage Site Selection. Inside storage is preferred for items selected for administrative storage. If inside storage is not available, keep fuel system components away from corrosive materials, such as saltwater spray.

CHAPTER 5

DIRECT SUPPORT MAINTENANCE INSTRUCTIONS

DIRECT SUPPORT MAINTENANCE PROCEDURES

5-1. INTRODUCTION.

This Chapter contains instructions for performing Direct Support level maintenance on components of the HEMTT Tanker Aircraft Refueling System (HTARS).

5-2. SINGLE POINT REFUELING NOZZLE ASSEMBLY (D1) REPAIR.

This task consists of:

a. Disassembly
b. Cleaning
c. Inspection
d. Repair
e. Assembly
f. Testing

INITIAL SET-UP:

Tools:
General Mechanics Tool Kit (App B, Sect III, Item 1)
Shop Equip., Electrical Repair (App B, Sect III, Item 5)
Adapter (App B, Sect III, Item 3)

Equipment Condition:
Handles and inlet elbow removed (para 4-13)

Personnel Required:
(Model HTARS101) Two

Material/Parts:
Cleaning Solvent (Item 1, App F)
Wiping Rag (Item 2, App F)
Silicone Compound (Item 3, App F)
Anti-seize Tape (Item 5, App F)
Repair Kit (Item 22, App J)
Cotter Pin (Item 23, App J)
(Model HTARS101) Petrolatum (Item 6, App F)
(Model HTARS101) Sealing Compound
(7, App F)
(Model HTARS101) Seal Kit (tem 24, App J)
(Model HTARS101) Parts Kit (tem 25, App J)
(Model HTARS101) Parts Kit (tem 26, App J)

NOTE

Ensure that all parts identified as mandatory replacement parts are discarded and replaced with new components.

5-2. NOZZLE ASSEMBLY (DI) REPAIR -cont.

a. Disassembly.

NOTE

To prevent loss of balls and aid assembly, place a suitable container under regulator opening. Catch all balls as they fall from regulator.

(1) (Model HTARS101) Remove screw (1, figure 5-1) and attached preformed packing (2) from regulator (4).

(2) (Model HTARS101) Position regulator (4) so that opening for balls (3) is pointing down.

(3) (Model HTARS101) Rotate regulator (4) back and forth on body (6) until 39 balls (3) are removed.

(4) (Model HTARS 101) Remove preformed packing (5) from body (6).

(5) (Model HTARS101) Position regulator (4) on table with outlet arrow (7) pointing up.

CAUTION

Seal must be cut to be removed. Use care not to damage sealing surfaces of housing.

(6) (Model HTARS101) Cut outer seal (1, figure 5-1A) and remove preformed packing (2) from exterior of housing (25).

WARNING

To prevent injury to personnel and damage to the equipment, make sure outer piston is held in place securely before removing retaining ring. Two personnel are required to safely remove the outer piston and internal regulator spring.

(7) (Model HTARS101) Using a wooden block or handle of mallet, press down on outer piston (7) until piston unseats from retaining ring (1). Hold piston in position and remove retaining ring. Slowly release pressure and allow piston to extend.

(8) (Model HTARS101) Remove outer piston (7), inner piston (6) and spring (8) from housing (25).

(9) (Model HTARS101) Remove screw (4) and seal (5), then separate inner piston (6) from outer piston (7).

(10) (Model HTARS101) Remove four screws (9) and flat washers (10).

NOTE

To prevent loss of ball, spring and ring, place a suitable container under housing when removing retainer.

(11) (Model HTARS101 Lift retainer 11) from housing (25) and remove ring (12), ball (13) and spring (14).

(12) (Model HTARS101) Remove preformed packing (15) from housing (25).

5-2. NOZZLE ASSEMBLY (D) REPAIR -cont.

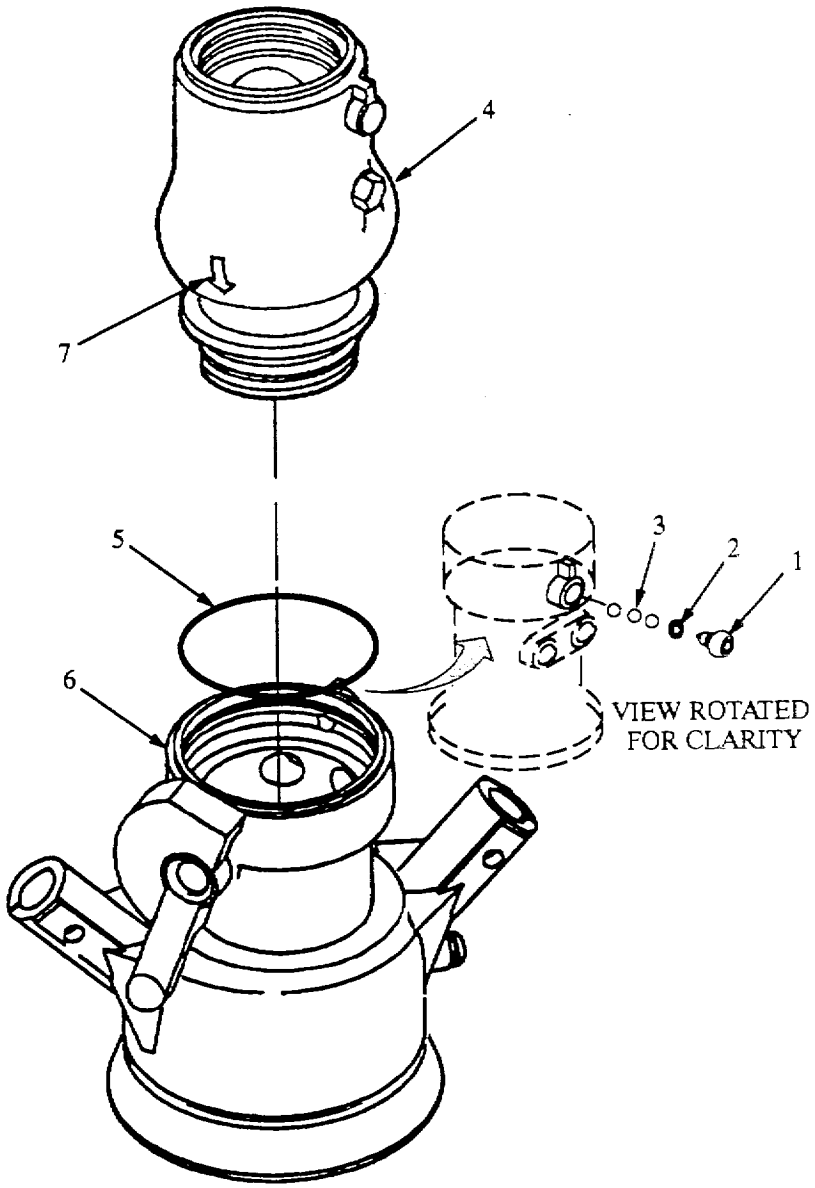

Figure 5-1. Regulator Removal and Installation (Model HTARS101).

5-2. NOZZLE ASSEMBLY (D) REPAIR -cont.

CAUTION

Seals must be cut to be removed. Use care not to damage sealing surfaces of housing.

(13) (Model HTARS101) Cut seal (16) and remove preformed packing (17).

(14) (Model HTARS 101) Remove spacer (18) from housing (25).

(14) (Model HTARS101) Cut seal (19) and remove preformed packing (20).

(15) (Model HTARS101) Remove breather (23) from housing (25).

(16) (Model HTARS101) Remove ground clip (24) from end of housing (25).

5-2. NOZZLE ASSEMBLY (D1) REPAIR - cont.

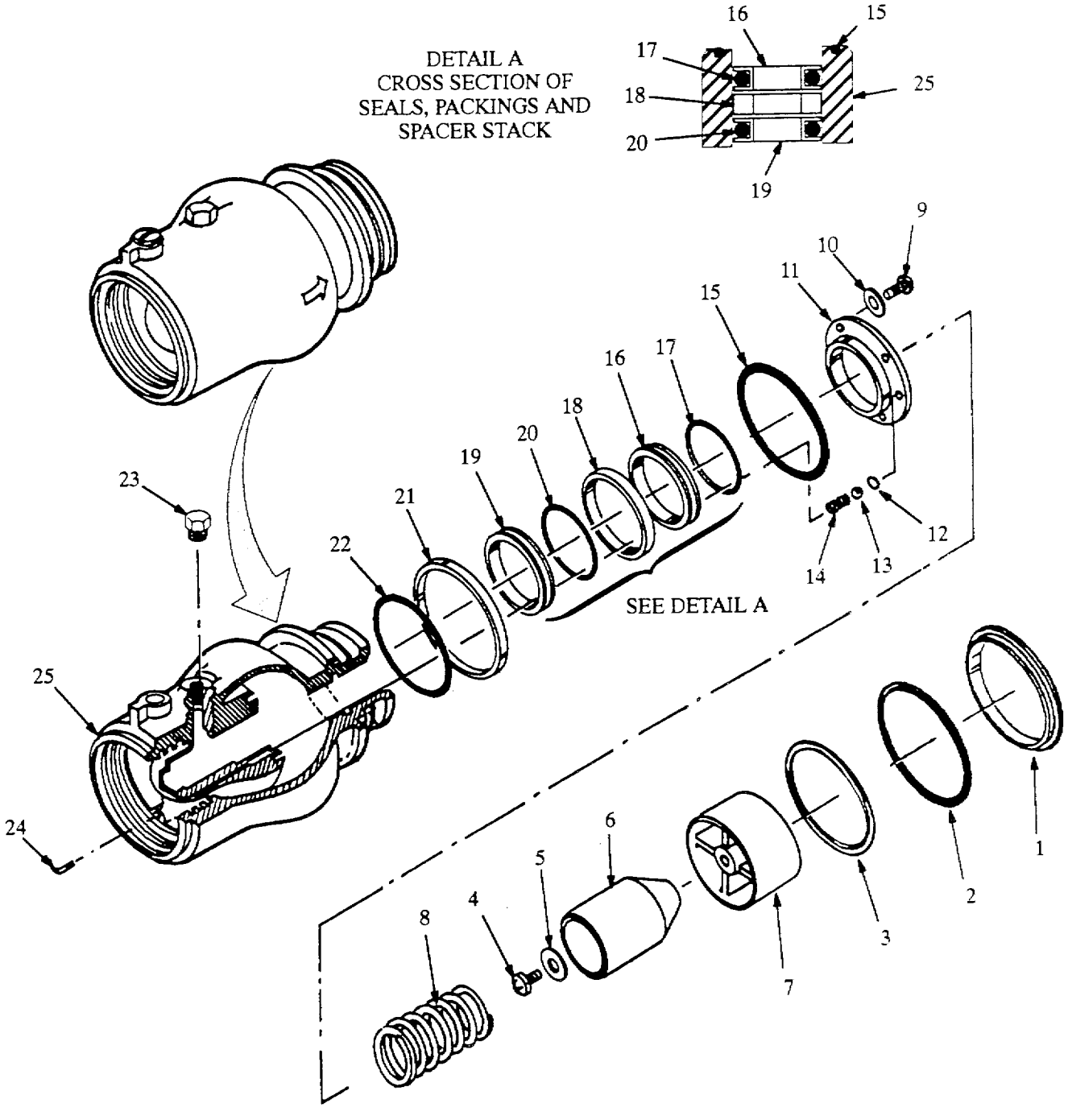

Figure 5-1A. Regulator Repair (Model HTARS101).

5-2. NOZZLE ASSEMBLY (D1) REPAIR.

NOTE

To prevent loss of balls and aid assembly, place a suitable container under collar opening. Catch all balls as they fall from body.

(17) Remove screw (1, figure 5-1B) and attached preformed packing (2) from collar (5).

(18) Position collar (5) so that opening for balls (3) is pointing down.

(19) Rotate body (9) back and forth on collar (5) until 49 balls (3) are removed.

(20) Connect collar (5) to adapter (10).

(21) Rotate body (9) to the left until index lug (7) alines with groove (6) in collar (5).

(22) Remove body (9) from collar (5).

(23) Remove collar (5) from adapter (10).

(24) If required, cut and remove bumper (4) from collar (5).

(25) Position body (9) with poppet pointing up, then rotate lever (8) to open position (poppet extended).

(26) Remove cotter pin (1, figure 5-2) and unscrew poppet (2) from shaft (3).

(27) Pull seal (6) and attached parts from body (13).

(28) Remove snap ring (4) and plate (5) from seal (6).

(29) Remove three lock pins (8) and springs (9) from body (13).

(30) Remove three index pins (7) from body (13).

(31) Remove preformed packing (10) from body (13).

(32) Remove two plugs (11 and 12) from body (13).

CAUTION

To aid assembly, note and record position of plate on lever. Correct alinement of these parts during assembly is critical to operation of the nozzle.

(33) Working through plug hole, remove four socket heat screws (1, figure 5-3) that secure plate (6) to lever (11).

(34) Lift plate (6) and attached parts from body (13).

(35) Push out dowel pin (2) and separate link (7) from shaft (8).

(36) Remove cotter pin (3) and nut (4) from pin (5).

5-2. NOZZLE ASSEMBLY (D1) REPAIR - cont.

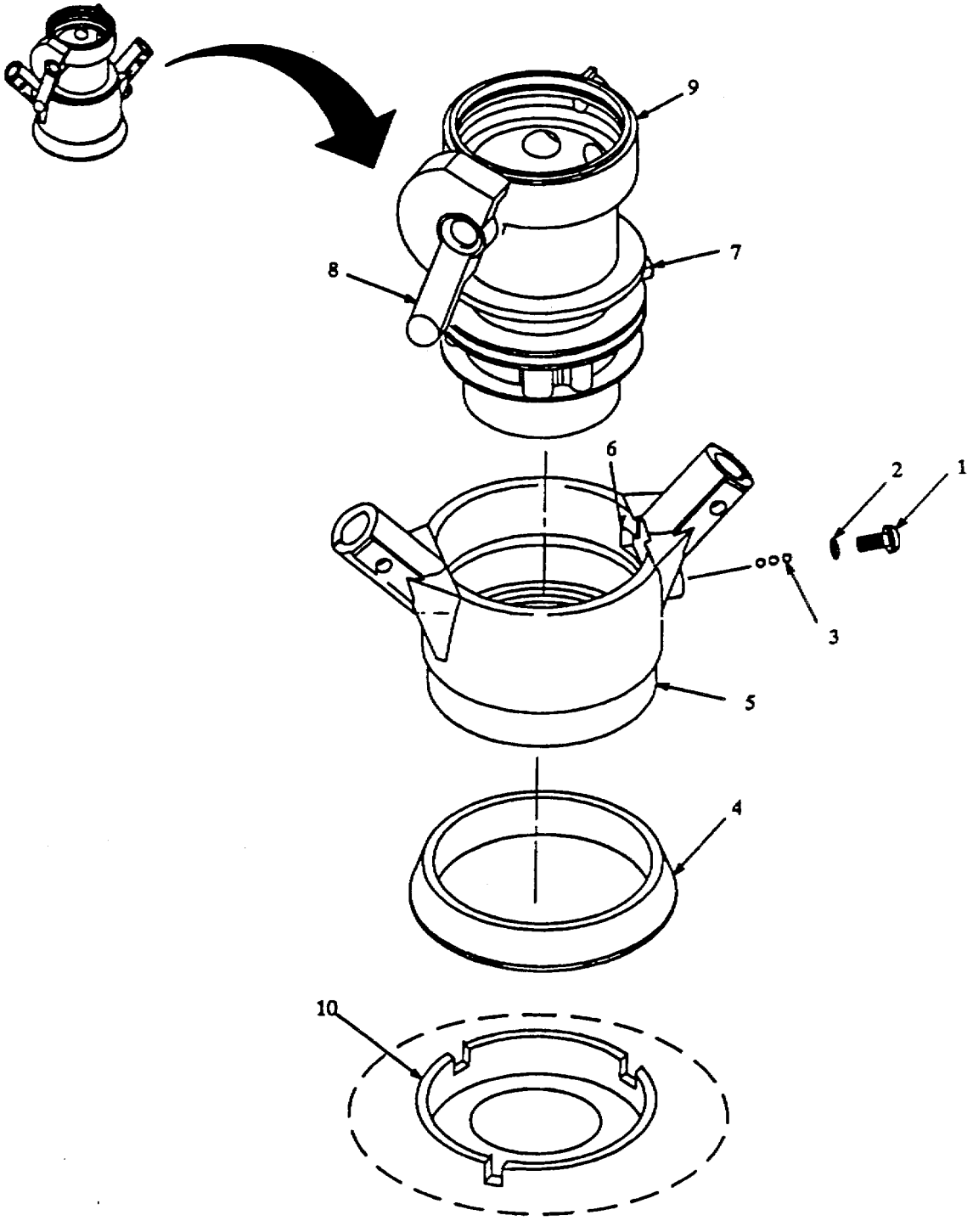

Figure 5-1B. Nozzle Body and Collar Repair

5-2. NOZZLE ASSEMBLY (D1) REPAIR - cont.

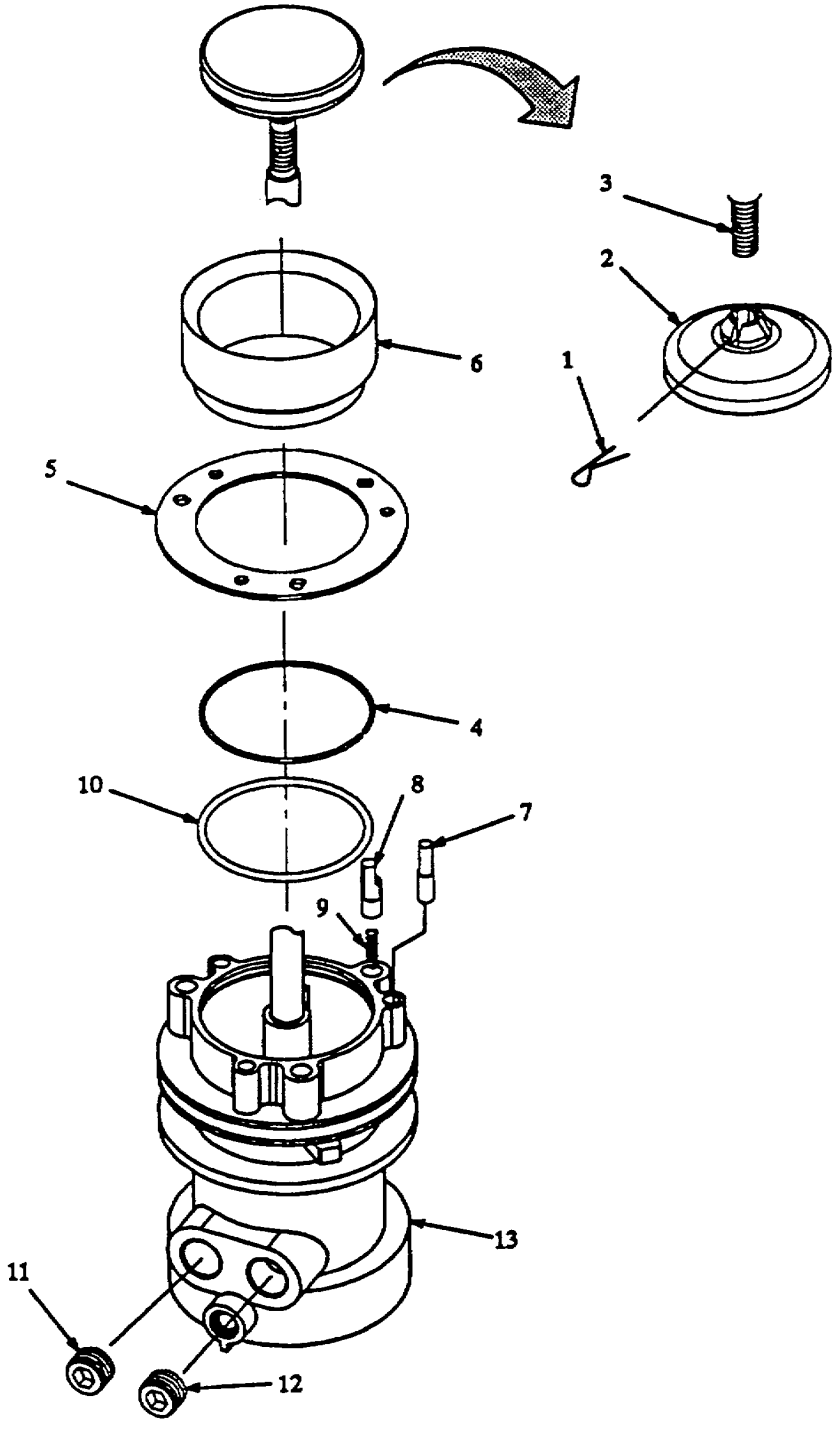

Figure 5-2. Nose Seal Repair.

5-2. NOZZLE ASSEMBLY (D1) REPAIR - cont.

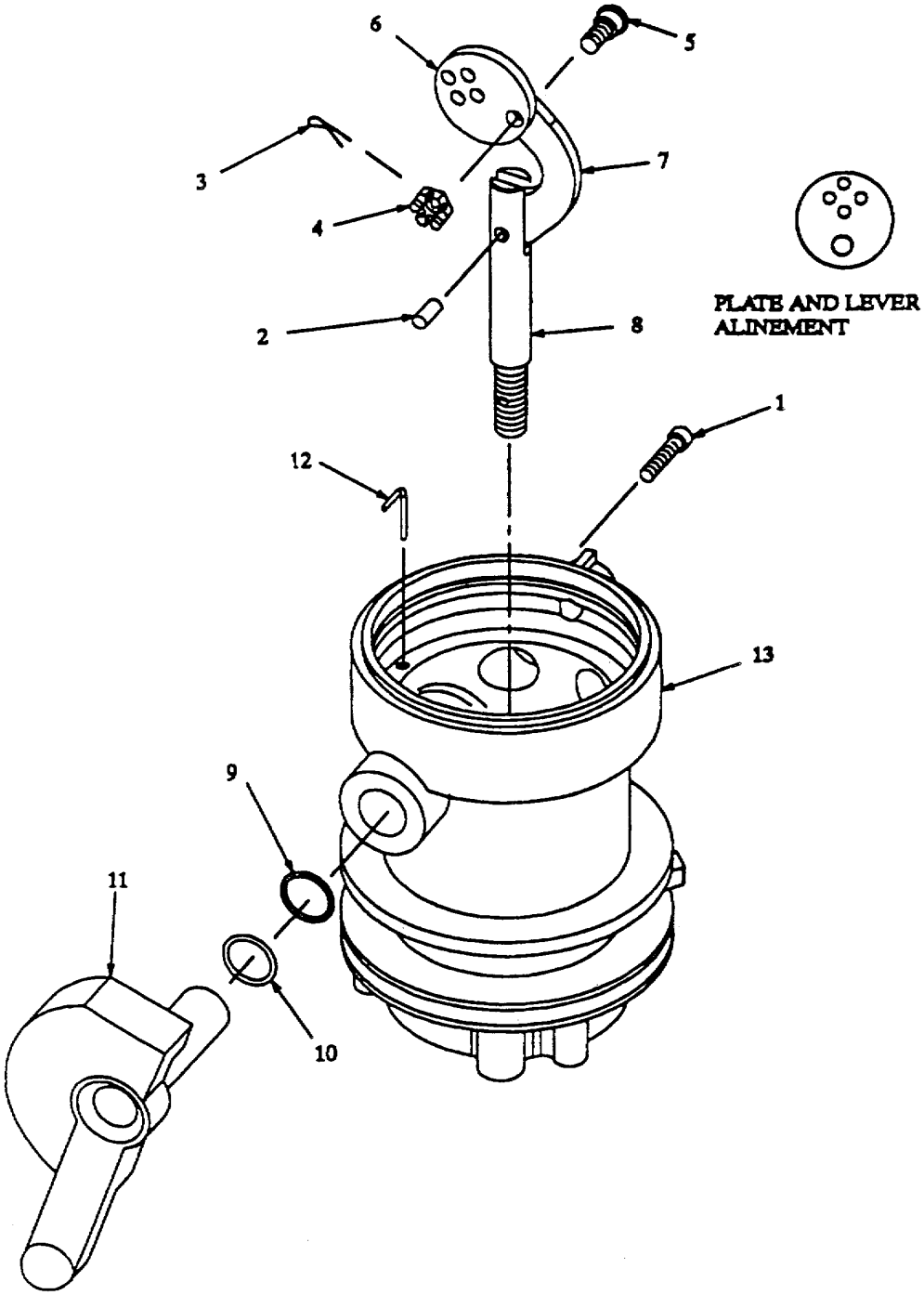

Figure 5-3. Control Linkage Repair.

5-2. NOZZLE ASSEMBLY (D1) REPAIR - cont.

(21) Unscrew pin (5) from plate (6) and remove link (7).

(22) Remove ground clip (12) from body (13).

(23) Remove lever (11), backup ring (10) and preformed packing (9) from body (13).

b. Cleaning.

WARNING

Dry cleaning solvent, P-D-680, Type III, is potentially dangerous to personnel and property. Eye and skin protection is required. Avoid repeated and prolonged skin contact. Wash hands immediately after exposure. Do not use near open flame or excessive heat. Use only in areas with good ventilation.

Using wiping rags and cleaning solvent, remove dirt and contaminants from all components.

c. Inspection.

NOTE

Unless otherwise specified, steps apply to all models.

(1) Inspect collar (5, figure 5-1B) for cracks, corrosion and worn adapter mating surfaces.

(2) (Model HTARS101) Inspect housing (25, figure 5-1A) for cracks, corrosion, dents, gouges, abrasions and worn ball races.

(3) (Model HTARS101) Inspect inner piston (6) and outer piston (7) for scratches. Parts must be smooth and free of imperfections.

(4) Inspect body (7, figure 5-1B) for cracks, corrosion and damaged threads.

(5) Inspect poppet (2, figure 5-2) for damaged threads and corrosion or pitting along sealing surface.

(6) Inspect shaft (3) for corrosion and damaged threads.

(7) Inspect lever (11, figure 5-3) for cracks, damaged threads and corrosion.

(8) Inspect plate (6) and pin (5) for damaged threads.

(9) Inspect link (7) for cracks and elongated mounting holes.

d. Repair. Replace damaged parts and all sealing components. Replace all mandatory replacement items.

e. Assembly.

(1) Push straight leg of ground clip (12, figure 5-3) into body (13). Make sure exposed portion of clip is pressed down tight and points towards outside of body (not inward).

(2) Position link (7) on shoulder of pin (5). Make sure bend in link is positioned as shown.

5-2. NOZZLE ASSEMBLY (D1) REPAIR - cont.

NOTE

Threaded hole in plate is chamfered (beveled) on one side. Pin must be install in chamfered side of hole. Installing screw on wrong side of plate will prevent pin from tightening all the way down.

(3) Screw pin (5) and attached link (7) onto plate (6).

5-2. NOZZLE ASSEMBLY (D1) REPAIR - cont.

(4) Install nut (4) on pin (5). Torque nut to 80-125 inch pounds while alining cotter pin hole.

(5) Install cotter pin (3) through nut (4) and pin (5).

(6) Aline link (7) with rod (8) and install dowel pin (2). Make sure plate (6), link (7) and shaft (8) are assembled in the position shown.

(7) Lower shaft (8) and attached parts into bore guide of body (13). Make sure shaft goes down far enough so that dowel pin (2) is secured by bore guide.

(8) Lubricate preformed packing (9) with silicone compound.

(9) Install backup ring (10) and preformed packing (9) on lever (11). Make sure backup ring is installed first. Install lever (11) in body (13).

CAUTION

Correct alinement of plate and lever is critical to proper operation of the nozzle. Aline plate and lever before installing socket head screws.

(10) Position lever (11) so that handle is pointing straight down (OPEN position). When viewed from inside the body (13), the four screw holes must be at the top of the shaft (8) as shown.

(11) Aline plate (6) with bolt hole pattern on end of lever (11). Pin (5) will be at bottom of screws holes when plate is correctly installed.

(12) Working through plug hole in body (13), install four socket heat screws (1) through plate (6) and into lever (11). Tighten screws securely.

CAUTION

Do not apply more than 1-1/2 wraps of anti-seize tape to plug threads, Excessive tape may cause body to crack during plug installation.

(13) Apply anti-seize tape to threads of two plugs (11 and 12, figure 5-2).

(14) Install two plugs (11 and 12) in body (13).

(15) Lubricate preformed packing (10) with silicone compound, then install packing in body (13).

(16) Install three index pins (7) in body (13).

CAUTION

Lock pins must be installed with flat surfaces facing out from body. Installing lock pins in the wrong direction will cause body to lock onto collar, preventing nozzle operation.

(17) Install springs (9) and lock pins (8) in body (13).

5-2. NOZZLE ASSEMBLY (D1) REPAIR - cont

(18) Install plate (5) and snap ring (4) on seal (6).

(19) Aline plate (5) with lock pins (8) and index pins (7), then press seal (6) and attached parts onto body (13). Make sure seal is fully seated on body.

(20) Rotate lever (11, figure 5-3) to OPEN position.

(21) Screw poppet (2, figure 5-2) onto shaft (3) until slots in poppet aline with cotter pin hole in shaft.

(22) Rotate lever (11, figure 5-3) to CLOSE position.

(23) Place a straight edge (rule) across top of seal (6, figure 5-2) and measure gap between edge of rule and top of poppet (2). Gap should be 0.070 to 0.110 inch.

NOTE

Gap between straight edge and poppet will change 0.020 inch for every 1/4 turn of poppet.

(24) If gap is too small, rotate lever (11, figure 5-3) to OPEN and turn poppet (2, figure 5-2) 1/4 turn to the right. If gap is too large, rotate lever (11) to OPEN and turn poppet (2) 1/4 turn to the left.

(25) Repeat steps (22, 23 and 24) until gap is within tolerance.

CAUTION

Ends of cotter pin must be bent around slotted portion of poppet to prevent jamming of shaft in body guide bore.

(26) Install cotter pin (1, figure 5-2) through poppet (2) and into shaft (3). Make sure ends of cotter pin are bent around slots in poppet.

(27) Set lever (8, figure 5-1B) to CLOSE position.

WARNING

To prevent injury to personnel, wear protective gloves when installing bumper. Bumper must be softened in hot water and installed while still hot. Failure to wear protective gloves could result in serious burns.

(28) If removed, soak new bumper (4) in hot water (160-180°F) until soft. While still soft and pliable, press bumper onto collar (5).

(29) Position body (9) on collar (5).

(30) While holding collar (5), aline index lug (7) on body (9) with groove (6) in collar (5). Push body into collar, then turn body to the right until body and collar engage.

5-2. NOZZLE ASSEMBLY (D) REPAIR -cont.

(31) Lubricate preformed packing (2) with silicone compound and install on screw (1).

(32) Position collar (5) so that opening for balls (3) is pointing up.

NOTE

Do not lubricate balls with any type of oil, grease or compound. Lubricants will make ball installation difficult.

(33) Install 49 balls (3) in collar (5). Turn body (9) back and forth on collar (5) to aid installation of balls.

(34) Install preformed packing (2) and screw (1) in collar (5)

NOTE

(Model HTARS101) To aid installation, lubricate all preformed packings and seals with petrolatum.

(35) (Model HTARS101) Push straight leg of ground clip (24, figure 5-1A) into housing (25). Make sure exposed portion of clip is pressed down tight and points towards outside of housing (not inward).

(36) (Model HTARS101) Install breather (23) in housing (25).

(37) (Model HTARS101) Position preformed packing (20) in seal (19). Install assembled components in housing (25).

(38) (Model HTARS101) Install spacer (18) in housing (25).

(39) (Model HTARS101) Position preformed packing (20) in seal (19). Install assembled components in housing (25).

(40) (Model HTARS101) Install preformed packing (15) in housing (25).

CAUTION

To prevent malfunction of the assembled regulator, make sure spring, ball and ring are positioned correctly before tightening retainer. Vent hole in retainer must be alined with ball.

NOTE

To aid positioning and installation of ball and ring, apply petroleum jelly to components as required to hold parts in place.

(41) (Model HTARS101) Position spring (14), ball (13) and ring (12) in hole in housing (25).

CAUTION

To prevent malfunction of the assembled regulator, vent hole in retainer must be alined with ball.

(42) (Model HTARS101) Position retainer (11) in housing (25). Aline retainer vent hole with ball (13). Secure retainer (11) to housing (25) with four flat washers (10) and screws (9).

5-2. NOZZLE ASSEMBLY (D1) REPAIR - cont.

(43) (Model HTARS 101). Apply two drops of sealing coumpound to screw (4). Secure inner piston (6) to outer piston (7) with screw (4) and seal (5). Torque screw 18 to 20 inch pounds.

(44) (Model HTARS101) Place housing (25) on work table with outlet arrow pointing up. Insert spring (8) and assembled pistons (6 and 7) in housing (25).

WARNING

To prevent injury to personnel and damage to the equipment, make sure outer piston is held securely down when compressing spring. Two personnel are required to safely install the retaining ring.

(45) (Model HTARS101) Using a wooden block or handle of mallet, press down on outer piston (7) until top of piston clears retaining ring groove in housing (25). Hold piston in position and install retaining ring. Slowly release pressure and allow piston to extend.

(46) (Model HTARS101) Inset preformed packing (2) in seal (1). Install assembled components in packing groove on exterior of housing (25).

5-2. NOZZLE ASSEMBLY (D1) REPAIR - cont

(47) (Model HTARS101) Install preformed packing (5, figure 5-1) on body (6).

(48) (Model HTARS101) Push regulator (4) into body (6).

(49) (Model HTARS101) Position collar (6) so that opening for balls (3) is pointing up

(50) (Model HTARS101) Install 39 balls (3) in body (6). Turn regulator (4) back and forth on body to aid installation of balls.

(50) (Model HTARS101) Install preformed packing (2) and screw (1) in body (6).

f. Testing.

NOTE

The D1 Nozzle must be fully assembled to perform both functional and leakage tests. Refer to para 4-13 to assemble components of the nozzle.

(1) Functional Test. Refer to figure 5-6.

NOTE

The flat portion of lever should be beneath the flat portion of ramp on nozzle collar. This is the closed position and the handle should not turn.

(a) Attempt to move lever (1) to the OPEN position. Lever must not move to OPEN position.

(b) Connect nozzle (2) to test adapter (3) (para 2-12b).

(c) Rotate lever (1) to the OPEN position until it passes over center and stops against the internal stop.

(d) Grab handles (4) and attempt to remove nozzle (2) from adapter (3). Nozzle should not disconnect.

(e) Position lever (1) to CLOSE, then OPEN position. Repeat a minimum of five times. Lever should be not bind or require excessive force to operate and must lock over-center in the CLOSED position.

(f) Position lever (1) to CLOSED position, and disconnect nozzle (2) from adapter (3) (para 2-12b).

5-2. NOZZLE ASSEMBLY (DL) REPAIR - cont.

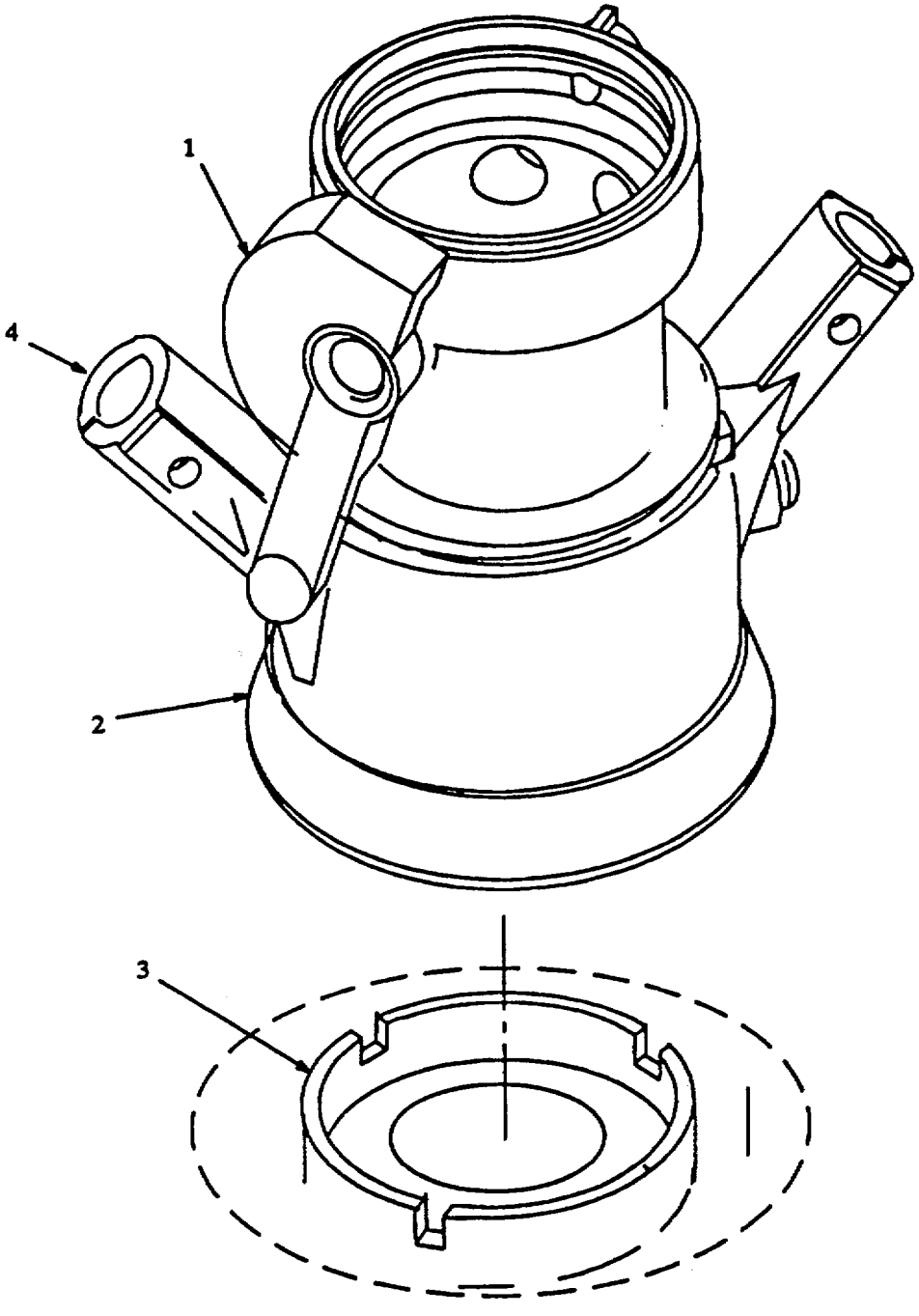

Figure 5-4. D1 Nozzle Functional Test.

5-2. NOZZLE ASSEMBLY (D1) REPAIR - cont.

(2) Leakage Test.

WARNING

System is under high pressure. Injury to personnel could result from ruptured line/fitting or faulty component. Always wear eye protection. Never exceed test pressure.

(a) Connect D1 nozzle to HEMTT tanker fuel hose.

(b) Connect D1 nozzle to recirculation adapter on HEMTT tanker.

NOTE

Be sure to bleed trapped air from CCR and recirulation nozzles and hoses before applying pressure. Errors in pressure indications may result from trapped air.

(c) Operate HEMTT tanker and adjust pressure to 5 psig (refer to TM 9-2320-279-10-1). Maintain pressure for one minute.

(d) Repeat test at 60 psig and 120 psig. There should be no evidence of external leakage from nozzle during any portion of test.

(e) Adjust HEMTT tanker pressure to 0 psig (refer to TM 9-2320-279-10-1).

(f) Disconnect D1 nozzle from recirculation adapter on HEMTT tanker.

(g) Operate HEMTT tanker and adjust to 5 psig (refer to TM 9-2320-279-10-1). Maintain pressure for one minute.

(h) Repeat test at 60 and 120 psig. There should be no evidence of external leakage from D1 nozzle during any portion of test.

(i) Shut down HEMTT tanker (refer to TM 9-2320-279-10-1)

(j) Disconnect D1 nozzle from HEMTT tanker fuel hose.

5-3. RECIRCULATION NOZZLE REPAIR.

This task consists of: a. Disassembly b. Cleaning c. Inspection d. Repair e. Assembly f. Testing

INITIAL SET-UP:

Tools:
General Mechanics Tool Kit (App B, Sect III, Item 1)
Shop Equip., Electrical Repair (App B, Sect III, Item 5)
Adapter (App B, Sect III, Item 3)

Equipment Condition:
Handles and inlet elbow removed (para 4-15)

Material/Parts:
Cleaning Solvent (Item 1, App F)
Wiping Rag (Item 2, App F)
Silicone Compound (Item 3, App F)
Anti-seize Tape (Item 5, App F)
Repair Kit (Item 22, App J)
Cotter Pin (Item 23, App J)

NOTE

Ensure that all parts identified as mandatory replacement parts are discarded and replaced with new components.

a. Disassembly.

(1) Remove screw (1, figure 5-5) and attached preformed packing (2) from collar (5).

NOTE

To prevent loss of balls and aid assembly, place a suitable container under collar opening. Catch all balls as they fall from body.

(2) Position collar (5) so that opening for balls (3) is pointing down.

(3) Rotate body (9) back and forth on collar (5) until 49 balls (3) are removed.

(4) Connect collar (5) to adapter (10).

(5) Rotate body (9) to the left until index lug (7) alines with groove r6) in collar (5).

(6) Remove body (9) from collar (5).

(7) Remove collar (5) from adapter (10).

(8) If required, cut and remove bumper (4) from collar (5).

(9) Position body (9) with poppet (2) pointing up, then rotate lever (8) to open position (poppet extended).

(10) Remove cotter pin (1, figure 5-6) and unscrew poppet (2) from shaft (3).

(11) Pull seal (6) and attached parts from body (12).

(12) Remove snap ring (4) and plate (5) from seal (6).

5-3. RECIRCULATION NOZZLE ASSEMBLY REPAIR – cont

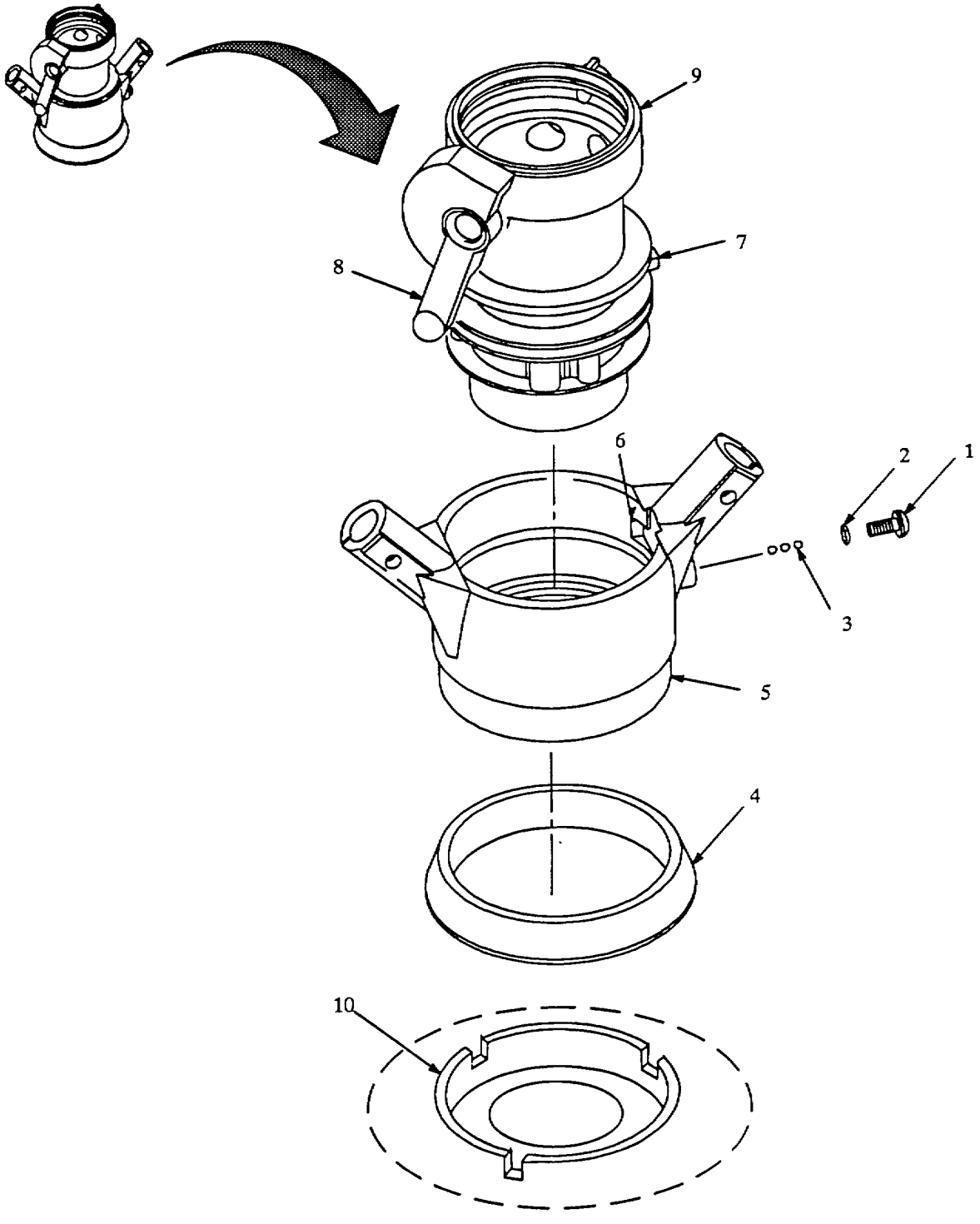

Figure 5-5. Nozzle Body and Collar Disassembly.

5-3. RECIRCULATION NOZZLE ASSEMBLY REPAIR - cont.

(13) Remove three lock pins (8) and springs (9) from body (12).

(14) Remove three index pins (7) from body (12).

(15) Remove preformed packing (10) from body (12).

(16) Remove plug (11) from body (12).

CAUTION

To aid assembly, note and record position of plate on lever. Correct alinement of these parts during assembly is critical to operation of the nozzle.

(17) Working through plug hole, remove four socket head screws (1, figure 5-7) that secure plate (6) to lever (11).

(18) Lift plate (6) and attached parts from body (13).

(19) Push out dowel pin (2) and separate link (7) from shaft (8).

(20) Remove cotter pin (3) and nut (4) from pin (5).

(21) Unscrew pin (5) from plate (6) and remove arm (7).

(22) Remove ground clip (12) from body (13).

(23) Remove lever (11), backup ring (10) and preformed packing (9) from body (13).

b. Cleaning.

WARNING

Dry cleaning solvent, P-D-680, Type III, is potentially dangerous to personnel and property. Eye and skin protection is required. Avoid repeated and prolonged skin contact. Wash hands immediately after exposure. Do not use near open flame or excessive heat. Use only in areas with good ventilation.

Using wiping rags and cleaning solvent, remove dirt and contaminants from all components.

c. Inspection.

(1) Inspect collar (5, figure 5-5) for cracks, corrosion and worn adapter mating surfaces.

(2) Inspect body (12, figure 5-6) for cracks, corrosion and damaged threads.

(3) Inspect poppet (2) for damaged threads and corrosion or pitting along sealing surface.

(4) Inspect shaft (3) for corrosion and damaged threads.

(5) Inspect lever (11, figure 5-7) for cracks, damaged threads and corrosion.

5-4. RECIRCULATION NOZZLE ASSEMBLY REPAIR - cont.

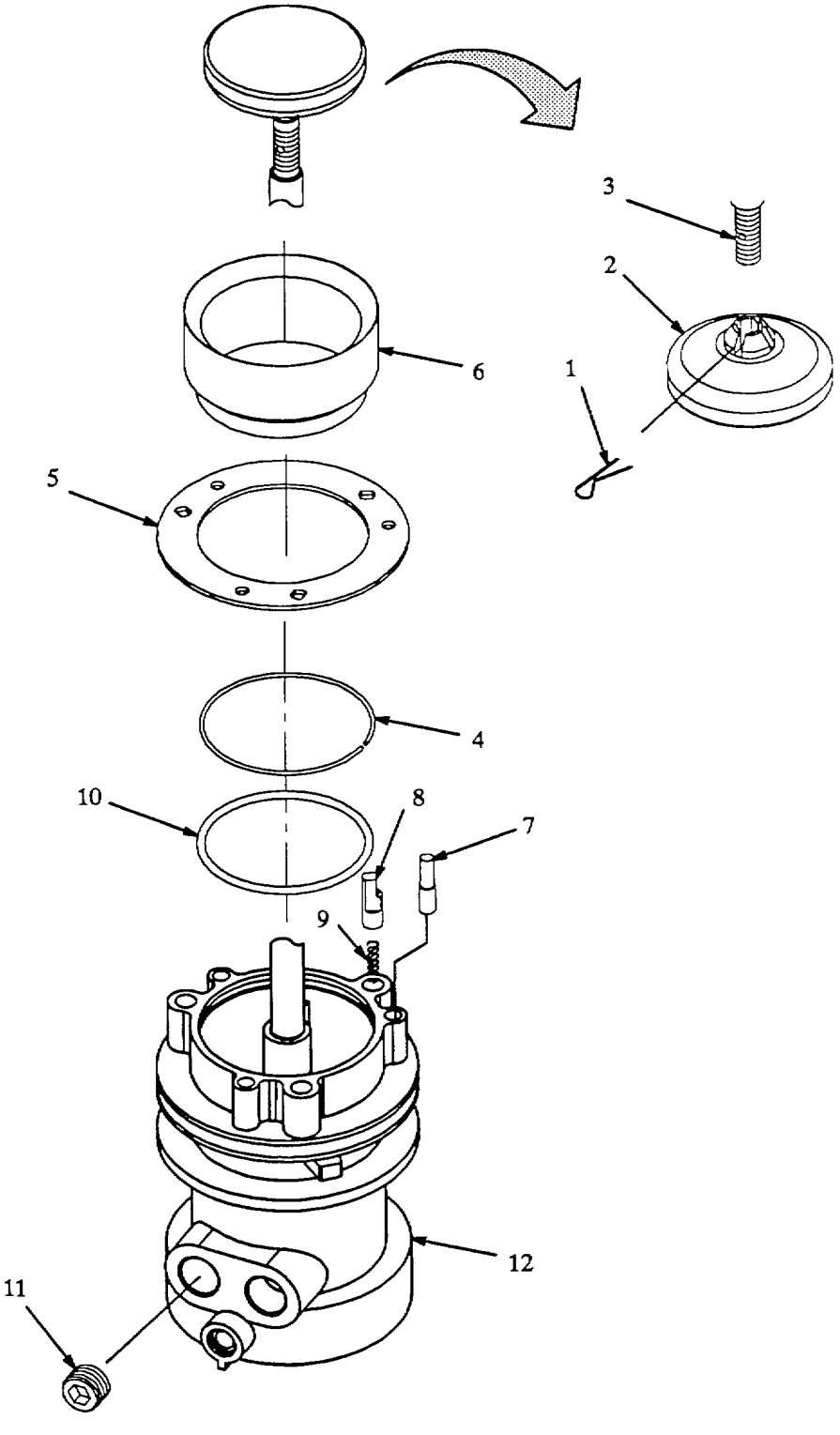

Figure 5-6. Nose seal Disassembly.

5-3. RECIRCULATION NOZZLE ASSEMBLY REPAIR - cont.

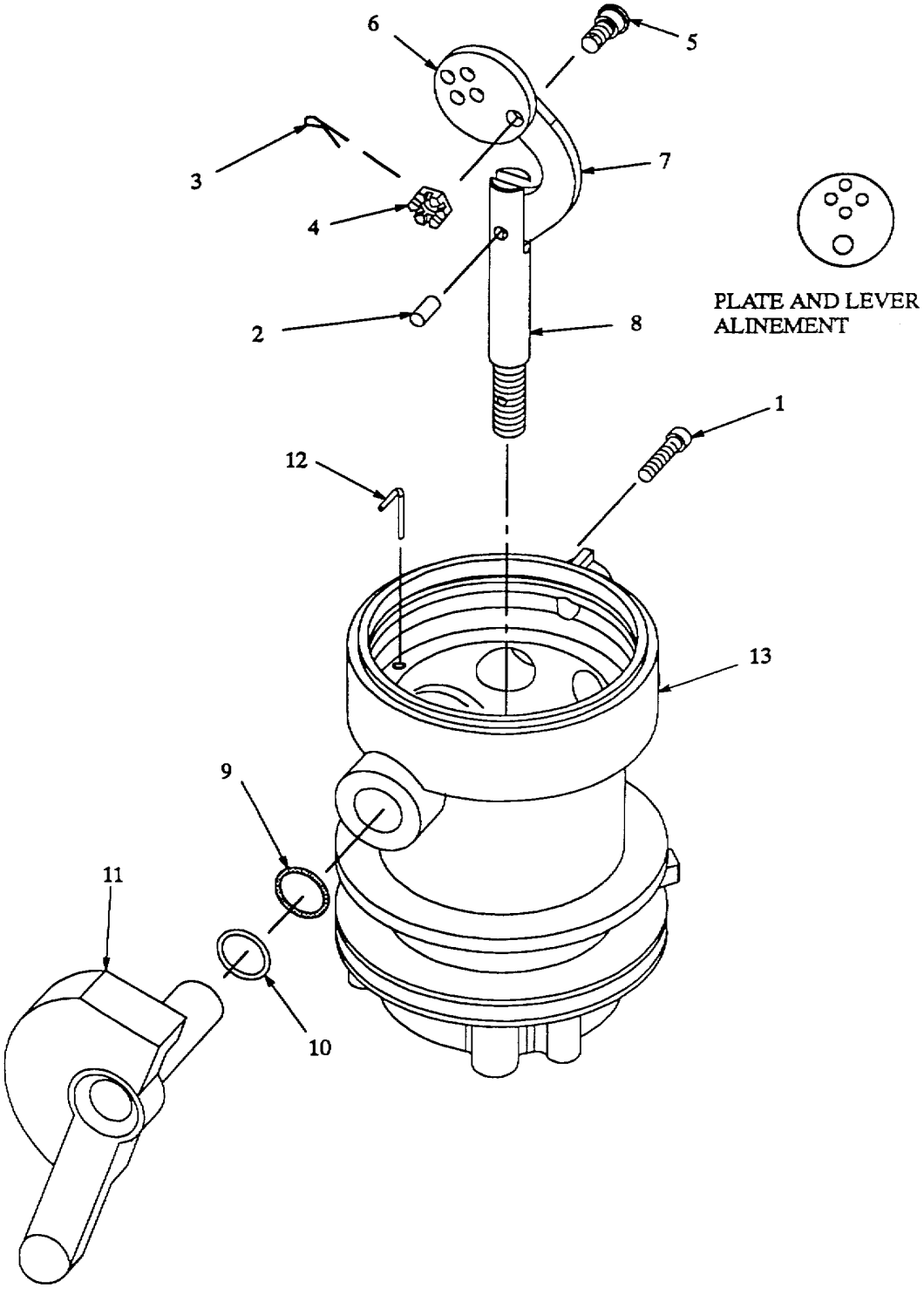

Figure 5-7. Control Linkage Disassembly.

5-3. RECIRCULATION NOZZLE ASSEMBLY REPAIR - cont.

(6) Inspect plate (6) and pin (5) for damaged threads.

(7) Inspect link (7) for cracks and elongated mounting holes.

e. Repair**.** Replace damaged parts and all sealing components. Replace all mandatory replacement items.

f. Assembly**.**

(1) Push straight leg of ground clip (12, figure 5-7) into body (13). Make sure exposed portion of clip is pressed down tight and points towards outside of body (not inward).

(2) Position link (7) on shoulder of pin (5). Make sure bend in link is positioned as shown.

NOTE

Threaded hole in plate is chamfered (beveled) on one side. Pin must be install in chamfered side of hole. Installing screw on wrong side of plate will prevent pin from tightening all the way down.

(3) Screw pin (5) and attached link (7) onto plate (6) .

(4) Install nut (4) on pin (5). Torque nut to 80-125 inch pounds while alining cotter pin hole.

(5) Install cotter pin (3) through nut (4) and pin (5).

(6) Aline link (7) with shaft (8) and install dowel pin (2). Make sure plate (6), link (7) and shaft are assembled in the position shown.

(7) Lower shaft (8) and attached parts into bore guide of body (13). Make sure shaft goes down far enough so that dowel pin (2) is secured by bore guide.

(8) Lubricate preformed packing (9) with silicone compound.

(9) Install backup ring (10) and preformed packing (9) on lever (11). Make sure backup ring is installed first. Install lever and attached parts in body (13).

CAUTION

Correct alinement of plate and lever is critical to proper operation of the nozzle. Aline plate and lever before installing socket head screws.

(10) Position lever (11) so that handle is pointing straight down (OPEN position). When viewed from inside the body (13), the four screw holes must be at the top of the shaft as shown.

(11) Aline plate (6) with bolt hole pattern on end of lever (11). Pin (5), will be at bottom of screws holes when plate is correctly installed.

5-3. RECIRCULATION NOZZLE ASSEMBLY REPAIR - cont.

(12) Working through plug hole in body (13), install four socket head screws (1) through plate (6) and into lever (11). Tighten screws securely.

CAUTION

Do not apply more than 1-1/2 wraps of anti-seize tape to plug threads. Excessive tape may cause body to crack during plug installation.

(13) Apply anti-seize tape to threads of plug (11, figure 5-6).

(14) Install plug (11) in body (12).

(15) Lubricate preformed packing (10) with silicone compound, then install packing in body (12).

(16) Install three index pins (7) in body (12).

CAUTION

Lock pins must be installed with flat surfaces facing out from body. Installing lock pins in the wrong direction will cause body to lock onto collar, preventing nozzle operation.

(17) Install springs (9) and lock pins (8) in body (12).

(18) Install plate (5) and snap ring (4) on seal (6).

(19) Aline plate (5) with with lock pins (8) and index pins (7), then press seal (6) and attached parts onto body (12). Make sure seal is fully seated on body.

(20) Rotate lever (11, figure 5-7) to OPEN position.

(21) Screw poppet (2, figure 5-6) onto shaft (3) until slots in poppet aline with cotter pin hole in shaft.

(22) Rotate lever (11, figure 5-7) to CLOSE position.

(23) Place a straight edge (rule) across top of seal (6, figure 5-6) and measure gap between edge of rule and top of poppet (2). Gap should be 0.070 to 0.110 inch.

NOTE

Gap between straight edge and poppet will change 0.020 inch for every 1/4 turn of poppet.

(24) If gap is too small, rotate lever (11, figure 5-7) to OPEN and turn poppet (2, figure 5-6) 1/4 turn to the right. If gap is too large, rotate lever (11) to OPEN and turn poppet (2) 1/4 turn to the left.

5-3. RECIRCULATION NOZZLE ASSEMBLY REPAIR - cont.

(25) Repeat steps (22, 23 and 24) until gap is within tolerance.

CAUTION

Ends of cotter pin must be bent around slotted portion of poppet to prevent jamming of shaft in body guide bore.

(26) Install cotter pin (1, figure 5-6) through poppet (2) and into shaft (3). Make sure ends of cotter pin are bent around slots in poppet.

(27) Set lever (8, figure 5-5) to CLOSE position.

WARNING

To prevent injury to personnel, wear protective gloves when installing bumper. Bumper must be softened in hot water and installed while still hot. Failure to wear protective gloves could result in serious burns.

(28) If removed, soak new bumper (4) in hot water (160-180°F) until soft. While still soft and pliable, press bumper onto collar (5).

(29) Position body (9) on collar (5).

(30) While holding collar (5), aline index lug (7) on body (9) with groove (6) in collar. Push body down into collar, then turn body to the right until body and collar engage.

(31) Lubricate preformed packing (2) with silicone compound and install on screw (1).

(32) Position collar (5) so that opening for balls (3) is pointing up.

NOTE

Do not lubricate balls with any type of oil, grease or compound. Lubricants will make ball installation difficult.

(33) Install 49 balls (3) in collar (5). Turn body (9) back and forth on collar (5) to aid installation of balls.

(34) Install preformed packing (2) and screw (1) in collar (5).

5-3. RECIRCULATION NOZZLE ASSEMBLY REPAIR - cont.

f. Testing.

NOTE

The D1 Nozzle must be fully assembled to perform both functional and leakage tests. Refer to para 4-13 to assemble components of the nozzle.

(1) Functional Test. Refer to figure 5-8.

NOTE

The flat portion of lever should be beneath the flat portion of ramp on nozzle collar. This is the closed position and the handle should not turn.

(a) Attempt to move lever (1) to the OPEN position. Lever must not move to OPEN position.

(b) Connect nozzle (2) to test adapter (3) (para 2-12b).

(c) Rotate lever (1) to the OPEN position until it passes over center and stops against the internal stop.

(d) Grab handles (4) and attempt to remove nozzle (2 from adapter 33). Nozzle should not disconnect.

(e) Position lever (1) to CLOSE, then OPEN position. Repeat a minimum of five times. Lever should be not bind or require excessive force to operate and must lock over center in the CLOSED position.

(f) Position lever (1) to CLOSED position, and disconnect nozzle (2) from adapter 13) (para 2-12b).

5-4. RECIRCULATION NOZZLE ASSEMBLY REPAIR - cont.

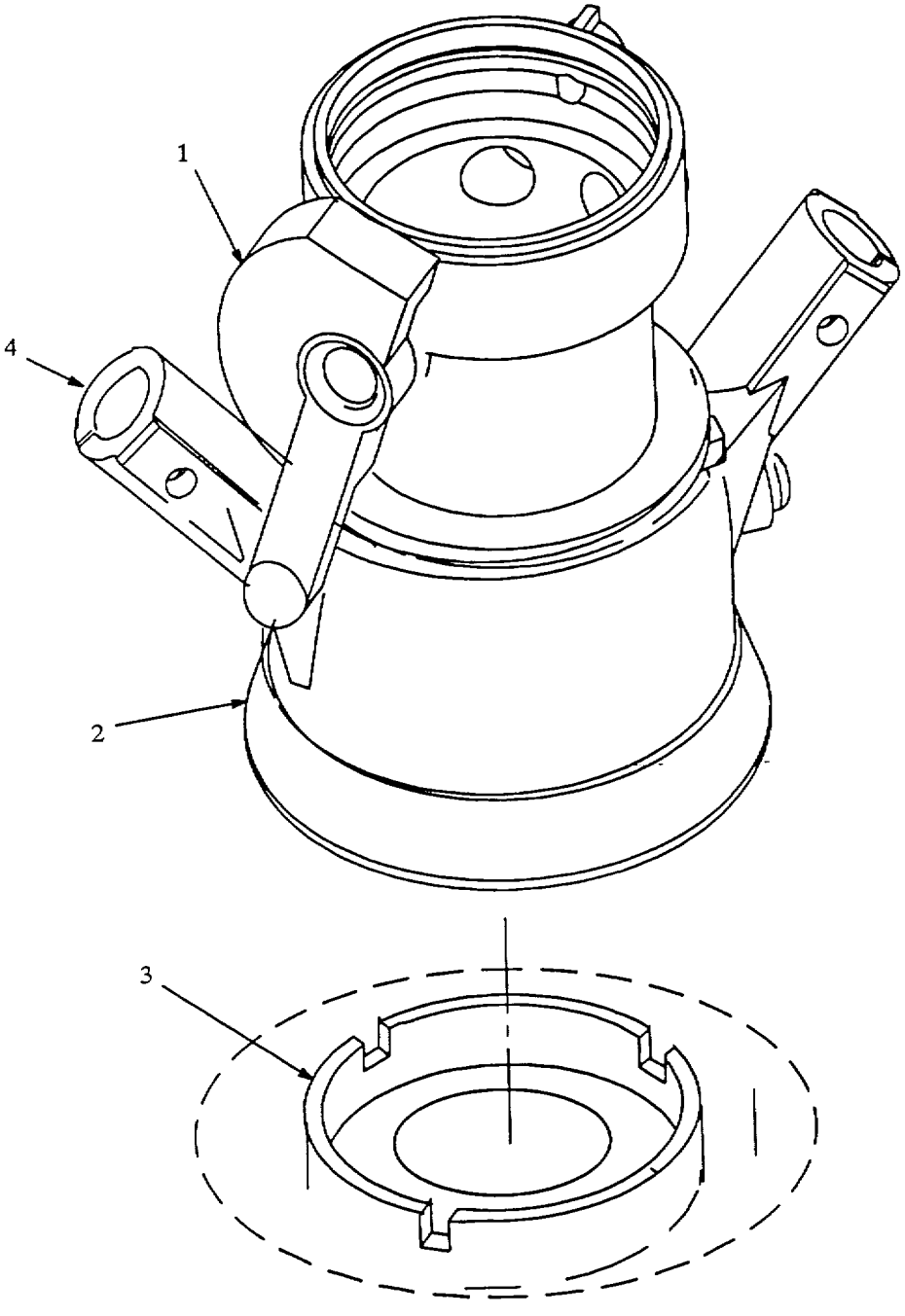

Figure 5-8. Recirculation Nozzle Functional Test.

5-3. RECIRCULATION NOZZLE ASSEMBLY REPAIR - cont.

(2) Leakage Test.

WARNING

System is under high pressure. Injury to personnel could result from ruptured line/fitting or faulty component. Always wear eye protection. Never exceed test pressure.

(a) Connect CCR nozzle to HEMTT tanker fuel hose.

(b) Connect recirulation nozzle to CCR nozzle.

(c) Connect recirulation nozzle to recirculation adapter on HEMTT tanker.

NOTE

Be sure to bleed trapped air from CCR and recirulation nozzles and hoses before applying pressure. Errors in pressure indications may result from trapped air.

(d) Operate HEMTT tanker and adjust pressure to 5 psig (refer to TM 9-2320-279-10-1). Maintain pressure for one minute.

(e) Repeat test at 60psig and 120psig. There should be no evidence of external leakage from nozzle during any portion of test.

(f) Adjust HEMTT tanker pressure to 0 psig (refer to TM 9-2320-279-10-1).

(g) Disconnect recirulation nozzle from recirculation adapter on HEMTT tanker.

(h) Operate HEMTT tanker and adjust to 5 psig (refer to TM 9-2320-279-10-1). Maintain pressure for one minute.

(i) Repeat test at 60 and 120 psig. There should be no evidence of external leakage from D1 nozzle during any portion of test.

(j) Shut down HEMTT tanker (refer to TM 9-2320-279-10-1)

(k) Disconnect recirculation nozzle from CCR nozzle.

(l) Disconnect CCR nozzle from HEMTT tanker fuel hose.

APPENDIX A

REFERENCES

A-1. SCOPE.

This appendix lists all forms, field manuals, technical manuals, and miscellaneous publications referenced in this manual. Also listed are publications that should be consulted for additional information.

A-2. FORMS.

Recommended Changes to Publications and Blank Forms .....DA Form 2028
Recommended Changes to Equipment Technical Publications .....DA Form 2028-2
Equipment Inspection and Maintenance Worksheet .....DA Form 2404
Maintenance Request .....DA Form 5504
Equipment Log Assembly (Records) .....DA Form 2408-9
Quality Deficiency Report .....SF 368
Report of Discrepancy.....SF364

A-3. FIELD MANUALS.

NBC Contamination Avoidance.....FM 3-3
NBC Protection.....FM 3-4
NBC Decontamination.....FM 3-5
NBC Decontamination.....FM 3-5
Organizational Maintenance of Military Petroleum
Pipelines, Tanks and Related Equipment .....FM 10-20
Aircraft Refueling .....FM 10-68
Petroleum Supply Point Equipment and Operations .....FM 10-69
Rigging, Loading and Dropping Procedures .....FM 10-564
First Aid for Soldiers.....FM 21-11
Basic Cold Weather Manual .....FM 31-70
Northern Operations.....FM 31-71
Inspecting and Testing Petroleum Products .....FM 10-70

A-4. TECHNICAL MANUALS.

Destruction of Army Materiel to Prevent Enemy Use.....TM 750-244-3
Operator's, Unit, and Direct Support Maintenance Manual Including
Repair Parts and Special Tools List for Closed-Circuit Refueling Nozzle
Assembly, Model 64017B .....TM 10-4930-248-13&P
Operating Instructions for Heavy Expanded Mobility Tactical
Truck (HEMTT) .....TM 9-2320-279-10-1

A-5. MISCELLANEOUS.

The Army Maintenance Management System.....DA PAM 738-750
Security Procedures.....AR 190-11, AR 190-13
Packing of Army Material for Shipment and Storage.....AR 746-1
Implementing Correct Procedures for Containing, Cleaning and Disposing
of Spilled Petroleum Products.....AR200-1

APPENDIX B
MAINTENANCE ALLOCATION CHART

Section I. INTRODUCTION

B-1. GENERAL.

a. This section provides a general explanation of all maintenance and repair function authorized at various maintenance categories.

b. The Maintenance Allocation Chart (MAC) in Section II designates overall authority and responsibility for performance of maintenance functions on the identified end item or component. The application of the maintenance functions to the end item or component will be consistent with the capacities and capabilities of the designated maintenance categories.

c. Section III lists the tools and test equipment (both special tools and common tool sets) required for each maintenance function as referenced from Section II.

d. Section IV contains supplemental instructions and explanatory notes for a particular maintenance function.

B-2. MAINTENANCE FUNCTIONS.

Maintenance functions will be limited to and are defined as follows:

a. Inspect. To determine the serviceability of an item by comparing its physical, mechanical, and or electrical characteristics with established standards through examination (e.g., by sight, sound, or feel).

b. Test. To verify serviceability by measuring the mechanical, pneumatic, hydraulic, or electrical characteristics of an item and comparing those characteristics with prescribed standards.

c. Service. Operations required periodically to keep an item in proper operating condition, i.e., to clean (includes decontaminate, when required), to preserve, to drain, to paint, or to replenish fuel, lubricants, chemical fluids, or gases.

d. Adjust. To maintain or regulate, within prescribed limits, by bringing into proper or exact position, or by setting the operating characteristics to specified parameters.

e. Aline. To adjust specified variable elements of an item to bring about optimum performance.

f. Calibrate. To determine and cause corrections to be made or to be adjusted on instruments or test, measuring, and diagnostic equipments used in precision measurement. Consists of comparisons of two instruments, one of which is a certified standard of known accuracy, to detect and adjust any discrepancy in the accuracy of the instrument being compared.

B-2. MAINTENANCE FUNCTIONS- cont

g. Remove/Install. To remove and install the same item when required to perform service or other maintenance functions. Install may be the act of emplacing, seating, or fixing into position a spare, repair part, or module (component or assembly) in a manner to allow the proper functioning of an equipment or system.

h. Replace. To remove an unserviceable item and install a serviceable counterpart in its place. "Replace" is authorized by the MAC and is shown as the 3rd position code of the SMR code.

i. Repair. The application of maintenance services, including fault location/'troubleshooting, removal/installation, and disassembly/assembly procedures, and maintenance actions to identify troubles, and restore serviceability to an item by correcting specific damage, fault, malfunction, or failure in a part, subassembly, module (component or assembly) end item, or system.

j. Overhaul. That maintenance effort (service/action) prescribed to restore an item to a completely serviceable/operational condition as required by maintenance standards in appropriate technical publications (i.e., DMWR). Overhaul is normally the highest degree of maintenance performed by the Army. Overhaul does not normally return an item to like new condition.

k. Rebuild. Consists of those services/actions necessary for the restoration of unserviceable equipment to a like new condition in accordance with original manufacturing standards. Rebuild is the highest degree of material maintenance applied to Army equipment. The rebuild operation includes the act of returning to zero those age measurements (hours/miles, etc.) considered in classifying Army equipment/components.

B-3. EXPLANATION OF COLUMNS IN THE MAC - SECTION II.

a. Column 1, Group Number. Column 1 lists functional group code numbers, the purpose of which is to identify maintenance significant components, assemblies, subassemblies, and modules with the next higher assembly. End item group numbers are "00".

b. Column 2, Component/Assemblv. Column 2 contains the names of components, assemblies, subassemblies, and modules for which maintenance is authorized.

c. Column 3, Maintenance Function. Column 3 lists the functions to be performed on the item listed in Column 2. (For a detailed explanation of these functions, see paragraph B-2).

d. Column 4, Maintenance Level. Column 4 specifies, by the listing of a work time figure (expressed as man-hours shown as whole hours or decimals) in the appropriate subcolumn(s), the level of maintenance authorized to perform the function listed in Column 3). This figure represents the active time required to perform that maintenance function at the indicated level of maintenance. If the number or the complexity of the tasks within the listed maintenance function vary at different maintenance levels, appropriate work time figures will be shown for each level. The work time figure represents the average time required to restore an item (assembly, subassembly, component, module, end item, or system) to a serviceable condition under typical field operating conditions. This time includes preparation item including any necessary disassembly/assembly time), troubleshooting/fault location time, and quality assurance/quality control time in addition to the time required to perform the specific tasks

identified for the maintenance functions authorized in the maintenance allocation chart. The system designations for the various maintenance levels are shown on the following page.

C .....Operator or crew
O .....Unit Maintenance
F.....Direct Support Maintenance
H .....General Support Maintenance
D .....Depot Maintenance

e. Column 5, Tools and Equipment. Column 5 specifies, by code, those common tool sets (not individual tools) common TMDE, and special tools, special TMDE, and support equipment required to perform the designated function.

f. Column 6, Remarks. This column, when applicable, contains a letter code, in alphabetic order, which is keyed to the remarks contained in Section IV.

B-4. EXPLANATION OF COLUMNS IN TOOL AND TEST EQUIPMENT REQUIREMENTS, SECTION III.

a. Column 1, Reference Code. The tool and test equipment reference code correlates with a code used in the MAC, Section II, Column 5.

b. Column 2, Maintenance Level. The lowest category of maintenance authorized to use the tool or test equipment.

c. Column 3, Nomenclature. Name or identification of the tool or test equipment.

d. Column 4, National Stock Number. The national stock number of the tool or test equipment.

e. Column 5, Tool Number. The manufacturer's part number.

B-5. EXPLANATION OF COLUMNS IN REMARKS, SECTION IV.

a. Column 1, Reference Code. The code recorded in column 6, Section II.

b. Column 2, Remarks. This column lists information pertinent to the maintenance function being performed as indicated in the MAC, Section II.

Section II. MAINTENANCE ALLOCATION CHART

(1) GROUP NUMBER	(2) COMPONENT/ASSEMBLY	(3) MAINTENANCE FUNCTION	(4) MAINTENANCE LEVEL					(5) TOOLS & EQUIP	(6) REMARKS
			UNIT		DS	GS	DEPOT		
			C	O	F	H	D		
00	HEMTT TANKER AIRCRAFT REFUELING SYSTEM								
01	Closed Circuit Refueling (CCR) Nozzles								A
02	Single Point Refueling Nozzle (Type D1)	Inspect	0.1						
		Replace	0.2						
		Test			0.5			1, 2, 3, 5	
		Repair		1.5	3.5				
0201	Non-Valved Dry Break Coupling	Inspect	0.1						
		Replace		0.5					
		Repair		1.0				1	
03	Recirculation Nozzle Assembly	Inspect	0.1						
		Replace	0.2						
		Test			0.5			1, 2, 3, 5	
		Repair		1.5	3.5				
04	**DELETED**								
05	Hose Assembly, 2 in. x 50 ft.	Inspect	0.1						
		Replace	0.2						
		Repair		1.0				1, 2, 4	
0501	Valved Dry Break Coupling	Inspect	0.1						
		Replace		0.5					
		Repair		1.0				1	
06	Elbow Assembly	Inspect	0.1						
		Replace	0.2						
		Repair		0.5				1, 2	
0601	Non-Valved Dry Break Coupling	Inspect	0.1						
		Replace		0.5					
		Repair		1.0				1	
07	Tee Assembly	Inspect	0.1						
		Replace	0.2						
		Repair		0.5				1,2	

(1) GROUP NUMBER	(2) COMPONENT/ASSEMBLY	(3) MAINTENANCE FUNCTION	(4) MAINTENANCE LEVEL					(5) TOOLS & EQUIP	(6) REMARKS
			UNIT		DS	GS	DEPOT		
			C	O	F	H	D		
0701	Valved Dry Break Coupling	Inspect	0.1						
		Replace		0.5					
		Repair		1.0				1	
08	Hose Assembly, 3 in. x 50 ft.	Inspect	0.1						
		Replace	0.2						
		Repair		1.0				1, 2, 4	
0801	Valved Dry Break Coupling	Inspect	0.1						
		Replace		0.5					
		Repair		1.0				1	
0802	Ball Valve Assembly	Inspect	0.1						
		Replace		0.5					
		Repair		1.0				1, 2	
09	Adapters	Inspect	0.1						
		Replace	0.2						
		Repair		1.0				1, 2	

Section III. TOOLS AND TEST EQUIPMENT REQUIREMENTS

(1) REFERENCE CODE	(2) MAINTENANCE CATEGORY	(3) NOMENCLATURE	(4) NATIONAL STOCK NUMBER (NSN)	(5) TOOL NUMBER
1	O	Tool Kit, General Mechanics	5180-00-177-7033	SC 5180-90-CL-N26
2	O	Shop Set, Automotive Vehicle	4910-00-754-0654	SC-4910-95-CL-A74
3	F	Adapter, Pressure	1560-00-827-7629	MS24484-1
4	O	Clamping Tool	5120-00-278-9925	GGG-C-00413
5	F	Shop Equipment, Electrical Repair	4910-00-294-9517	SC 4940-95-CL-B05

Section IV. REMARKS

REFERENCE CODE	REMARKS
A	Refer to TM10-4930-248-13&P.

APPENDIX C

REPAIR PARTS AND SPECIAL TOOLS LIST

SECTION I. INTRODUCTION

C-1. SCOPE.

This RPSTL lists and authorizes spares and repair parts; special tools; special test, measurement, and diagnostic equipment (TMDE); and other special support equipment required for performance of unit and direct support maintenance of the HEMTT Tanker Aircraft Refueling System (HTARS), Model HTARS100, NSN 4930-01-365-7771 and Model HTARS101, NSN: 4930-01-435-9019. It authorizes the requisitioning, issue, and disposition of spares, repair parts and special tools as indicated by the source, maintenance and recoverability (SMR) codes.

C-2. GENERAL.

In addition to this section, Introduction, this Repair Parts and Special Tools List is divided into the following sections:

a. Section II. Repair Parts List. A list of spares and repair parts authorized by this RPSTL for use in the performance of maintenance. This list also includes parts which must be removed for replacement of the authorized parts. Parts lists are composed of functional groups in ascending alphanumeric sequence, with the parts in each group listed in ascending figure and item number sequence. Bulk materials are listed in item name sequence. Items listed are shown on the associated Illustration(s)/(figure(s).

b. Section III. Special Tools List. A list of special tools, special TMDE, and other special support equipment authorized by this RPSTL (as indicated by Basic of Issue (BOI) information in DESCRIPTION AND USABLE ON CODE column) for the performance of maintenance.

c. Section IV. Cross-references Indexes. A list, in National Item Identification Number (NIIN) sequence, of all National stock numbered items appearing in the listing, followed by a list in alphanumeric sequence of all part numbers appearing in the listings. National stock numbers and part numbers are cross-referenced to each illustration figure and item number appearance. The figure and item number index lists figure and item number in alphanumeric sequence and cross-references NSN, CAGEC and part number.

C-3. EXPLANATION OF COLUMNS (SECTIONS II AND III).

a. Item No. (Column (1)). Indicates the number used to identify items called out in the illustration.

b. SMR Code (Column (2)). The Source, Maintenance, and Recoverability (SMR) code is a 5-position code containing supply/requisitioning information, maintenance category authorization criteria, and disposition instruction, as shown in the following breakout:

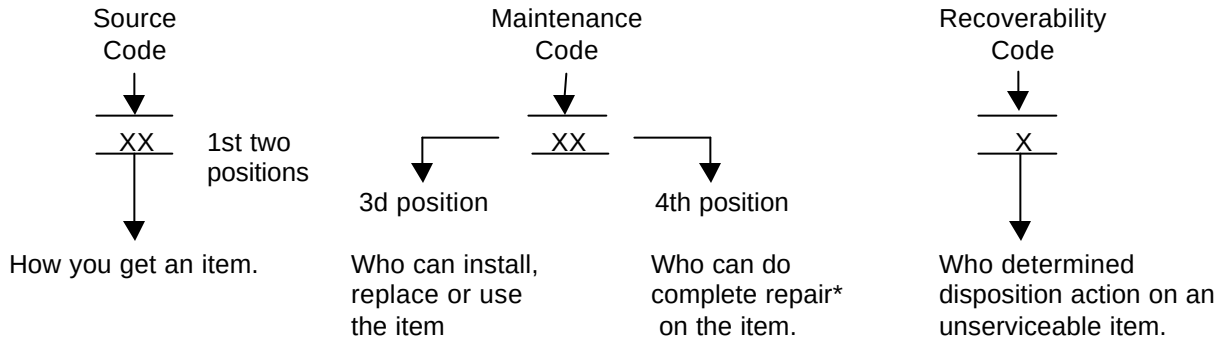

*Complete Repair: Maintenance capacity, capability, and authority to perform all corrective maintenance tasks of the "Repair" function in a use/user environment in order to restore serviceability to a failed item.

(1) Source Code. The source code tells you how to get an item needed for maintenance, repair, or overhaul of an end item/equipment. Explanations of source codes follows:

Source Code	Explanation
PA PB PC** PD PE PF PG	Stocked items; use the applicable NSN to request/requisition items with these source codes. They are authorized to the category indicated by the code entered in the 3rd position of the SMR code. ****NOTE: Items coded PC are subject to deterioration.**
KD KF KB	Items with these codes are not to be requested/requisitioned individually. They are part of a kit which is authorized to the maintenance category indicated in the 3rd position of the SMR code. The complete kit must be requisitioned and applied.
MO - (Made at Unit/ AVUM Level) MF - (Made at DS/AVIM Level) MH - (Made at GS Level) ML - (Made at Specialized Repair Activity (SRA)) MD - (Made at Depot)	Items with these codes are not to be requested/requisitioned individually. They must be made from bulk material which is identified by the part number in the DESCRIPTION and USABLE ON CODE (UOC) column and listed in the Bulk Material group of the repair parts listed in the RPSTL. If the item is authorized to you by the 3rd position code of the SMR code, but the source code indicates it is made at a higher level, order the item from the higher level of maintenance.

AO - (Assembled by Unit/ AVUM Level)
AF - (Assembled by DS/AVIM Level)
AH - (Assembled at GS Category)
AL - (Assembled by SRA)
AD - (Assembled by Depot)

Items with these codes are not to be requested/requisitioned individually. The parts that make up the assembled item must be requisitioned or fabricated and assembled at the level of maintenance indicated by the source code. If the 3rd position code of the SMR code authorizes you to replace the item, but the source code indicates the items are assembled at a higher level, order the item from the higher level of maintenance.

XA - Do not requisition an "XA"-coded item. Order its next higher assembly. (Also, refer to the **NOTE** below.)

XB - If an "XB" item is not available from salvage, order it using the CAGEC and part number given.

XC - Installation drawing, diagram, instruction sheet, field service drawing, that is identified by manufacturer's part number.

XD - Item is not stocked. Order an "XD"-coded item through normal supply channels using the CAGEC and part number given, if no NSN is available.

NOTE

Cannibalization or controlled exchange, when authorized, may be used as a source of supply for items with the above source codes, except for those source coded "XA" or those aircraft support items restricted by requirements of AR 750-1.

(2) Maintenance Code.. Maintenance codes tell you the level(s)! of the maintenance authorized to USE and REPAIR support items. The maintenance codes are entered in the third and fourth positions of the SMR code as follows:

(a) The maintenance code entered in the third position tells you the lowest maintenance level authorized to remove, replace, and use an item. The maintenance code entered in the third position will indicate authorization to one of the following levels of maintenance.

Maintenance Code	Application/Explanation
C	Crew or operator maintenance done within unit/AVUM maintenance.
O	Unit level/AVUM can remove, replace, and use the item.
F	Direct support/AVIM maintenance can remove, replace, and use the item.
H	General support level can remove, replace, and use the item.
L	Specialized repair activity can remove, replace, and use the item.
D	Depot level can remove, replace, and use the item.

(b) The maintenance code entered in the fourth position tells whether or not the item is to be repaired and identifies the lowest maintenance level with the capability to do complete repair (i. e., perform all authorized repair functions).

NOTE:
Some limited repair may be done on the item at a lower level of maintenance, if authorized by the Maintenance Allocation Chart and SMR codes.

Maintenance Code		Application/Explanation
O	-	Unit/AVUM is the lowest level that can do complete repair of the item.
F	-	Direct support/AVIM is the lowest level that can do complete repair of the item.
H	-	General support is the lowest level that can do complete repair of the item.
L	-	Specialized repair activity is the lowest level that can do complete repair of the item.
D	-	Depot is the lowest level that can do complete repair of the item.
Z	-	Nonrepairable. No repair is authorized.
B	-	No repair is authorized. No parts or special tools are authorized for the maintenance of a "B" coded item. However, the item may be reconditioned by adjusting, lubricating, etc., at the user level.

(3) Recoverability Code. Recoverability codes are assigned to items to indicate the disposition action on unserviceable items. The recoverability code is entered in the fifth position of the SMR Code as follows:

Recoverability Code		Application/Explanation
Z	-	Nonrepairable item. When unserviceable, condemn and dispose of the item at the level of maintenance shown in 3rd position of SMR Code.
O	-	Reparable item. When not economically reparable, condemn and dispose of the item at unit or AVUM level.
F	-	Reparable item. When uneconomically reparable, condemn and dispose of the item at the direct support or AVIM level.
H	-	Reparable item. When uneconomically reparable, condemn and dispose of the item at the general support level.
D	-	Reparable item. When beyond lower level repair capability, return to depot. Condemnation and disposal of item not authorized below depot level.
L	-	Reparable item. Condemnation and disposal not authorized below specialized repair activity (SRA).
A	-	Item requires special handling or condemnation procedures because of specific reasons (e.g., precious metal content, high dollar value, critical material, or hazardous material). Refer to appropriate manuals/directives for specific instructions.

c. CAGEC (Column (3)). The Commercial and Government Entity Code (CAGEC) is a 5-digit numeric code which is used to identify the manufacturer, distributor, or Government agency, etc., that supplies the item.

d. PART NUMBER (Column (4)). Indicates the primary number used by the manufacturer, (individual, company, firm, corporation, or Government activity), which controls the design and characteristics of the item by means of its engineering drawings, specification standards, and specification requirements to identify an item or range of items.

NOTE

When you use an NSN to requisition an item, the item you receive may have a different part number from the part ordered.

e. DESCRIPTION AND USABLE ON CODE (UOC) (Column(5)). This column includes the following information:

(1) The Federal item name and, when required, a minimum description to identify the item.

(2) Part number of bulk materials are reference in this column in the line entry to be manufactured/fabricated.

(3) The statement "END OF FIGURE" appears just below the last item description in Column (5) for a given figure in both Section II and Section III.

f. QTY Column (6)). The QTY (quantity per figure column) indicates the quantity of the item used in the breakout shown on the illustration figure, which is prepared for a functional group, subfunctional group, or an assembly. A "V" appearing in this column in lieu of a quantity indicates that the quantity is variable and may vary from application to application.

C-4. EXPLANATION OF COLUMNS (SECTION IV).

a. NATIONAL STOCK NUMBER (NSN) INDEX.

(1) STOCK NUMBER COLUMN. This column lists the NSN by national item identification number (NIIN) sequence. The NIIN consists of the last nine digits of the NSN, i.e.

NSN
4930-01-365-7771
NIIN

When using this column to locate an item, ignore the first four digits of the NSN. Use the complete NSN (13 digits) when requisitioning by stock number.

(2) FIG. Column. This column lists the number of the figure where the item is identified/located. The figures are in numerical order in Section II and Section III.

(3) ITEM Column. The item number identifies the item associated with the figure listed in the adjacent FIG. column. This item is also identified by the NSN listed on the same line.

b. PART NUMBER INDEX. Part numbers in this index are listed by part number in ascending alphanumeric sequence (i.e., vertical arrangement of letter and number combination which places the first letter or digit of each group in order A through Z, followed by the numbers 0 through 9 and each following letter or digit in like order).

(1) CAGEC Column. The Commercial and Government Entity Code (CAGEC) is a 5-digit numeric code used to identify the manufacturer, distributor, or Government agency/activity that supplies the item.

(2) PART NUMBER Column. Indicates the primary number used by the manufacturer (individual, firm, corporation, or Government activity), which controls the design and characteristics of the item by means of its engineering drawings, specifications standards, and inspection requirements to identify an item or range of items.

(3) STOCK NUMBER Column. This column lists the NSN for the associated part number and manufacturer identified in the PART NUMBER and CAGEC columns to the left.

(4) FIG. Column. This column lists the number of the figure where the item is identified/located in Section II and Section III.

(5) ITEM Column. This ITEM number is that number assigned to the item as it appears in the figure referenced in adjacent figure number column.

c. FIGURE AND ITEM NUMBER INDEX.

(1) Fig. Column. This lists the number of the figure where the item is identified/located in Section II and Section III.

(2) ITEM Column. This item number is that number assigned to the item as its appears in the figure referenced in the adjacent number column.

(3) STOCK NUMBER Column. This column lists the NSN for the item.

(4) CAGEC Column. The Commercial and Government Entity Code (CAGEC) is a 5-digit numeric code used to identify the manufacturer, distributor, or Government agency/activity that supplies the item.

(5) PART NUMBER Column. Indicates the primary number used by the manufacturer (individual, firm, corporation, or Government activity), which controls the design and characteristics of the item by means of its engineering drawings, specifications, standards, and inspection requirements to identify an item or range of items in Section II and Section III.

C-5. SPECIAL INFORMATION.

a. USABLE ON CODE. The usable on code appears in the lower left corner of the Description column heading. Usable on codes are shown as "UOC:.." in the Description Column (justified left) on the last line applicable item description/nomenclature. Uncoded items are applicable to all models. Identification of the usable on codes in this RPSTL are:

CODE	USED ON
FHG	HEMTT Tanker Aircraft Refueling System, Model HTARS100
FNV	HEMTT Tanker Aircraft Refueling System, Model HTARS101

b. FABRICATION INSTRUCTIONS. Bulks materials required to manufacture items are listed in the Bulk Material Functional Group of this RPSTL. Part number for bulk materials are also referenced in the description column of the line entry for the item to be manufactured/fabricated. Detailed fabrication instructions for items source coded are found in this manual.

c. INDEX NUMBERS. Items which have the BULK in the figure column will have an index number shown in the item number column. This index number is a cross-reference between the National Stock Number/Part Number Index and the bulk material list in Section II.

d. ASSOCIATED PUBLICATIONS. The publication(s) listed below pertains to the HEMTT Tanker Aircraft Refueling System (HTARS), Models HTARS100 and HTARS101 and their components:

Publication	Short Title
TM 10-4930-247-13&P	Operation and Maintenance of HEMTT Tanker Aircraft Refueling System with Repair Parts List

C-6. HOW TO LOCATE REPAIR PARTS.

a. When National Stock Number or Part Number is NOT Known.

(1) First. Using the table of contents, determine the assembly group for subassembly group to which the item belongs. This is necessary since figures are prepared for assembly groups and subassembly groups, and listing are divided into the same groups.

(2) Second. Find the figure covering the assembly group or subassembly group to which the item belongs.

(3) Third. Identify the item on the figure and use the figure and Item Number Index to find the NSN.

b. When National Stock Number or Part Number is Known.

(1) First. Using the National Stock Number and Part Number Indexes find the pertinent National Stock Number or Part Number. The NSN index is in National Item Identification Number (NIIN) sequence (see 4.a.). The part numbers in the Part Number index are listed in ascending alphanumeric sequence (see paragraph 4.b.). Both indexes cross-reference you to the illustration/figure and item number of the item you are looking for.

(2) Second. Turn to the figure and item number, verify that the item is the one you are looking for, then locate the item number in the parts list for the Figure

C-7. ABBREVIATIONS.

Abbreviations used in this manual are listed in MIL-STD-12.

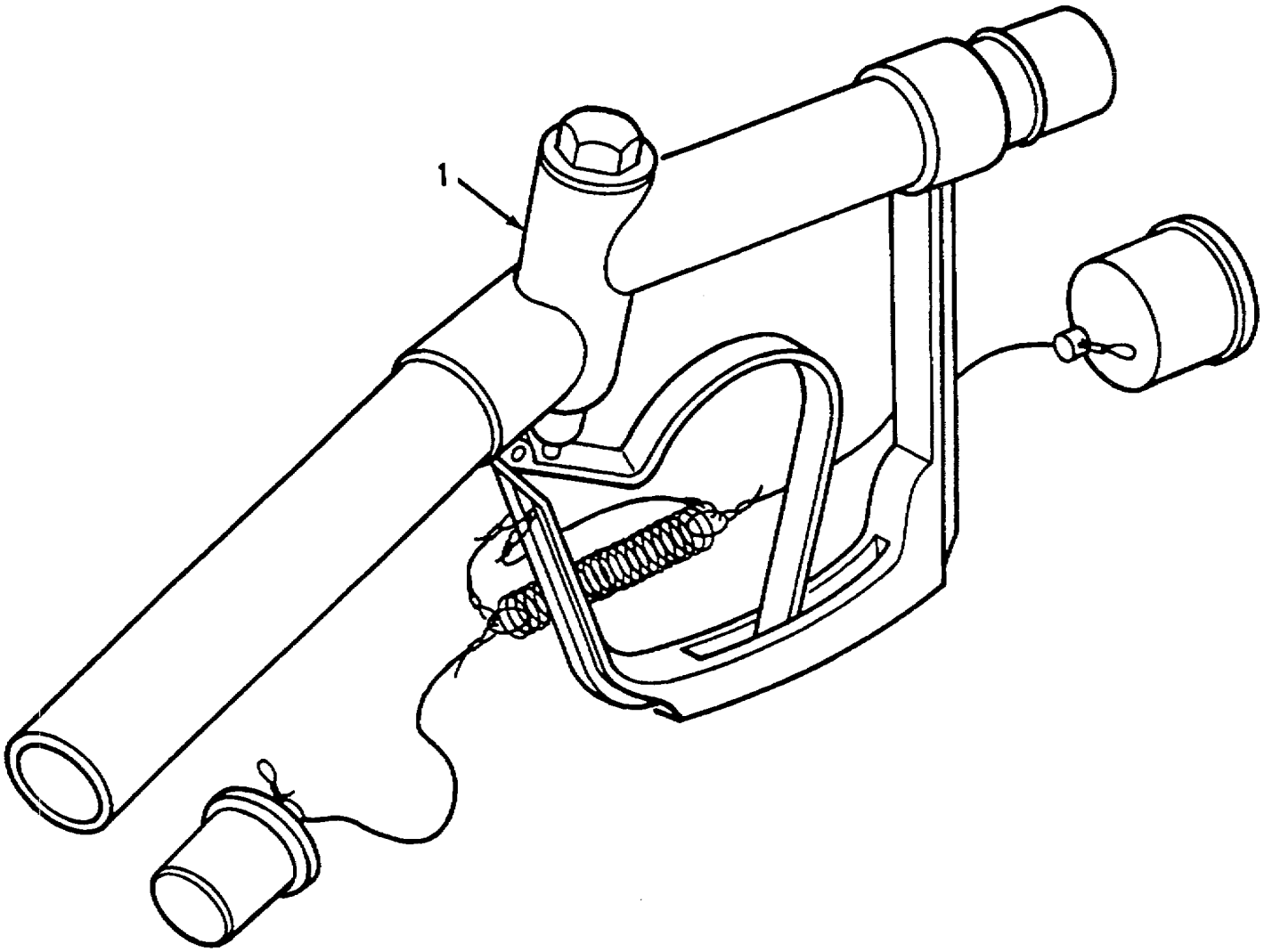

Figure C-1. Open Port Nozzle Assembly

(1) ITEM NO	(2) SMR CODE	(3) CAGEC	(4) PART NUMBER	(5) DESCRIPTION AND USABLE ON CODES (UOC)	(6) QTY
				GROUP 01 CLOSED CIRCUIT REFUELING (CCR) NOZZLES	
				FIG. C-1 OPEN PORT NOZZLE ASSEMBLY	
1	PAOZZ	0DT23	64014	NOZZLE, OPEN PORT	4

END OF FIGURE

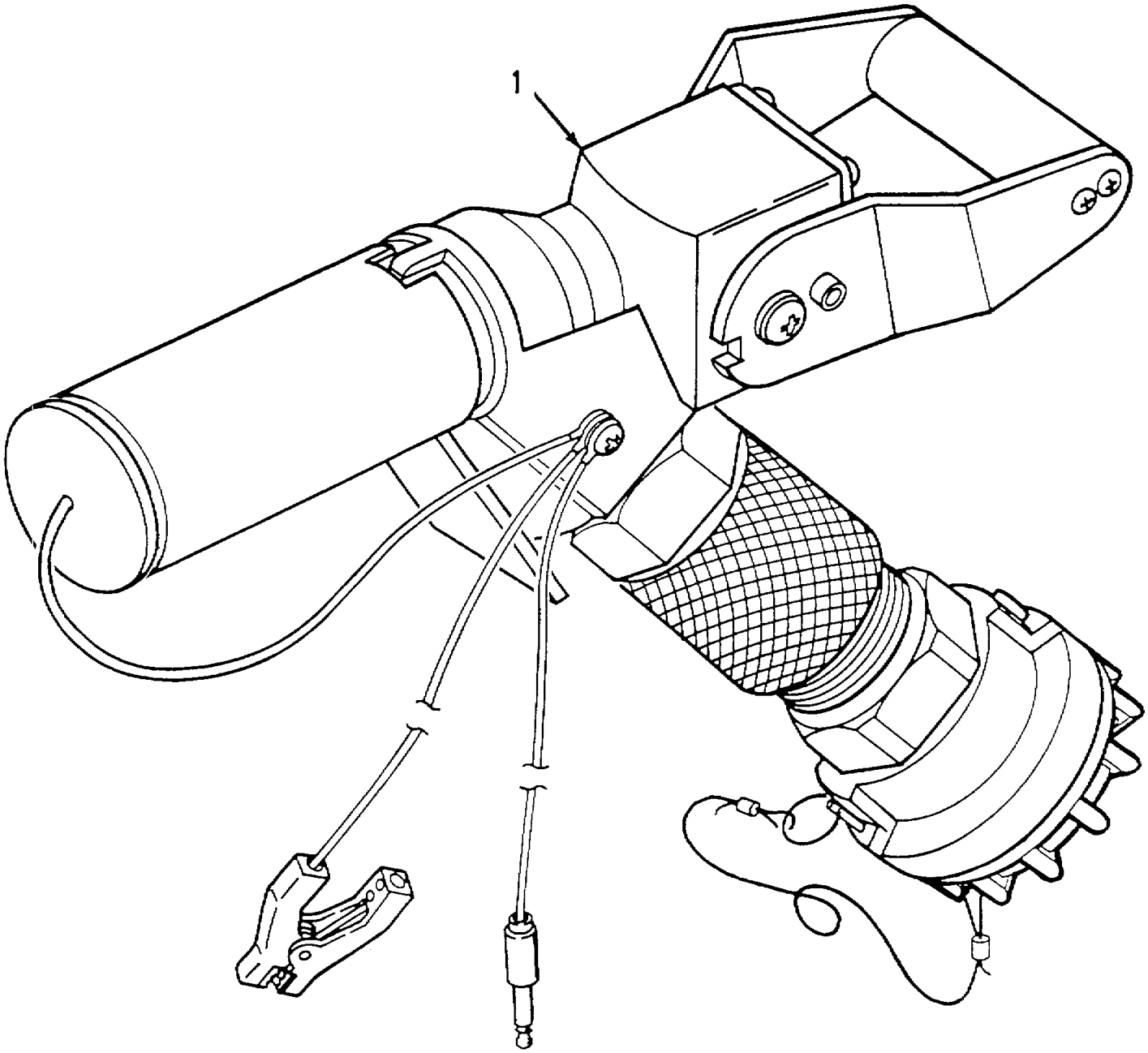

Figure C-2. Closed Circuit Refueling (CCR) Nozzle Assembly

(1) ITEM NO	(2) SMR CODE	(3) CAGEC	(4) PART NUMBER	(5) DESCRIPTION AND USABLE ON CODES (UOC)	(6) QTY
				GROUP 01 CLOSED CIRCUIT REFUELING (CCR) NOZZLES	
				FIG. C-2 CLOSED CIRCUIT REFUELING (CCR) NOZZLE ASSEMBLY	
1	PEOFF	0DT23	64017B	NOZZLE ASSY, CCR SEE APPLICABLE TM10-4930-248-13SP.....	4

END OF FIGURE

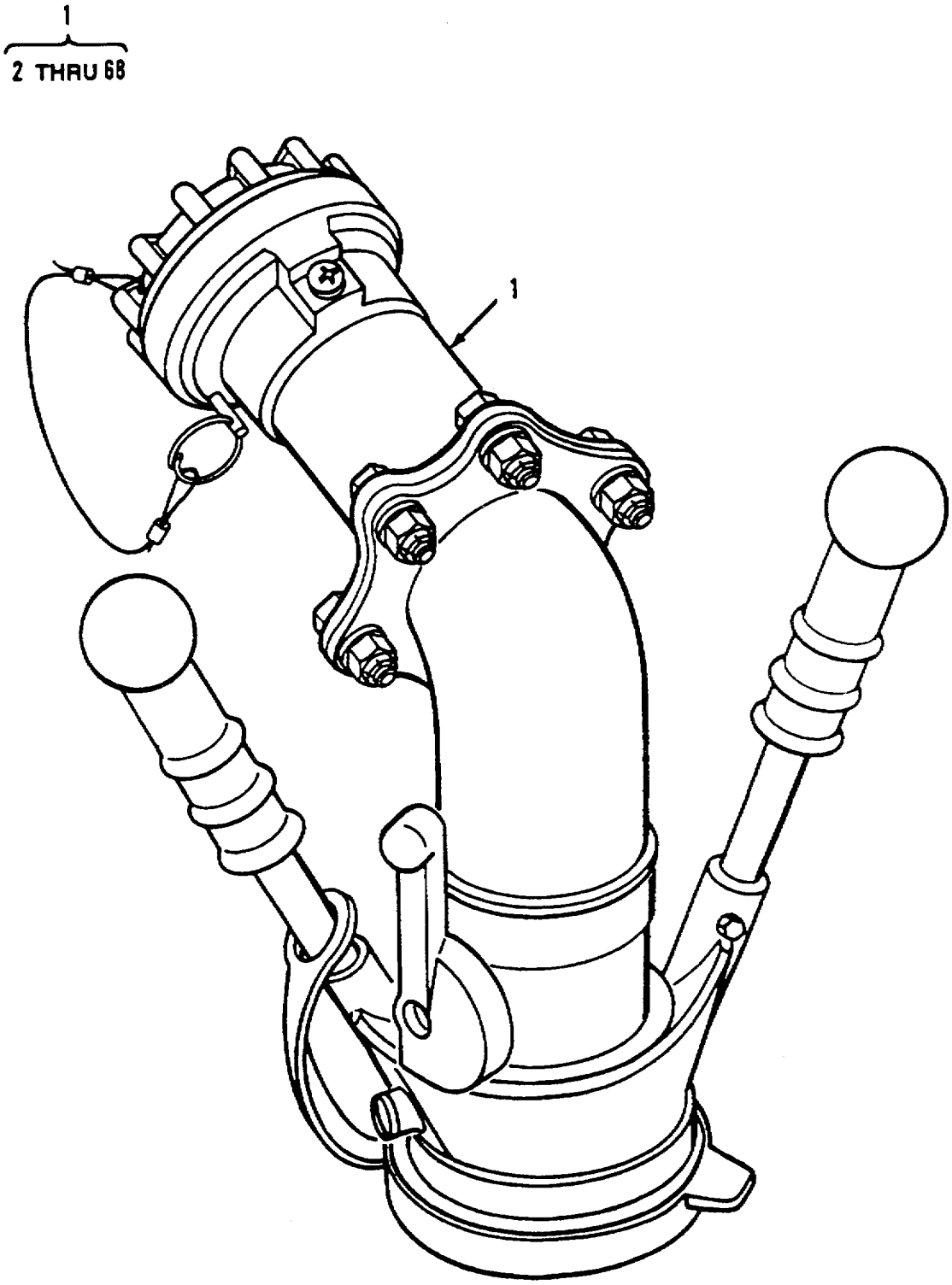

Figure C-3. Pressure Fueling Nozzle Assembly (HTARS100) (Sheet 1 of 4)

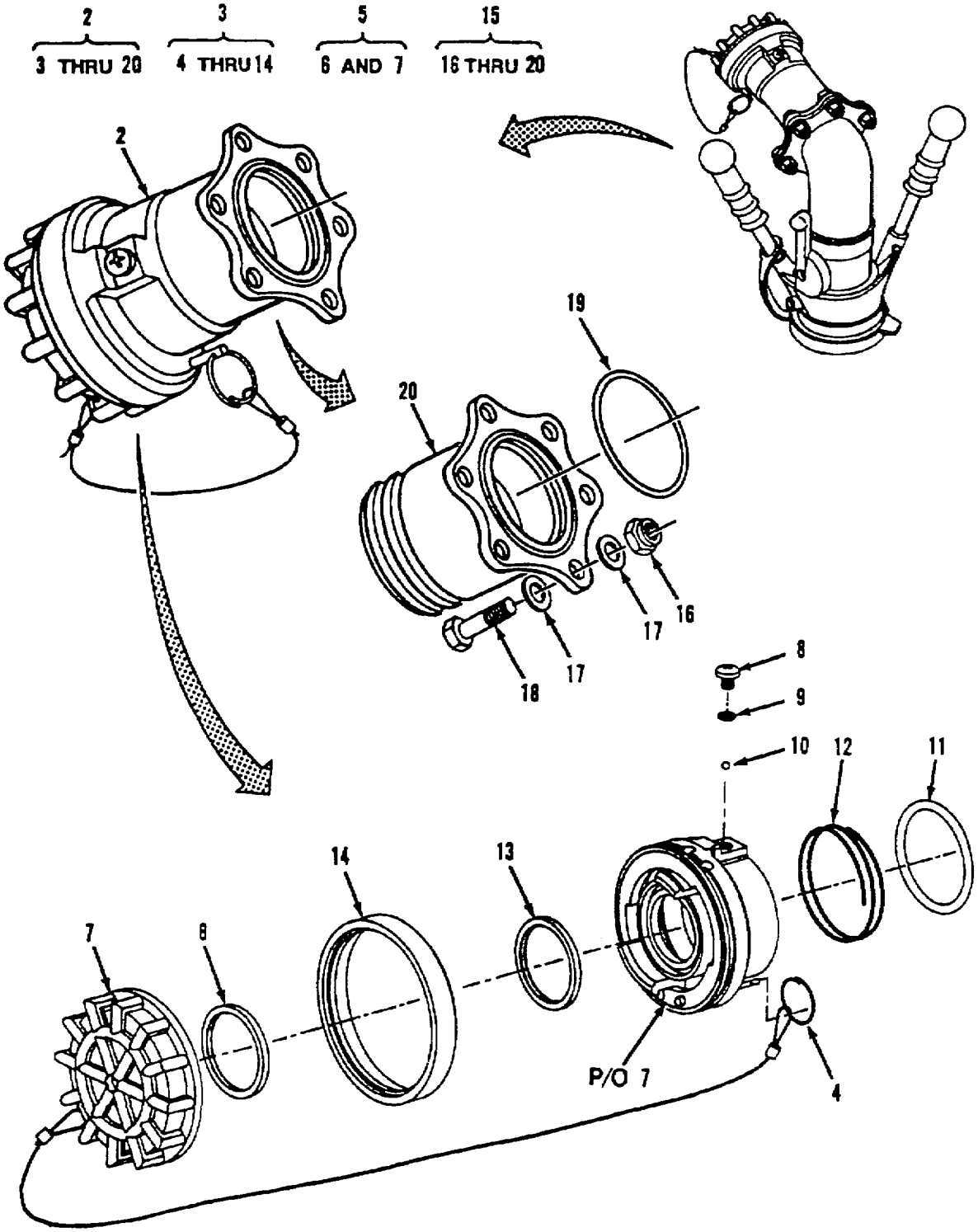

Figure C-3. Pressure Fueling Nozzle Assembly (HTARS100) (Sheet 2 of 4)

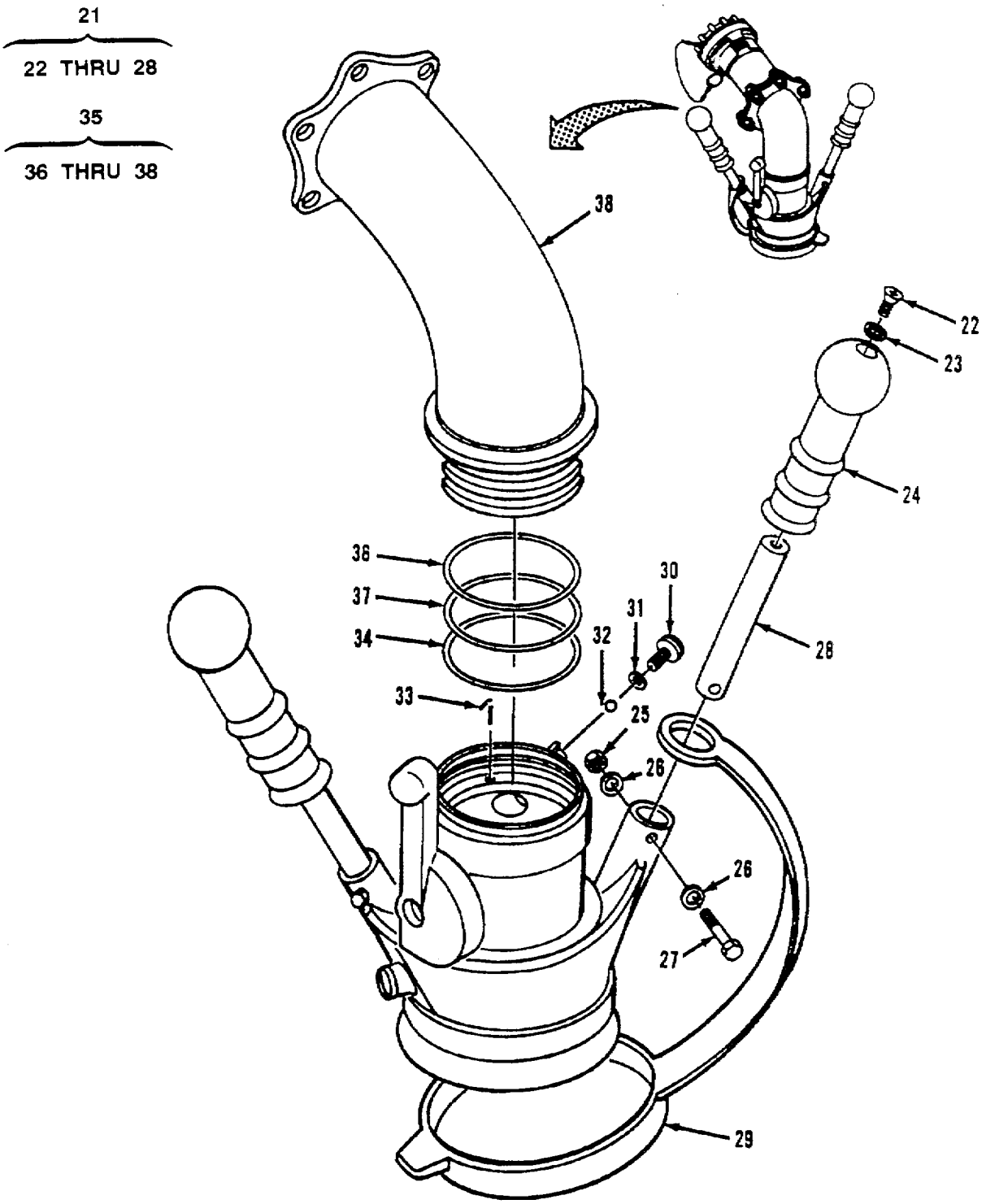

Figure C-3. Pressure Fueling Nozzle Assembly (HTARS100) (Sheet 3 of 4)

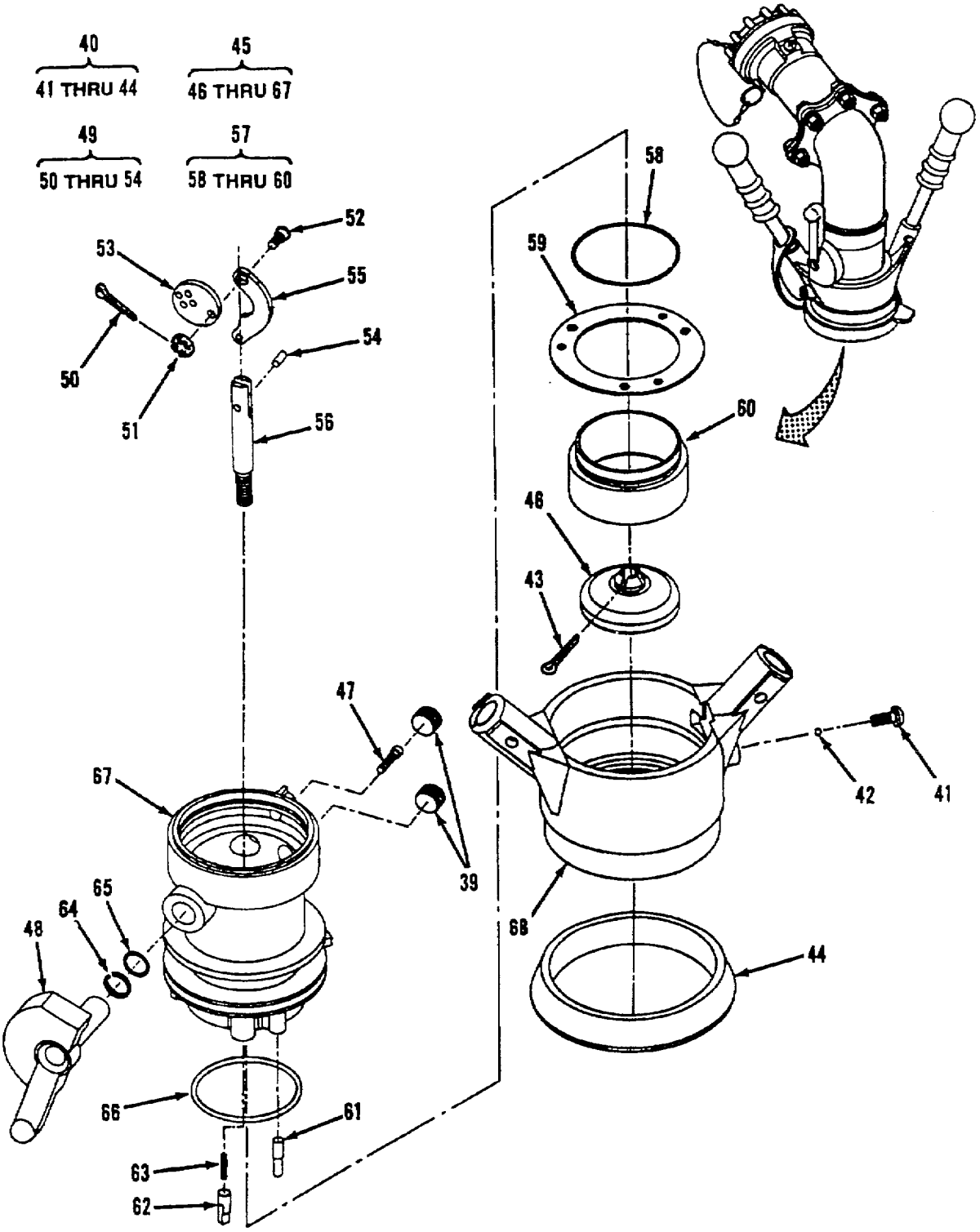

Figure C-3. Pressure Fueling Nozzle Assembly (HTARS100) (Sheet 4 of 4)

(1) ITEM NO	(2) SMR CODE	(3) CAGEC	(4) PART NUMBER	(5) DESCRIPTION AND USABLE ON CODES (UOC)	(6) QTY
				GROUP 02 SINGLE POINT REFUELING NOZZLE (TYPE D-1)	
				FIG. C-3 PRESSURE FUELING NOZZLE ASSEMBLY (HTARS100)	
1	PEOFF	0DT23	64349HX	NOZZLE ASSY, PRESSURE ..... UOC: FHG	4
2	XBOOO	0DT23	64019N	.COUPLING, UNISEX ..... UOC: FHG	1
3	PAOOO	0DT23	47032-1	..COUPLING ASSY, UNISEX..... UOC: FHG	1
4	PAOZZ	13348	8K1	...RING, WIRE ..... UOC: FHG	1
5	XBOOO	0DT23	47062	...CAP ASSY ..... UOC: FHG	1
6	PCOZZ	0DT23	220146	....SEAL ..... UOC: FHG	1
7	PAOZZ	0DT23	220162	....CAP..... UOC: FHG	1
8	KFOZZ	96906	MS35206-276	...SCREW, MACHINE PART OF KIT P/N 47033 ..... UOC: FHG	1
9	KFOZZ	96906	MS29513-010	...PACKING, PREFORMED PART OF KIT P/N 47033 ..... UOC: FHG	1
10	KFOZZ	0DT23	220265	...BALL PART OF KIT P/N 47033 ..... UOC: FHG	41
11	KFOZZ	96906	MS29513-227	...PACKING, PREFORMED PART OF KIT P/N 47033. ..... UOC: FHG	1
12	KFOZZ	0DT23	220330	...SPRING, BONDING PART OF KIT P/N 47033 ..... UOC: FHG	1
13	PCOZZ	0DT23	220146	...SEAL ..... UOC: FHG	1
14	PAOZZ	0DT23	220161	...BUMPER ..... UOC: FHG	1
15	XBOOO	0DT23	47037-1	· FLANGE ASSY, INLET ..... UOC: FHG	1
16	PAOZZ	96906	MS21083C5	...NUT, SELF-LOCKING, HEX ..... UOC: FHG	6
17	PAOZZ	88044	AN960C516	...WASHER, FLAT ..... UOC: FHG	12
18	PAOZZ	96906	MS35308-334	...BOLT, MACHINE ..... UOC: FHG	6
19	PCOZZ	0DT23	201201-151	...O-RING ..... UOC: FHG	1

(1) ITEM NO	(2) SMR CODE	(3) CAGEC	(4) PART NUMBER	(5) DESCRIPTION AND USABLE ON CODES (UOC)	(6) QTY
20	XBOZZ	0DT23	220174-1	...FLANGE, INLET UOC: FHG	1
21	XBOOO	0DT23	44807-1	.HANDLE, ASSY UOC: FHG	1
22	PAOZZ	96906	MS16997-78L	..SCREW, SELF-LOCKING UOC: FHG	2
23	PAOZZ	96906	AN960-516	..WASHER, FLAT UOC: FHG	2
24	PAOZZ	0DT23	207808	..HANDLE, BOW UOC: FHG	2
25	PAOZZ	96906	MS21042-4	..NUT, SELF-LOCKING UOC: FHG	2
26	PAOZZ	88044	AN960-416	..WASHER, FLAT UOC: FHG	4
27	PAOZZ	88044	AN4-13A	..BOLT, MACHINE UOC: FHG	2
28	XBOZZ	0DT23	210600	..HANDLE UOC: FHG	2
29	PAOZZ	0DT23	207799	.COVER, ACCESS UOC: FHG	1
30	KFOZZ	0DT23	209827	.SCREW, CAP, SOCKET HEX PART OF KIT P/N 44716 UOC: FHG	1
31	KFOZZ	96906	MS29513-013	.PACKING, PREFORMED PART OF KIT P/N 44716 UOC: FHG	1
32	KFDZZ	0DT23	82123	BALL, BEARING PART OF KIT P/N 44716 UOC: FHG	39
33	KFOZZ	0DT23	209853	.SPRING, HELICAL, COMP PART OF KIT P/N 44716 UOC: FHG	1
34	KFOZZ	81349	M25988/1-235	.PACKING, PREFORMED PART OF KIT P/N 44716 UOC: FHG	1
35	XBOOO	0DT23	44327	.ELBOW ASSY, INLET UOC: FHG	1
36	PCOZZ	0DT23	207807	..SEAL, PLAIN UOC: FHG	1
37	PCOZZ	81349	M25988/1-040	..PACKING, PREFORMED UOC: FHG	1
38	XBOZZ	0DT23	207873	..ELBOW, INLET UOC: FHG	1
39	PAFZZ	0DT23	210388	.PLUG UOC: FHG	2
40	XBOFF	0DT23	47055	.BODY, ASSY, UOC: FHG	1

(1) ITEM NO	(2) SMR CODE	(3) CAGEC	(4) PART NUMBER	(5) DESCRIPTION AND USABLE ON CODES (UOC)	(6) QTY
41	PAFZZ	0DT23	209827	..SCREW, CAP, SOCKET HEAD UOC: FHG	1
42	XBFZZ	0DT23	82123	..BALL, BEARING UOC: FHG	49
43	XBFZZ	96906	MS24665-302	..PIN, COTTER UOC: FHG	1
44	PAFZZ	0DT23	23622	..BUMPER, COLLAR, FUEL UOC: FHG	1
45	XBFFF	0DT23	47056	..BODY, ASSEMBLY UOC: FHG	1
46	XBFZZ	0DT23	210593	...POPPET, NOZZLE ASSY UOC: FHG	1
47	XBFZZ	0DT23	LP65U82J12M	...SCREW, CAP, LOCKING UOC: FHG	4
48	XBFZZ	0DT23	220270	...HANDLE, CRANK UOC: FHG	1
49	XBFZZ	0DT23	44754	...LINK ASSY UOC: FHG	1
50	XBFZZ	96906	MS24665-1013	....PIN, COTTER UOC: FHG	1
51	XBFZZ	88044	AN320C4	....NUT, PLAN, SLOTTED, HEAD UOC: FHG	1
52	XBFZZ	0DT23	207788	....PIN, CRANK UOC: FHG	1
53	XBFZZ	0DT23	207783	....PLATE, CAM UOC: FHG	1
54	XBFZZ	0DT23	D9-437	...PIN, STRAIGHT, HEADLESS. UOC: FHG	1
55	XBFZZ	0DT23	207795	....LINK, VALVE UOC: FHG	1
56	PAFZZ	0DT23	210368	...SHAFT UOC: FHG	1
57	XBFZZ	0DT23	47058	...SEAL ASSY, NOSE UOC: FHG	1
58	PAFZZ	0DT23	24636	...RING, SNAP UOC: FHG	1
59	XBFZZ	0DT23	220271	....PLATE, BEARING UOC: FHG	1
60	XBFZZ	0DT23	209029	....SEAL, PLAIN, ENCLOSED UOC: FHG	1
61	XBFZZ	0DT23	24780	...PIN, INDEX UOC: FHG	3
62	XBFZZ	0DT23	220272	...PIN, COLLAR LOCK UOC: FHG	3
63	XBPZZ	0DT23	20909	...SPRING, HELICAL, COMP UOC: FHG	3
64	XBFZZ	96906	MS28774-017	...RETAINER, PACKING UOC: FHG	1

(1) ITEM NO	(2) SMR CODE	(3) CAGEC	(4) PART NUMBER	(5) DESCRIPTION AND USABLE ON CODES (UOC)			(6) QTY
65	XBFZZ	0DT23	207792	...PACKING, PREFORMED			1
				UOC: FHG			
66	XBFZZ	81349	M25988/1-145	...PACKING, PREFORMED			1
				UOC: FHG			
67	XBFZZ	0DT23	207784	...BODY, NOZZLE, FUEL			1
				UOC: FHG			
68	XBFZZ	0DT23	220269	..COLLAR, NOZZLE			1
				UOC: FHG			
	PAOZZ	0DT23	47023	PARTS KIT, PRESSURE			1
				UOC: FHG			
				BALL, BEARING	(41)	3-8	
				PACKING, PREFORMED	(1)	3-9	
				BALL	(1)	3-10	
				PACKING, PREFORMED	(1)	3-11	
				SPRING, BONDING	(1)	3-12	
	PAOZZ	0DT23	44716	PARTS KIT, PRESSURE			1
				UOC: FHG			
				BALL, BEARING	(39)	3-32	
				PACKING, PREFORMED	(1)	3-31	
				PACKING, PREFORMED	(1)	3-34	
				SCREW, CAP, SOCKET HE	(1)	3-30	
				SPRING, HELICAL, COMP	(1)	3-33	

END OF FIGURE

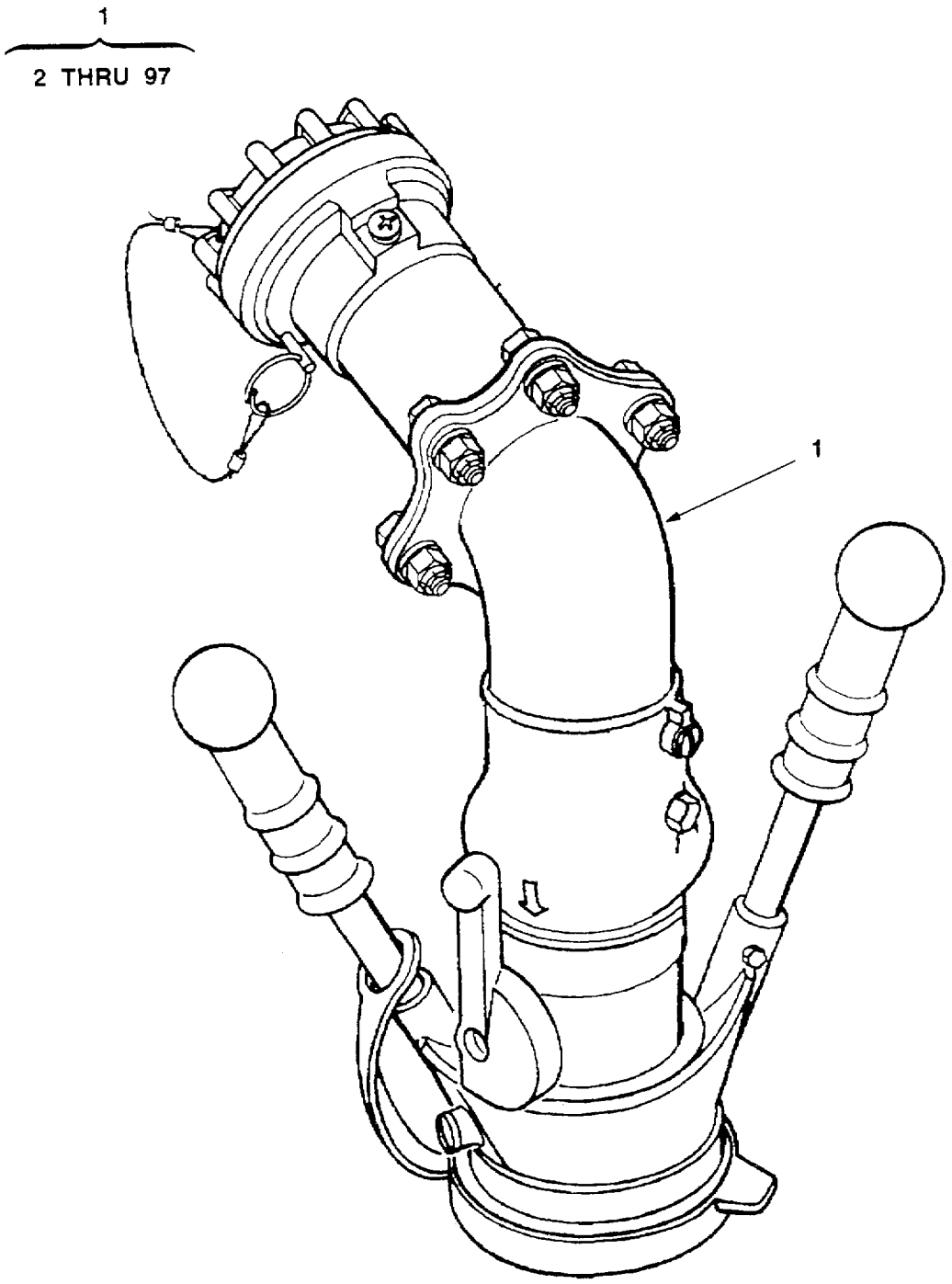

Figure C-3A. Pressure Fueling Nozzle Assembly (HTARS101) (Sheet 1 of 6)

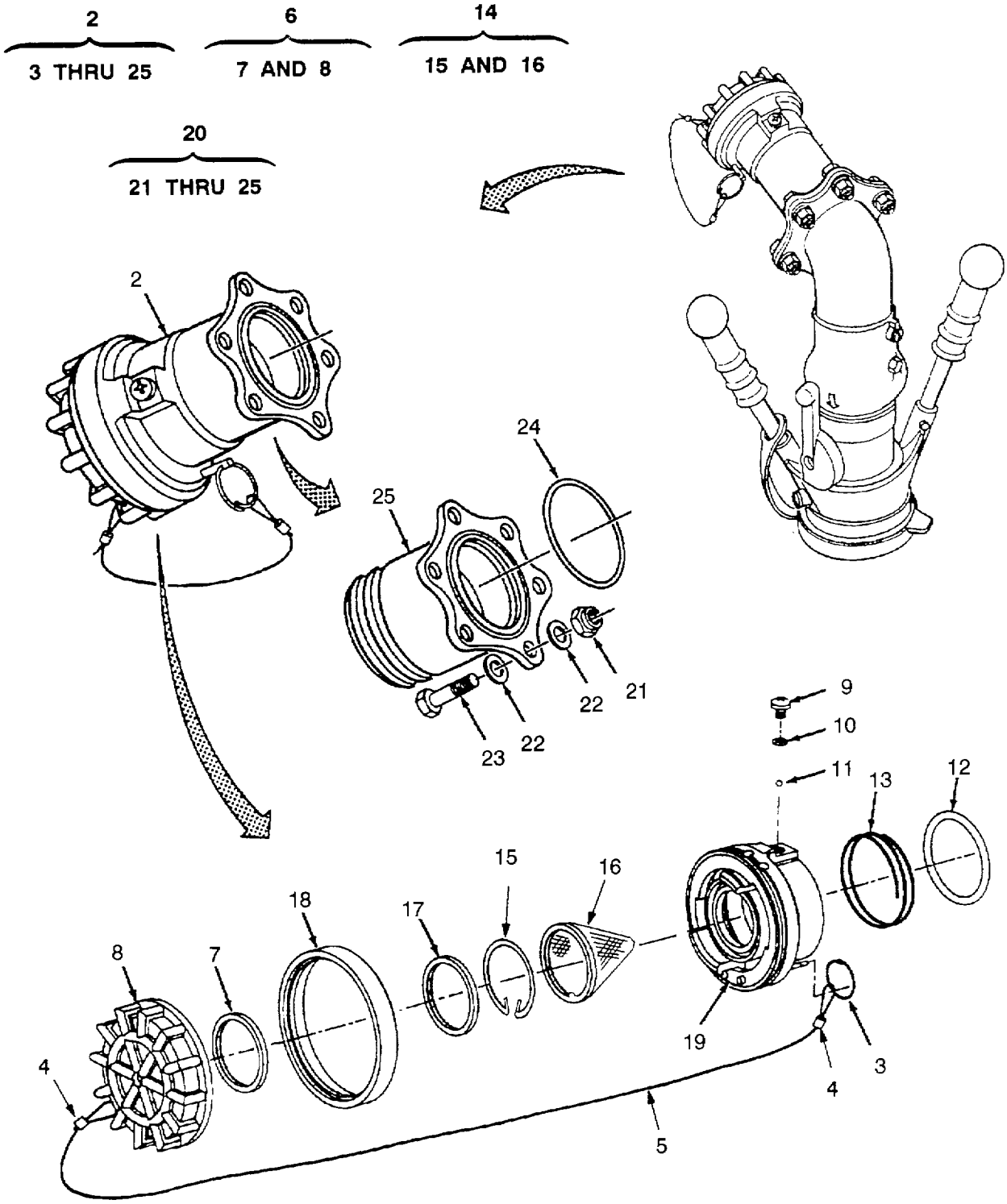

Figure C-3A. Pressure Fueling Nozzle Assembly (HTARS101) (Sheet 2 of 6)

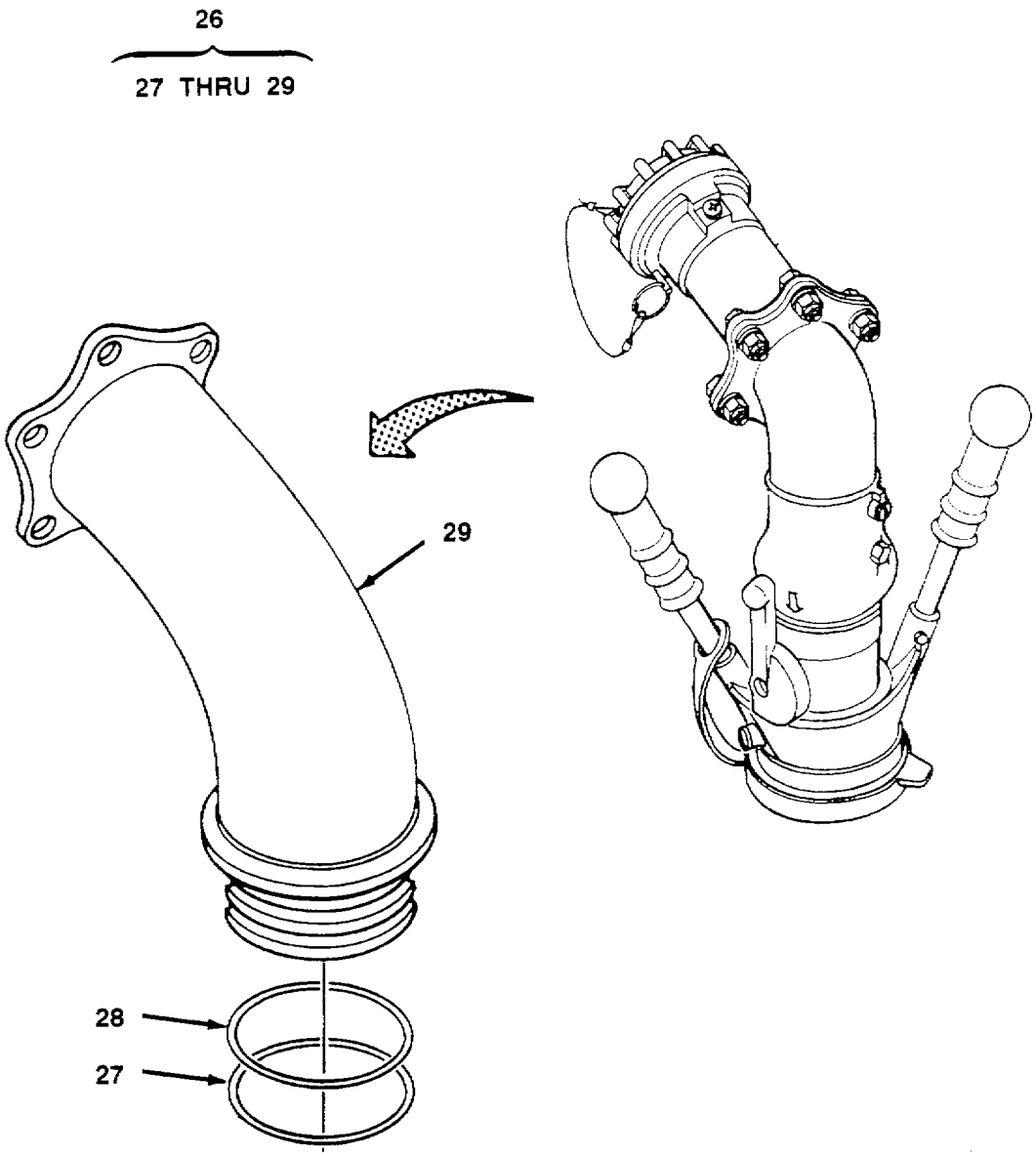

Figure C-3A. Pressure Fueling Nozzle Assembly (HTARS101) (Sheet 3 of 6)

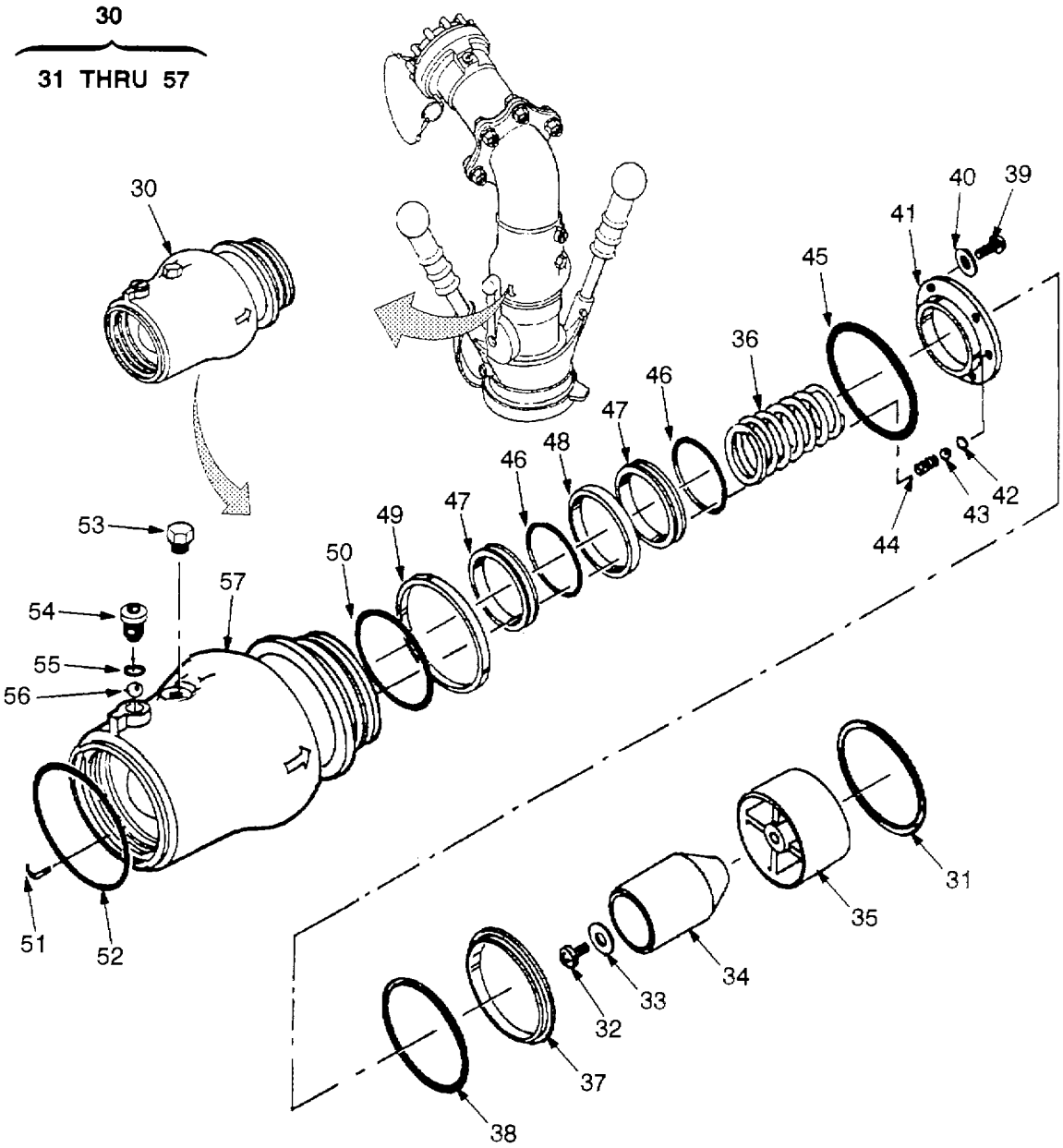

Figure C-3A. Pressure Fueling Nozzle Assembly (HTARS101) (Sheet 4 of 6)

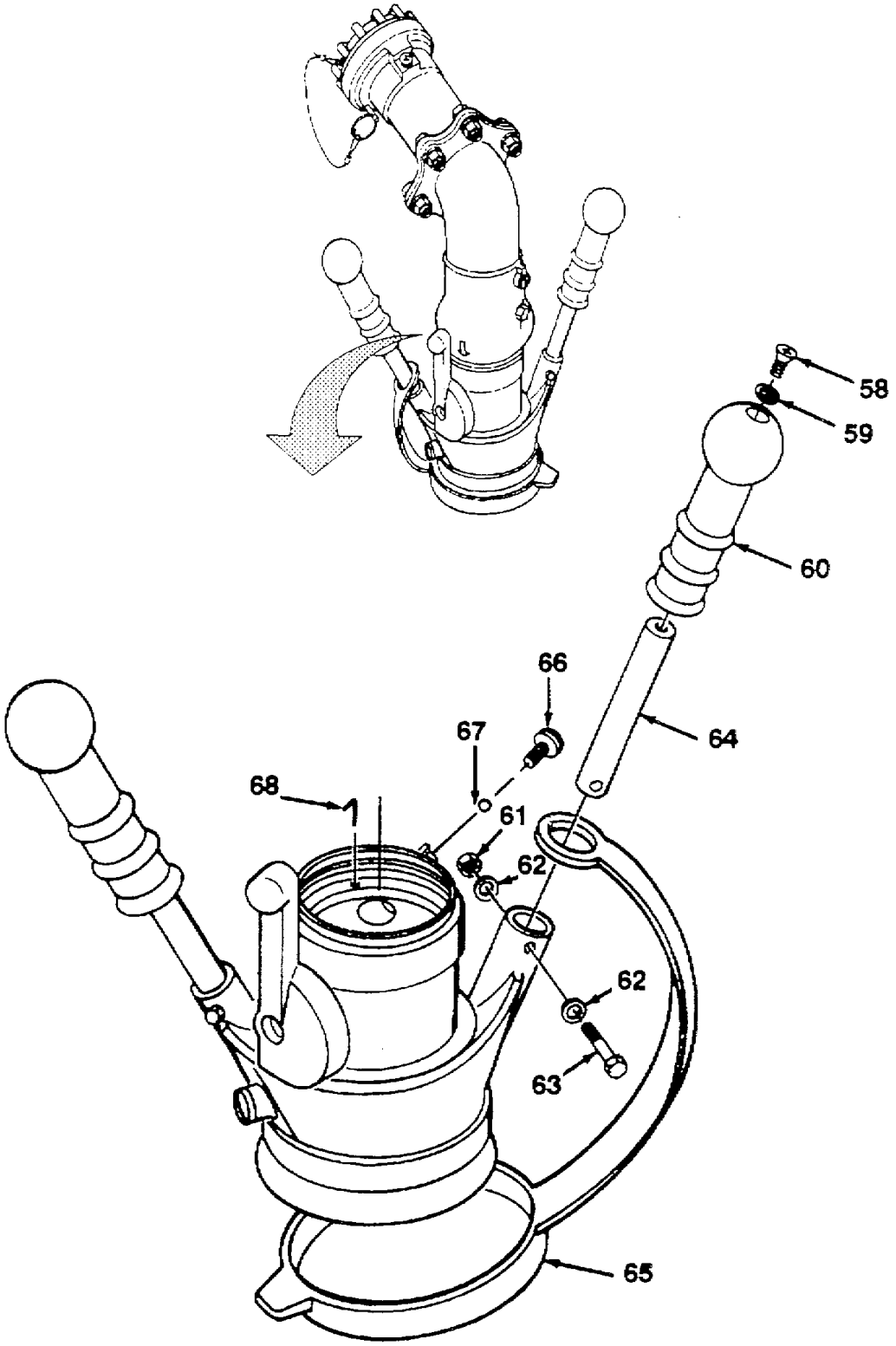

Figure C-3A. Pressure Fueling Nozzle Assembly (HTARS101) (Sheet 5 of 6)

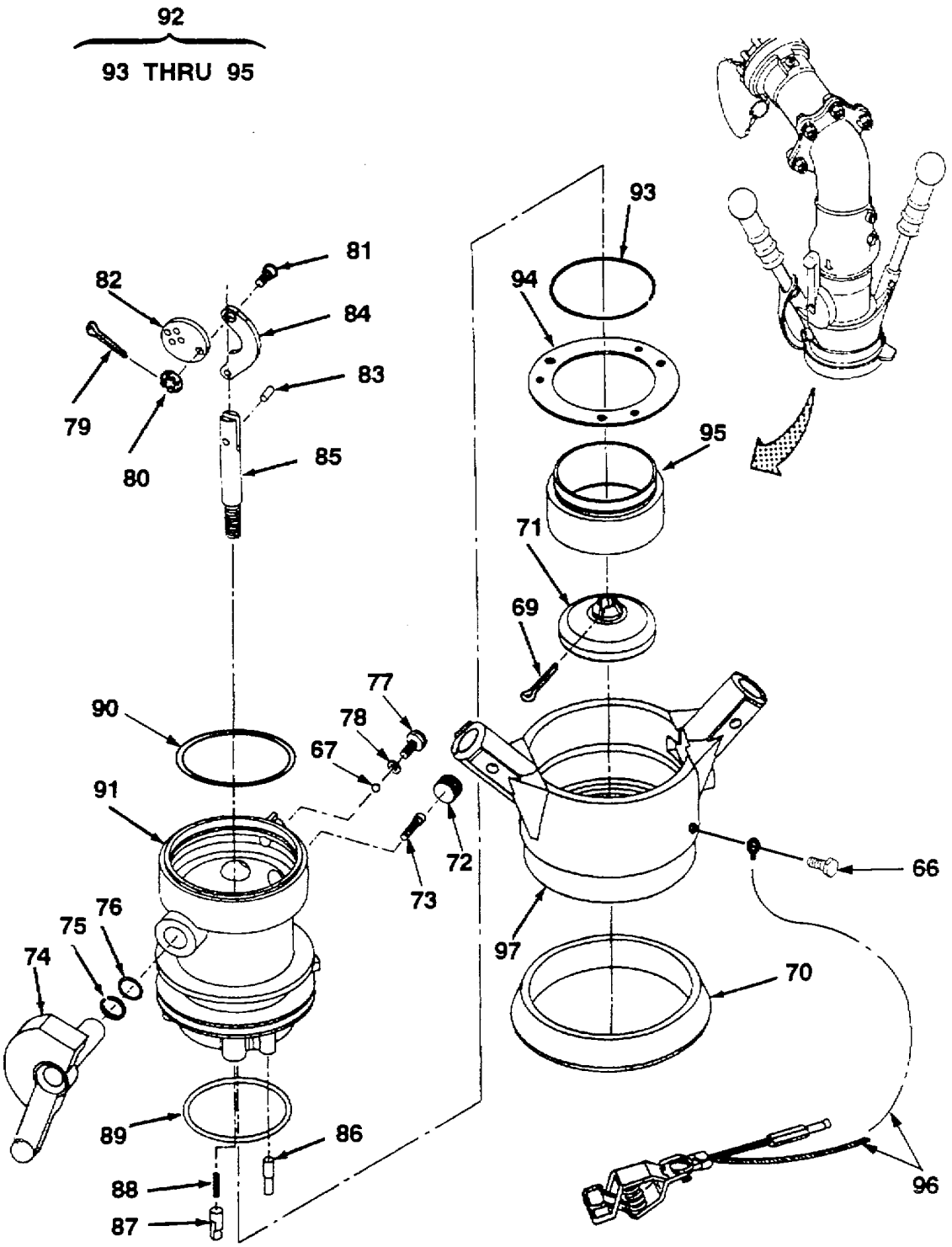

Figure C-3A. Pressure Fueling Nozzle Assembly (HTARS101) (Sheet 6 of 6)

(1) ITEM NO	(2) SMR CODE	(3) CAGEC	(4) PART NUMBER	(5) DESCRIPTION AND USABLE ON CODES (UOC)	(6) QTY
				GROUP 02 SINGLE POINT REFUELING NOZZLE (TYPE D-1)	
				FIG. C-3A PRESSURE FUELING NOZZLE ASSEMBLY (HTARS101)	
1	PEOFF	0DT23	64349CDF4HX	NOZZLE ASSY, PRESSURE UOC: FNV	4
2	XBOOO	0DT23	64019N	..COUPLING, UNISEX UOC: FNV	1
3	PAOZZ	13348	8K1	..RING, WIRE UOC: FNV	1
4	XBOZZ	0DT23	28-2-G	..SLEEVE UOC: FNV	2
5	XBOZZ	0DT23	220201-1-18	..CABLE UOC: FNV	1
6	XBOOO	0DT23	47062	...CAP ASSY UOC: FNV	1
7	KFOZZ	0DT23	220146	...SEAL PART OF KIT P/N KD64019-5 UOC: FNV	1
8	PAOZZ	0DT23	220162	...CAP UOC: FNV	1
9	KFOZZ	96906	MS35206-276	..SCREW, MACHINE PART OF KIT P/N KD64019-5 UOC: FNV	1
10	PCOZZ	96906	MS29513-010	..PACKING, PREFORMED UOC: FNV	1
11	XBOZZ	0DT23	220265	..BALL UOC: FNV	41
12	KFOZZ	96906	MS29513-227	..PACKING, PREFORMED PART OF KIT P/N KD64019-5 UOC: FNV	1
13	XBOZZ	0DT23	220330	.SPRING, BONDING UOC: FNV	1
14	PAOOO	0DT23	47115-100	..SCREEN ASSEMBLY UOC: FNV	.1
15	PAOZZ	0DT23	2204-86	..RING UOC: FNV	1
16	PAOZZ	0DT23	220479-100	..STRAINER UOC: FNV	1
17	KFOZZ	0DT23	220146	..SEAL PART OF KIT KD64019-5 UOC: FNV	1
18	PAOZZ	0DT23	220161	· BUMPER UOC: FNV	1
19	XBFZZ	0DT23	220164-1	..BODY UOC: FNV	1
20	XBOOO	0DT23	47037-1	..FLANGE ASSY, INLET UOC: FNV	1

(1) ITEM NO	(2) SMR CODE	(3) CAGEC	(4) PART NUMBER	(5) DESCRIPTION AND USABLE ON CODES (UOC)	(6) QTY
21	PAOZZ	96906	MS21083C5	...NUT, SELF-LOCKING, HEX UOC: FNV	6
22	PAOZZ	88044	AN960C516	...WASHER, FLAT UOC: FNV	12
23	PAOZZ	96906	MS35308-334	...BOLT, MACHINE UOC: FNV	6
24	KFOZZ	0DT23	201201-151	...O-RING PART OF KIT KD64019-5 UOC: FNV	1
25	XBOZZ	0DT23	220174-1	...FLANGE, INLET UOC: FNV	1
26	XBOOO	0DT23	44327	.ELBOW ASSY, INLET UOC: FNV	1
27	PCOZZ	81349	M25988/1-040	..PACKING, PREFORMED UOC: FNV	1
28	PCOZZ	0DT23	207807	..SEAL, PLAIN UOC: FNV	1
29	XBOZZ	0DT23	207873	..ELBOW, INLET UOC: FNV	1
30	PAOFF	0DT23	44646-45	..REGULATOR UOC: FNV	1
31	PAFZZ	0DT23	RRT-268S	..RETAINING RING UOC: FNV	1
32	XBFZZ	0DT23	LP526C1024R8	..SCREW UOC: FNV	1
33	KFFZZ	0DT23	600-001-10	..STAT-O-SEAL PART OF KIT P/N KD61428-5 UOC: FNV	1
34	PAFZZ	0DT23	24096	· PISTON, INNER UOC: FNV	1
35	PAFZZ	0DT23	23889	· PISTON, OUTER UOC: FNV	1
36	PAFZZ	0DT23	23892	..SPRING, PISTON UOC: FNV	1
37	KFFZZ	0DT23	23893	..RING, OUTER, PISTON PART OF KIT P/N KD61428-5 UOC: FNV	1
38	KFFZZ	96906	MS29513-147	..PACKING, PREFORMED PART OF KIT KD61428-5 UOC: FNV	1
39	XBFZZ	0DT23	LP515-8R7	..SCREW UOC: FNV	4
40	PAFZZ	88044	AN960-8	..WASHER, FLAT UOC: FNV	4
41	PAFZZ	0DT23	23890	..RETAINER, SEAL UOC: FNV	1
42	KFFZZ	0DT23	220724-007	..QUAD-RING PART OF KIT P/N 61428-5 UOC: FNV	1

(1) ITEM NO	(2) SMR CODE	(3) CAGEC	(4) PART NUMBER	(5) DESCRIPTION AND USABLE ON CODES (UOC)	(6) QTY
43	PAFZZ	96906	MS19060-1012	..BALL, BEARING UOC: FNV	1
44	PAFZZ	0DT23	210189	..SPRING, HELICAL COMP UOC: FNV	1
45	KFFZZ	0DT23	220724-229	..O-RING PART OF KIT P/N 61428-5 UOC: FNV	1
46	KFFZZ	96906	MS29513-126	..PACKING, PREFORMED PART OF KIT P/N 61428-5 UOC: FNV	1
47	KFFZZ	0DT23	24085	..GASKET PART OF KIT P/N 61428-5 UOC: FNV	2
48	KFFZZ	0DT23	24059	..SPACER, SEAL PART OF KIT P/N 61428-5 UOC: FNV	1
49	KFFZZ	0DT23	207807	..SEAL, PLAIN PART OF KIT P/N 61428-5 UOC: FNV	1
50	KFFZZ	81349	M25988/1-040	..PACKING, PREFORMED PART OF KIT PI/N 61428-5 UOC: FNV	1
51	KFFZZ	0DT23	209853	..SPRING, HELICAL, COMP PART OF KIT P/N 61428-5 UOC: FNV	1
52	KFFZZ	81349	M25988/1-235	..PACKING, PREFORMED PART OF KIT P/N 61428-5 UOC: FNV	1
53	XBOZZ	0DT23	40427	..BREATHER ASSEMBLY UOC: FNV	1
54	XBOZZ	0DT23	200484	..SCREW, CAP UOC: FNV	1
55	KFOZZ	96906	MS29512-03	..PACKING, PREFORMED PART OF KIT P/N 61428-5 UOC: FNV	1
56	PAOZZ	0DT23	82123	· BALL, BEARING UOC: FNV	39
57	XBFZZ	0DT23	209793	..HOUSING UOC: FNV	1
58	PAOZZ	96906	MS16997-78L	· SCREW, SELF-LOCKING UOC: FNV	2
59	PAOZZ	96906	AN960-516	· WASHER, FLAT UOC: FNV	2
60	PAOZZ	0DT23	207808	..HANDLE, BOW PART OF KIT KD64349-2 UOC: FNV	2
61	PAOZZ	96906	MS21042-4	NUT, SELF-LOCK ING, HEX UOC: FNV	2
62	PAOZZ	88044	AN960-416	..WASHER, FLAT UOC: FNV	4
63	PAOZZ	88044	AN4-13A	..BOLT, MACHINE UOC: FNV	2

(1) ITEM NO	(2) SMR CODE	(3) CAGEC	(4) PART NUMBER	(5) DESCRIPTION AND USABLE ON CODES (UOC)	(6) QTY
64	XBOZZ	0DT23	210600	.HANDLE UOC: FNV	2
65	KFOZZ	0DT23	207799	.COVER, ACCESS PART OF KIT PN KD64349-2 UOC: FNV	1
66	KFOZZ	0DT23	209827	.SCREW, CAP, SOCKET HEX PART OF KIT P/N KD64349-1 UOC: FNV	1
67	XBOZZ	0DT23	82123	.BALL, BEARING UOC: FNV	39
68	KFOZZ	0DT23	209853	.SPRING, HELICAL, COMP PART OF KIT P/N 44716 UOC: FNV	1
69	KFFZZ	96906	MS24665-302	.PIN, COTTER PART OF KIT KD64349-1 UOC: FNV	1
70	PAFZZ	0DT23	23622	.BUMPTER, COLLAR, FUEL UOC: FNV	1
71	KFFZZ	0DT23	210593	.POPPET, NOZZLE ASSY PART OF KD64349-1 UOC: FNV	1
72	KFFZZ	0DT23	210388	.PLUG PART OF KIT P/N KD64349-1 UOC: FNV	2
73	KFFZZ	0DT23	LP65U82J12M	.SCREW, CAP, LOCKING PART OF KIT P/N KD64349-1 UOC: FNV	4
74	KFFZZ	0DT23	220270	.HANDLE, CRANK PART OF KIT P/N KD64349-2 UOC: FNV	1
75	KFFZZ	96906	MS28774-017	.RETAINER, PACKING PART OF KIT P/N KD64349-1 UOC: FNV	1
76	KFFZZ	0DT23	207792	.PACKING, PREFORMED PART OF KIT P/N KD64349-1 UOC: FNV	1
77	KFFZZ	0DT23	209827	.SCREW, CAP, SOCKET HEX PART OF KIT KD64349-1 UOC: FNV	1
78	KFOZZ	96906	MS29513-013	.PACKING, PREFORMED PART OF KIT P/N KD64349-1 UOC: FNV	1
79	KFFZZ	96906	MS24665-1013	.PIN, COTTER PART OF KIT P/N KD64349-1 UOC: FNV	1
80	XBFZZ	88044	AN320C4	.NUT, PLAIN, SLOTTED, HEX UOC: FNV	1
81	XBFZZ	0DT23	207788	.PIN, CRANK UOC: FNV	1

(1) ITEM NO	(2) SMR CODE	(3) CAGEC	(4) PART NUMBER	(5) DESCRIPTION AND USABLE ON CODES (UOC)	(6) QTY
82	XBFZZ	0DT23	207783	PLATE, CAM UOC: FNV	1
83	XBFZZ	0DT23	D9-437	.PIN, STRAIGHT UOC: FNV	1
84	XBFZZ	0DT23	207795	LINK, VALVE UOC: FNV	1
85	PAFZZ	0DT23	210368	.SHAFT UOC: FNV	1
86	KFFZZ	0DT23	24780	.PIN, INDEX PART OF KIT P/N KD64349-2 UOC: FNV	3
87	XBFZZ	0DT23	220272	.PIN, COLLAR LOCK UOC: FNV	3
88	XBFZZ	0DT23	20909	.SPRING, HELICAL, COMP UOC: FNV	3
89	KFFZZ	81349	M25988/1-145	.PACKING, PREFORMED PART OF KIT P/N KD64349-1 UOC: FNV	1
90	KFOZZ	81349	M25988/1-235	.PACKING, PREFORMED PART OF KIT P/N KD64349-1 UOC: FNV	1
91	XBFZZ	0DT23	207784	.BODY, NOZZLE, FUEL UOC: FNV	1
92	XBFZZ	0DT23	47058	.SEAL ASSY, NOSE UOC: FNV	1
93	PCFZZ	0DT23	24636	..RING, SNAP UOC: FNV	1
94	XBFZZ	0DT23	220271	· PLATE, BEARING UOC: FNV	1
95	XBFZZ	0DT23	209029	..SEAL, PLAIN ENCASED PART OF KIT P/N KD64349-1 UOC: FNV	1
96	XBOZZ	0DT23	44311	.CABLE ASSEMBLY UOC: FNV	1
97	XBFZZ	0DT23	220269	.COLLAR NOZZLE UOC: FNV	1
	PAOZZ	0DT23	KD64019-5	KIT, PARTS PRESSURE UOC: FNV	1
				SEAL (1) 3A-7	
				SCREW, MACHINE (1) 3A-9	
				PACKING, PREFORMED (1) 3A-12	
				SEAL (1) 3A-17	
				O-RING (1) 3A-24	

(1) ITEM NO	(2) SMR CODE	(3) CAGEC	(4) PART NUMBER	(5) DESCRIPTION AND USABLE ON CODES (UOC)			(6) QTY
PAOZZ	0DT23	KD61428-5		KIT, SEAL			1
				UOC: FNV			
				STAT-O-SEAL	(1)	3A-33	
				RING, OUTER PISTON	(1)	3A-37	
				PACKING, PREFORMED	(1)	3A-38	
				QUAD-RING	(1)	3A-42	
				PACKING PREFORMED	(1)	3A-46	
				GASKET	(1)	3A-47	
				SPACER, SEAL	(1)	3A-48	
				SEAL, PLAIN	(1)	3A-49	
				PACKING, PREFORMED	(1)	3A-50	
				SPRING, HELICAL	(1)	3A-51	
				PACKING, PREFORMED	(1)	3A-52	
				PACKING, PREFORMED	(1)	3A-55	
PAOZZ	0DT23	KD64349-1		KIT, PARTS			1
				UOC: FNV			
				SCREW, CAP, SOCKET	(1)	3A-66	
				SPRING, HELICAL COMP	(1)	3A-68	
				PIN, COTTER	(1)	3A-69	
				RETAINER, PACKING	(1)	3A-76	
				SCREW, CAP, SOCKET	(1)	3A-77	
				PACKING, PREFORMED	(1)	3A-78	
				PACKING, PREFORMED	(1)	3A-88	
				SEAL, PLAIN ENCASED	(1)	3A-95	
				PACKING PREFORMED	(1)	3A-90	
PAOZZ	0DT23	KD64349-2		KIT, PARTS.....			1
				UOC: FNV			
				HANDLE, BOW	(1)	3A-60	
				COVER, ACCESS	(1)	3A-65	
				POPPET, NOZZLE ASSY	(1)	3A-71	
				PLUG	(1)	3A-72	
				SCREW, CAP, LOCKING	(1)	3A-73	
				HANDLE, CRANK	(1)	3A-74	
				PIN, INDEX	(1)	3A-86	
				END OF FIGURE			

1
2 THRU 57

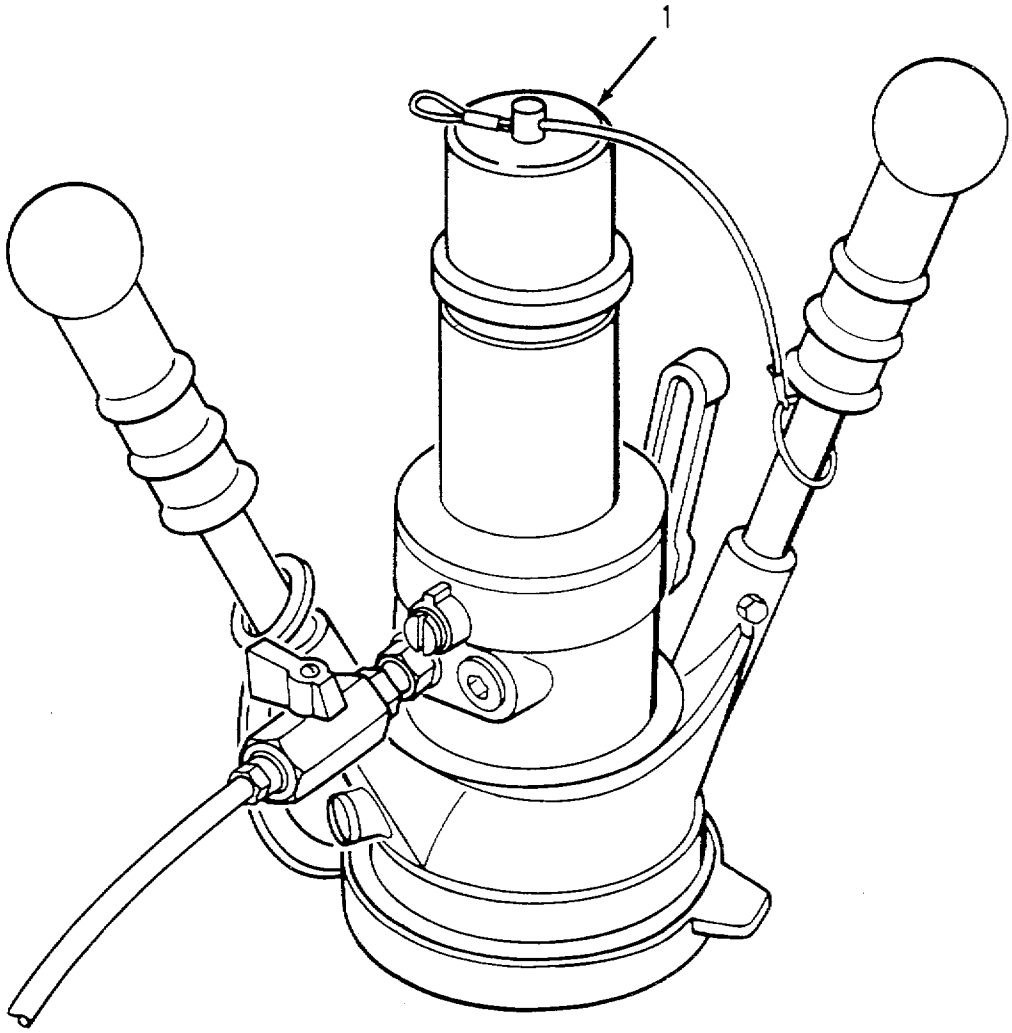

Figure C-4. Recirculation Unit (Sheet 1 of 4)

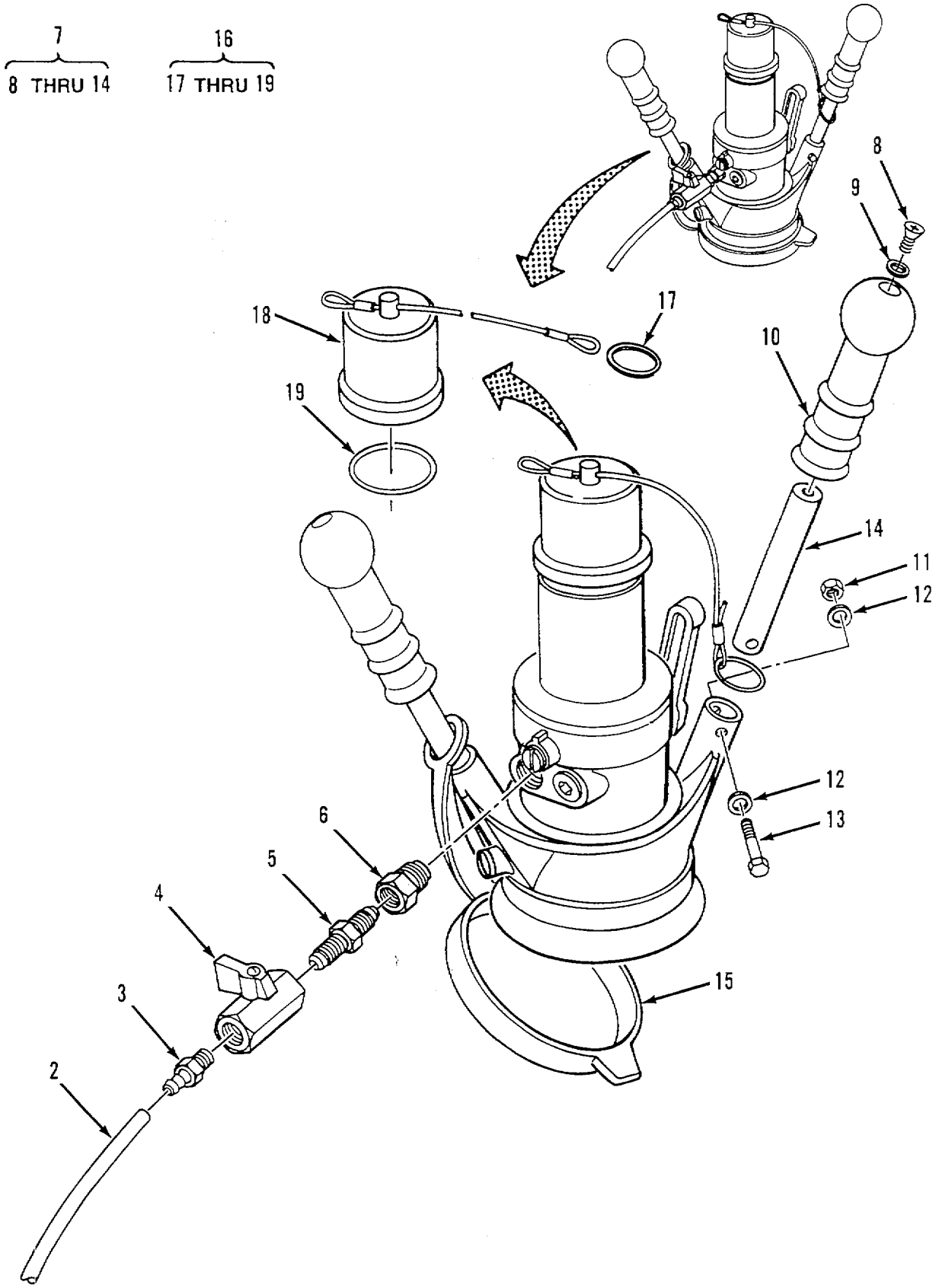

Figure C-4. Recirculation Unit (Sheet 2 of 4)

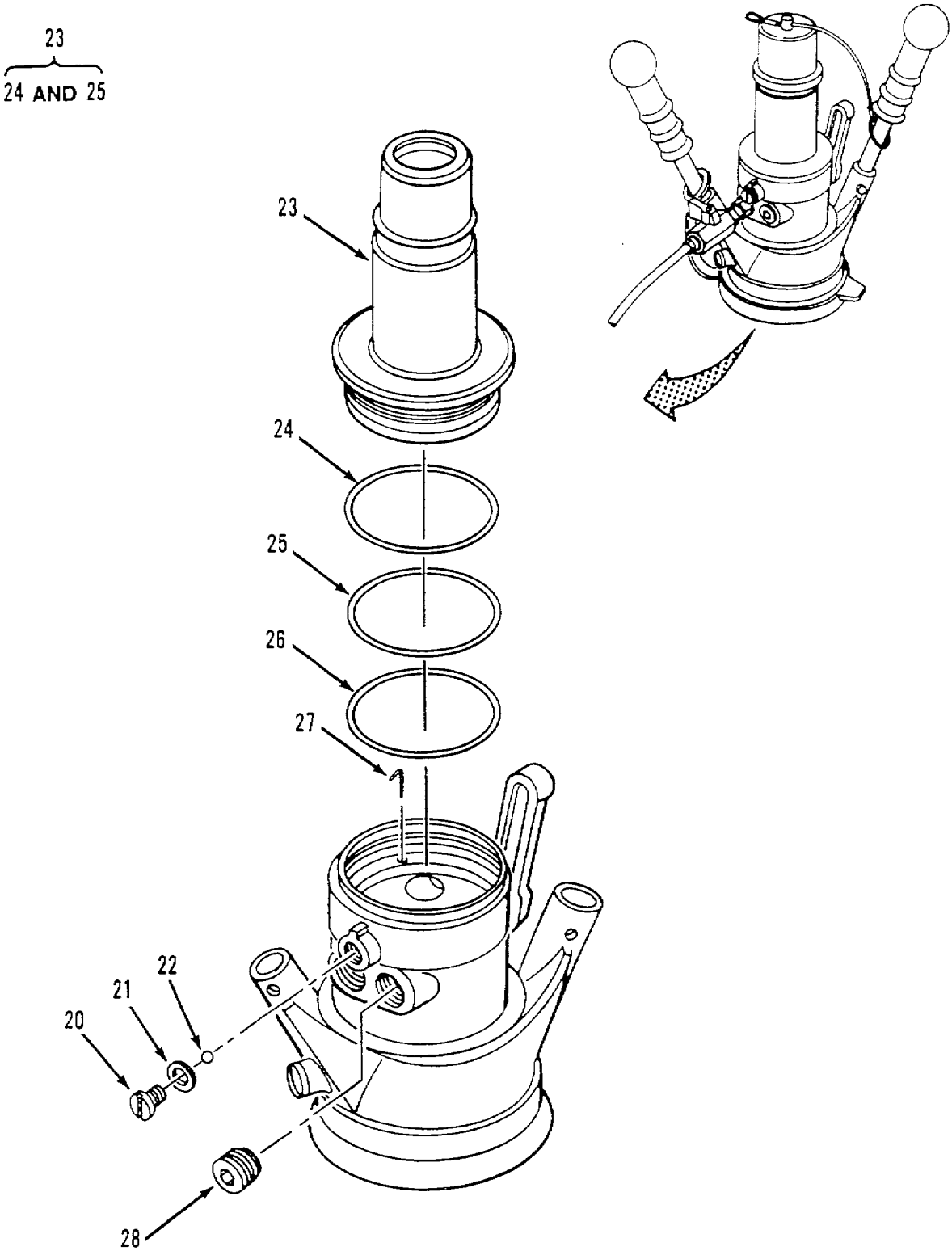

Figure C-4. Recirculation Unit (Sheet 3 of 4)

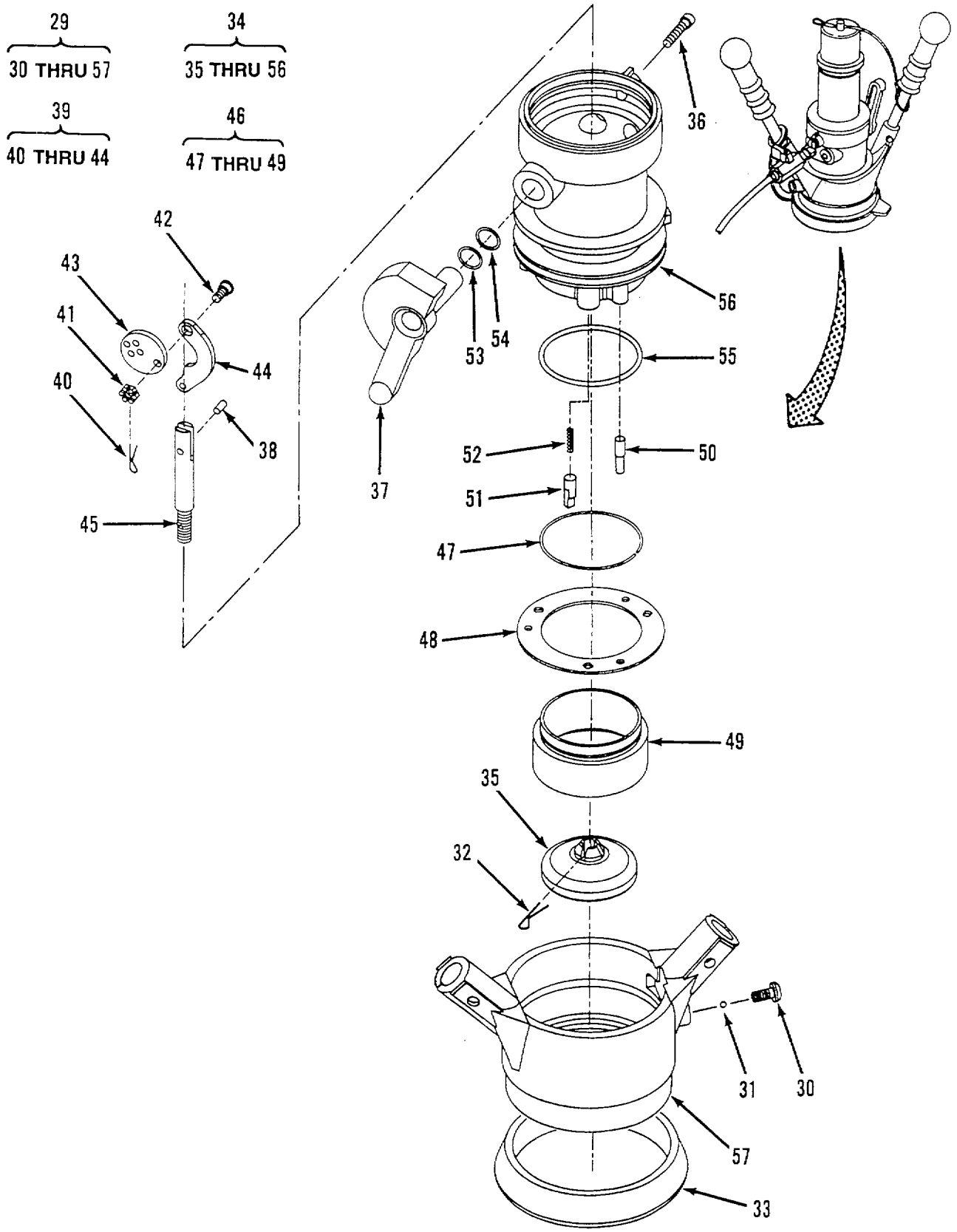

Figure C-4. Recirculation Unit (Sheet 4 of 4)

(1) ITEM NO	(2) SMR CODE	(3) CAGEC	(4) PART NUMBER	(5) DESCRIPTION AND USABLE ON CODES (UOC)	(6) QTY
				GROUP 03 RECIRCULATION NOZZLE ASSEMBLY	
				FIG. C-4 RECIRCULATION UNIT	
1	PEOFF	0DT23	64025	RECIRCULATION, UNIT	1
2	PCOZZ	0DT23	210-0224-100	.HOSE 36 INCHES LONG	3
3	PAOZZ	0DT23	2NP-218	.HOSE BARB .	1
4	PAOZZ	3A054	4912K66	.VALVE, BALL	1
5	PAOZZ	1GX11	001-5404	.COUPLING, PIPE, MALE	1
6	PAOZZ	1GX11	005-5406	.REDUCER, PIPE	1
7	XBOOO	0DT23	44807-1	.HANDLE, ASSY .	1
8	PAOZZ	96906	MS16997-78L	..SCREW , SELF-LOCKING	2
9	PAOZZ	96906	AN960-516	..WASHER, FLAT	2
10	PAOZZ	0DT23	207808	..HANDLE, BOW	2
11	PAOZZ	96906	MS21042-4	..NUT, SELF-LOCKING, EX	2
12	PAOZZ	88044	AN960-416	..WASHER, FLAT .	4
13	PAOZZ	88044	AN4-13A	..BOLT, MACHINE .	2
14	XBOZZ	0DT23	210600	..HANDLE .	2
15	PAOZZ	0DT23	207799	..COVER, ACCESS	1
16	XBOOO	0DT23	47069	.CAP ASSEMBLY, DUST .1	1
17	PAOZZ	60808	8K1	..RING, WIRE .	1
18	XBOZZ	0DT23	220224-1	..CAP, DUST, INLET .	1
19	PCOZZ	96906	MS29513-138	..PACKING, PREFORMED	1
20	PAOZZ	0DT23	209827	.SCREW, CAP, SOCKET, HE PART OF KIT P/N 44716	1
21	PCOZZ	96906	MS29513-013	PACKING, PREFORMED, PART OF KIT P/N 44716	1
22	XBOZZ	0DT23	82123	.BALL, BEARING, PART OF KIT P/N 44716.	39
23	XBOOO	0DT23	47042	.ADAPTER, RECEIVER	1
24	PCOZZ	0DT23	207807	..SEAL, PLAIN	1
25	PCOZZ	81349	M25988/1-040	..PACKING, PREFORMED	1
26	PCOZZ	81349	M25988/1-235	.PACKING, PREFORMED PART OF KIT P/N 44716	1
27	XBFZZ	0DT23	209853	.SPRING, HELICAL, COMP PART OF KIT P/N 44716	1
28	PAFZZ	0DT23	210388	.PLUG	1
29	XBOFF	0DT23	47055	.BODY ASSY	1
30	PAFZZ	0DT23	209827	..SCREW, CAP, SOCKET, HE	1
31	XBFZZ	0DT23	82123	..BALL, BEARING	49
32	XBFZZ	96906	MS24665-302	..PIN, COTTER	1
33	PAFZZ	0DT23	23622	..BUMPER, COLLAR, FUEL	1
34	XBFFF	0DT23	47056	..BODY ASSEMBLY	1
35	XBFZZ	0DT23	210593	...POPPET, NOZZLE, ASSY	1
36	XBFZZ	0DT23	LP65U82J12M	...SCREW, CAP, LOCKING	4
37	XBFZZ	0DT23	220270	...HANDLE, CRANK N	1
38	XBFZZ	0DT23	D9-437	...PIN, STRAIGHT, HEADLE	1
39	XBFFF	0DT23	44754	...LINK, ASSY	1
40	XBFZZ	96906	MS24665-1013	...PIN, COTTER	1
41	XBFZZ	88044	AN320C4	...NUT, PLAIN, SLOTTED, H	1
42	XBFZZ	0DT23	207788	...PIN, CRANK	1
43	XBFZZ	0DT23	207783	...PLATE, CAM	1

(1) ITEM NO	(2) SMR CODE	(3) CAGEC	(4) PART NUMBER	(5) DESCRIPTION AND USABLE ON CODES (UOC)			(6) QTY
44	XBFZZ	0DT23	207795	...LINK, VALVE			1
45	XBFZZ	0DT23	210368	...SHAFT			1
46	XBFFF	0DT23	47058	...SEAL ASSY, NOSE			1
47	XBFZZ	0DT23	24636	...RING, SNAP			1
48	XBFZZ	0DT23	220271	...PLATE, BEARING			1
49	XBFZZ	0DT23	209029	...SEAL, PLAIN ENCASED			1
50	XBFZZ	0DT23	24780	...PIN, INDEX			3
51	XBFZZ	0DT23	220272	...PIN, COLLAR, LOCK			3
52	XBFZZ	0DT23	20909	...SPRING, HELICAL, COMP			3
53	XBFZZ	96906	MS28774-017	...RETAINER, PACKING			1
54	PCFZZ	0DT23	207792	...PACKING, PREFORMED.			1
55	PCFZZ	81349	M25988/1-145	...PACKING, PREFORMED			1
56	XBFZZ	0DT23	207784	...BODY, NOZZLE, FUEL AN			1
57	XBFZZ	0DT23	220269	..COLLAR, NOZZLE			1
	KFOZZ	00T23	44716	PARTS KIT, PRESSURE			1
				BALL, BEARING	(39)	4-22	
				PACKING, PREFORMED	(1)	4-21	
				PACKING, PREFORMED	(1)	4-26	
				SCREW, CAP, SOCKET HE	(1)	4-20	
				SPRING, HELICAL, COMP	(1)	4-27	

END OF FIGURE

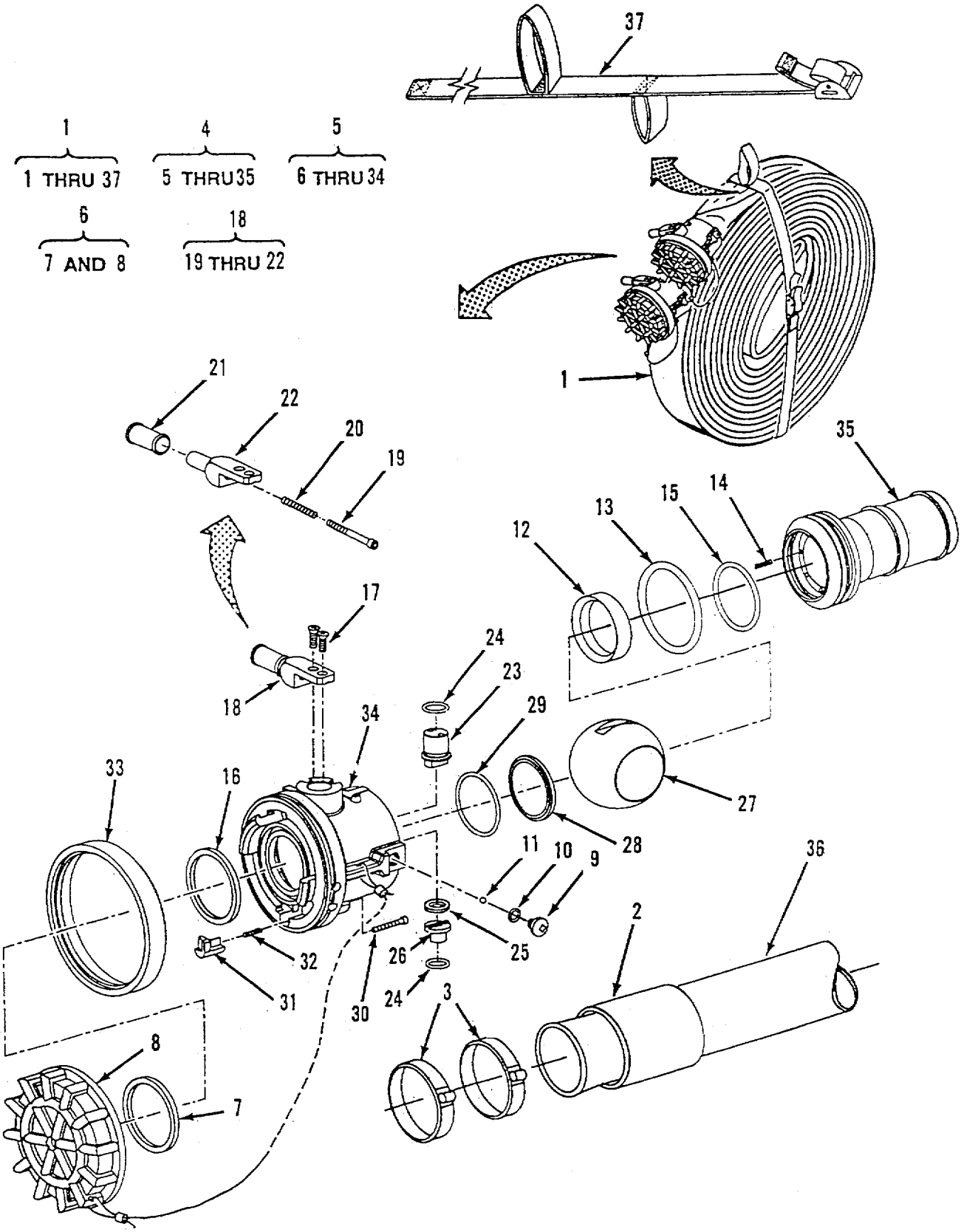

Figure C-6. Discharge Hose Assembly

(1) ITEM NO	(2) SMR CODE	(3) CAGEC	(4) PART NUMBER	(5) DESCRIPTION AND USABLE ON CODES (UOC)	(6) QTY
				GROUP 05 HOSE ASSEMBLY, 2 IN X 50FT	
				FIG. C-6 DISCHARGE HOSE ASSEMBLY	
1	XBOOO	90598	MFG 0672-3	HOSE, ASSY, DISCHARGE 2 INCH HOSE, SO FEET LONG	10
2	PCOZZ	90598	MFG-1	.SLEEVE, NEOPRENE 2 INCH DIA X 4 INCHES LONG	2
3	PAOZZ	70847	J212	.CLAMP, HOSE	4
4	PBOOO	0DT23	64020E	.COUPLING, ASSY, UNISE	2
5	XBOOO	0DT23	47031-1	..COUPLING, ASSY, UNISE	1
6	PBOOO	0DT23	47062	...CAP, ASSY	1
7	PCOZZ	0DT23	220146	...SEAL	1
8	PAOZZ	0DT23	220162	...CAP	1
9	PAOZZ	96906	MS35206-276	...SCREW, MACHINE PART OF KIT P/N 47053	1
10	PCOZZ	96906	MS29513-010	...PACKING, PREFORMED PART OF KIT P/N 47053	1
11	XBOZZ	0DT23	220265	...BALL PART OF KIT P/N 47053	41
12	XBOZZ	0DT23	220157	...SEAL, BALL, UPS TREAM PART OF KIT P/N 47053	1
13	PCOZZ	96906	MS29513-133	...PACKING, PREFORMED PART OF KIT P/N 47053	1
14	XBOZZ	0DT23	220153	....SPRING, SEAL LOADING PART OF KIT P/N 47053	8
15	PCOZZ	96906	MS29513-227	...PACKING, PREFORMED PART OF KIT P/N 47053	1
16	PCOZZ	0DT23	220146	...SEAL	1
17	PAOZZ	30308	PL24693C50	...SCREW, MACHINE	2
18	PAOOO	0DT23	47085	...LEVER, ASSY	1
19	XBOZZ	0DT23	220204	...SCREW, MACHINE	1
20	XBOZZ	0DT23	220145	....SPRING, DETENT	1
21	XBOZZ	0DT23	220142	....GRIP, VALVE, OPERATIN	1
22	XBOZZ	0DT23	220147	....ARM, TORQUE	1
23	XBOZZ	0DT23	220154	....SHAFT	1
24	PCOZZ	96906	MS29513-14	....PACKING, PREFORMED	1
25	PAOZZ	74197	W0367-006-S	....WASHER, WAVE, SPRING	1
26	PAOZZ	0DT23	220150	...PIN, STOP	1
27	XBOZZ	0DT23	220152	....BALL	1
28	XBOZZ	0DT23	220158	...SEAL, BALL, DOWNSTREA	1
29	PCOZZ	96906	MS29513-134	...PACKING, PREFORMED	1
30	PAOZZ	0DT23	GF16997-24L	...SCREW, CAP	1
31	XBOZZ	0DT23	220151	...PIN, LOCKOUT	1
32	PAOZZ	0DT23	220149	...SPRING, PIN	1
33	PAOZZ	0DT23	220161	...BUMPER	1
34	XBOZZ	0DT23	220163-1	...BODY, VALVE	1
35	XBOZZ	0DT23	220130	..BARB, HOSE	1
36	XBOZZ	OWDU1	CPFH32DMIL50	.HOSE, DISCHARGE	1
37	PBOZZ	90598	MFG0673	.STRAP, HOSE	1
	KFOZZ	0DT23	47053	KIT, COUPLER/ADAPTER	1
				BALL (41) 6-11	
				PACKING, PREFORMED (1) 6-10	

(1) ITEM NO	(2) SMR CODE	(3) CAGEC	(4) PART NUMBER	(5) DESCRIPTION AND USABLE ON CODES (UOC)			(6) QTY
				PACKING, PREFORMED	(1)	6-13	
				PACKING, PREFORMED	(1)	6-15	
				SCREW, MACHINE	(1)	6-9	
				SEAL, BALL, UPSTREAM	(1)	6-12	
				SPRING, SEAL LOADING	(8)	6-14	

END OF FIGURE

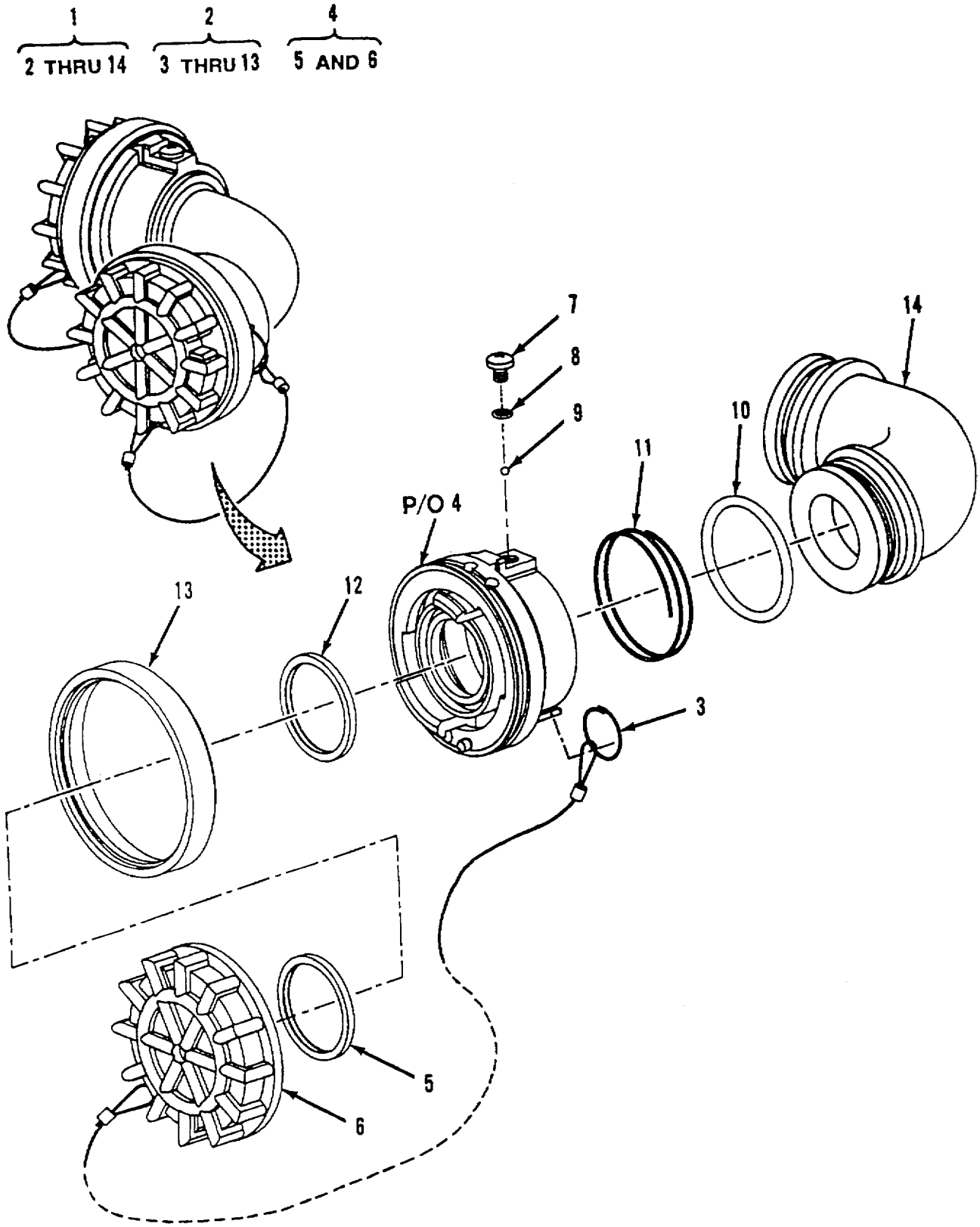

Figure C-7. Elbow Assembly (HTARS100)

(1) ITEM NO	(2) SMR CODE	(3) CAGEC	(4) PART NUMBER	(5) DESCRIPTION AND USABLE ON CODES (UOC)	(6) QTY
				GROUP 06 ELBOW ASSEMBLY	
				FIG. C-7 ELBOW ASSEMBLY (HTARS 100)	
1	XBOOO	0DT23	64023E	ELBOW ASSEMBLY, UNISEX	2
				UOC: FHG	
2	PAOOO	0DT23	47032-1	.COUPLING ASSY, UNISEX	2
				UOC: FHG	
3	PAOZZ	13348	8K1	..RING, WIRE	1
				UOC: FHG	
4	XBOOO	0DT23	47062	..CAP ASSY	1
				UOC: FHG	
5	PCOZZ	0DT23	220146	...SEAL	1
				UOC: FHG	
6	PAOZZ	0DT23	220162	...CAP	1
				UOC: FHG	
7	KFOZZ	96906	MS35206-276	..SCREW, MACHINE	
				PART OF KIT P/N47033	1
				UOC: FHG	
8	KFOZZ	96906	MS29513-010	..PACKING, PREFORMED	
				PART OF KIT P/N 47033	1
				UOC: FHG	
9	KFOZZ	0DT23	220265	..BALL PART OF KIT P/N 47033	41
				UOC: FHG	
10	KFOZZ	96906	MS29513-227	..PACKING, PREFORMED	
				PART OF KIT P/N 47033	1
				UOC: FHG	
11	KFOZZ	0DT23	220330	..SPRING, BONDING	
				PART OF KIT P/N 47033	1
				UOC: FHG	
12	PCOZZ	0DT23	220146	..SEAL	1
				UOC: FHG	
13	PAOZZ	0DT23	220161	..BUMPER	1
				UOC: FHG	
14	XBOZZ	0DT23	220170-1	.ELBOW, 90 DEG	2
				UOC: FHG	
	PAOZZ	0DT23	47033	KIT, COUPLER/ADAPTER	1
				UOC: FHG	
				BALL (41) 7-9	
				PACKING, PREFORMED (1) 7-8	
				PACKING, PREFORMED (1) 7-10	
				SCREW, MACHINE (1) 7-7	
				SPRING, BONDING (1) 7-11	

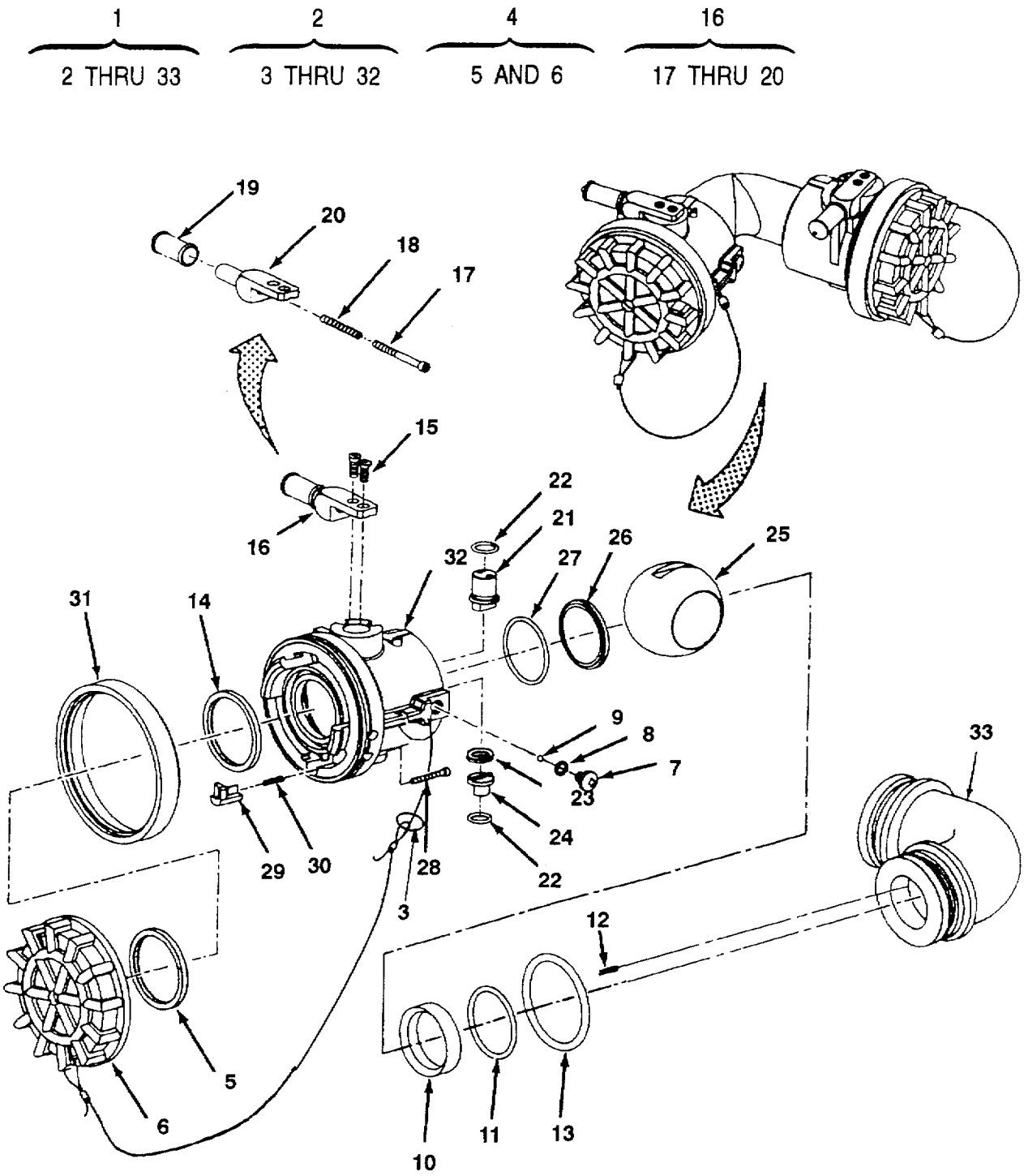

Figure C-7A. Elbow Assembly (HTARS101)

(1) ITEM NO	(2) SMR CODE	(3) CAGEC	(4) PART NUMBER	(5) DESCRIPTION AND USABLE ON CODES (UOC)	(6) QTY
				GROUP 06 ELBOW ASSEMBLY	
				FIG. C-7A ELBOW ASSEMBLY (HTARS101)	
1	XBOOO	0DT23	64023D	ELBOW ASSEMBLY UOC: FNV	1
2	XBOOO	0DT23	47031-1	.COUPLING ASSY, UNISEX UOC: FNV	1
3	PAOZZ	13348	8K1	..RING, WIRE UOC: FNV	1
4	XBOOO	0DT23	47062	...CAP ASSY UOC: FNV	1
5	PCOZZ	0DT23	220146	...SEAL UOC: FNV	1
6	PAOZZ	0DT23	220162	..CAP UOC: FNV	1
7	PAOZZ	96906	MS35206-276	..SCREW, MACHINE PART OF KIT P/N 47053 UOC: FNV	1
8	KFOZZ	96906	MS29513-010	..PACKING, PREFORMED PART OF KIT P/N 47053 UOC: FNV	1
9	KFOZZ	0DT23	220265	..BALL PART OF KIT P/N 47053 UOC: FNV	41
10	KFOZZ	0DT23	220157	..SEAL, BALL, UPSTREAM PART OF KIT P/N 47053 UOC: FNV	1
11	KFOZZ	96906	MS29513-133	..PACKING, PREFORMED PART OF KIT P/N 47053 UOC: FNV	1
12	KFOZZ	0DT23	220153	.SPRING, SEAL LOADING PART OF KIT P/N 47053 UOC: FNV	1
13	KFOZZ	96906	MS29513-227	...PACKING, PREFORMED PART OF KIT P/N 47053 UOC: FNV	1
14	PCOZZ	0DT23	220146	...SEAL UOC: FNV	1
15	PAOZZ	30308	PL24693C50	...SCREW, MACHINE UOC: FNV	2
16	PAOOO	0DT23	47085	...LEVER ASSY UOC: FNV	1
17	XBOZZ	0DT23	220204	...SCREW, MACHINE UOC: FNV	1
18	XBOZZ	0DT23	220145	SPRING, DETENT UOC: FNV	1
19	XBOZZ	0DT23	220142	...GRIP, VALVE OPERATIN UOC: FNV	1
20	XBOZZ	0DT23	220147	...ARM, TORQUE UOC: FNV	1

(1) ITEM NO	(2) SMR CODE	(3) CAGEC	(4) PART NUMBER	(5) DESCRIPTION AND USABLE ON CODES (UOC)	(6) QTY
				GROUP 06 ELBOW ASSEMBLY	
				FIG. C-7A ELBOW ASSEMBLY (HTARS101)	
21	XBOZZ	0DT23	220154	..SHAFT UOC: FNV	1
22	PCOZZ	96906	MS29513-014	..PACKING, PREFORMED UOC: FNV	2
23	PAOZZ	77535	W0367-006-S	· · WASHER, WAVE SPRING UOC: FNV	1
24	PAOZZ	0DT23	220150	PIN STOP UOC: FNV	1
25	XBOZZ	0DT23	220152	..BALL UOC: FNV	1
26	XBOZZ	0DT23	220158	..SEAL, BALL, DOWNSTREAM UOC: FNV	1
27	PCOZZ	96906	MS29513-134	..PACKING, PREFORMED UOC: FNV	1
28	PAOZZ	0DT23	GF16997-24L	..SCREW, CAP UOC: FNV	1
29	XBOZZ	0DT23	220151	..PIN, LOCKOUT UOC: FNV	1
30	PAOZZ	0DT23	220149	..SPRING, PIN UOC: FNV	1
31	PAOZZ	0DT23	220161	..BUMPER UOC: FNV	1
32	XBOZZ	0DT23	220163-1	..BODY VALVE UOC: FNV	1
33	XBOZZ	0DT23	220166-1	..ELBOW UOC: FNV	1
	PAOZZ	0DT23	47053	KIT, COUPLER/ADAPTER UOC: FNV	1
				BALL (41) 7A-9	
				PACKING, PREFORMED (1) 7A-8	
				PACKING, PREFORMED (1) 7A-11	
				PACKING, PREFORMED (1) 7A-13	
				SCREW, MACHINE (1) 7A-7	
				SPRING, SEAL LOADING (8) 7A-12	
				SEAL, BALL, UPSTREAM (1) 7A-10	
				END OF FIGURE	

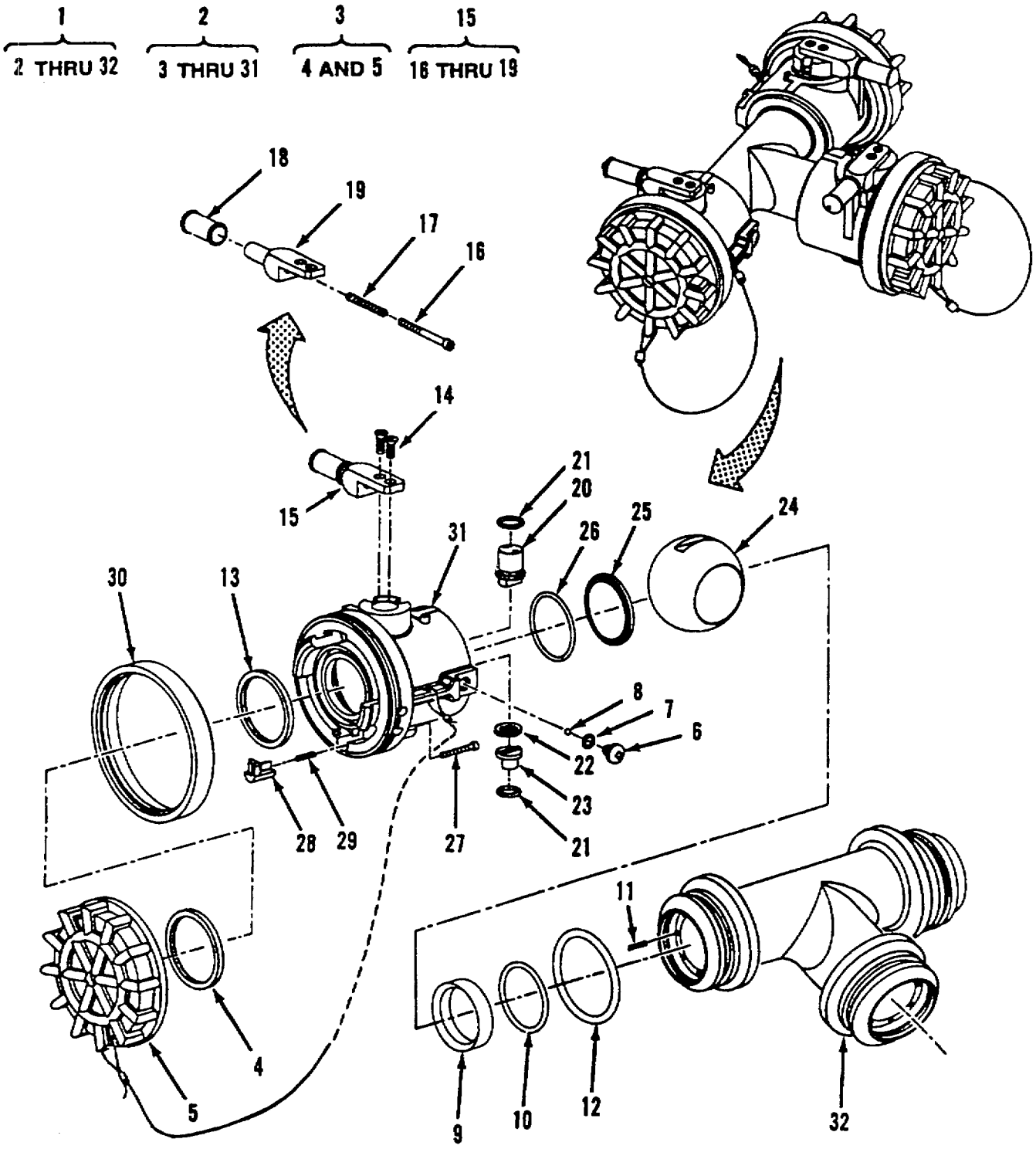

Figure C-8. Tee Assembly

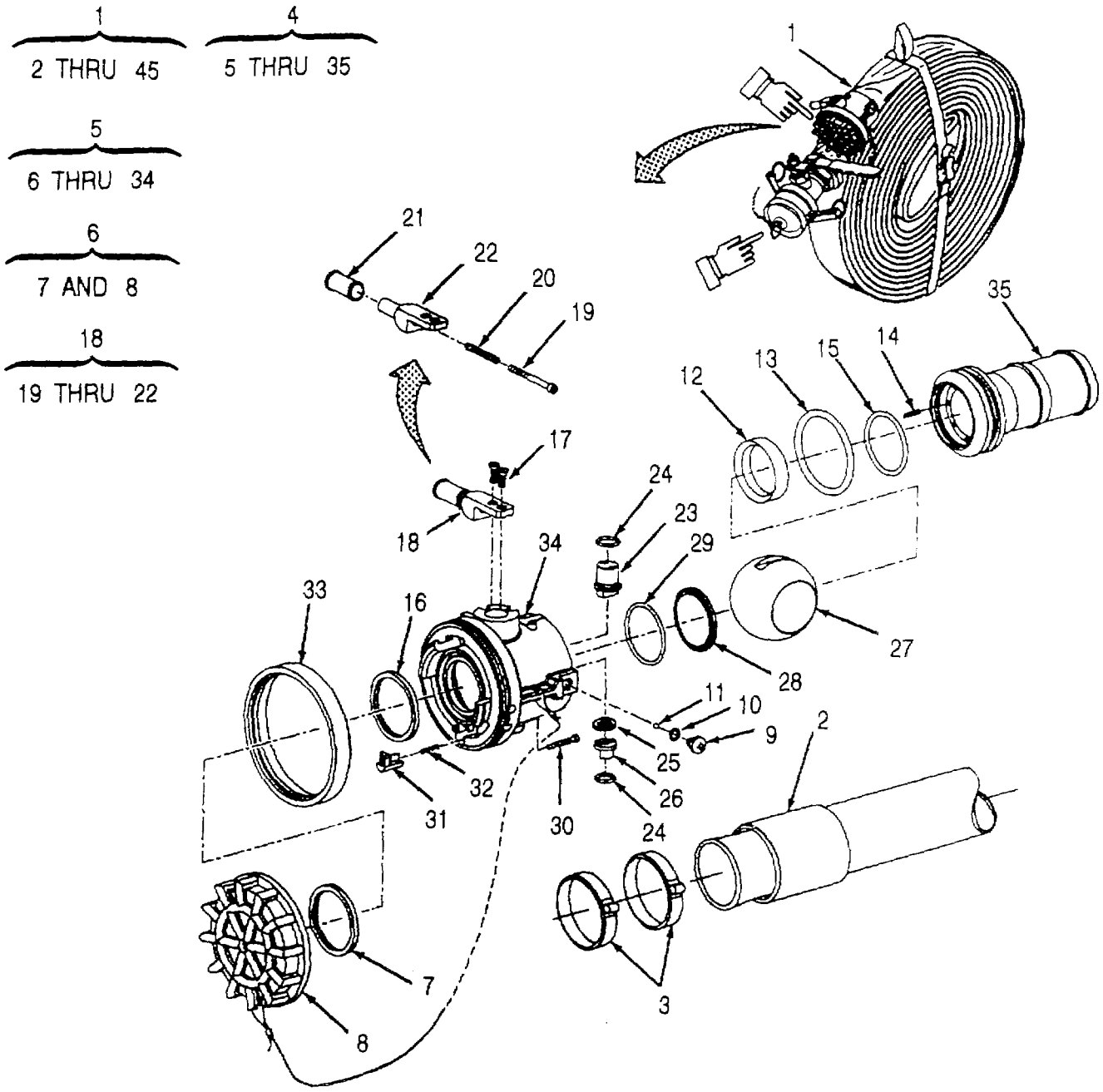

Figure C-9. Discharge Hose Assembly (Sheet 1 of 2)

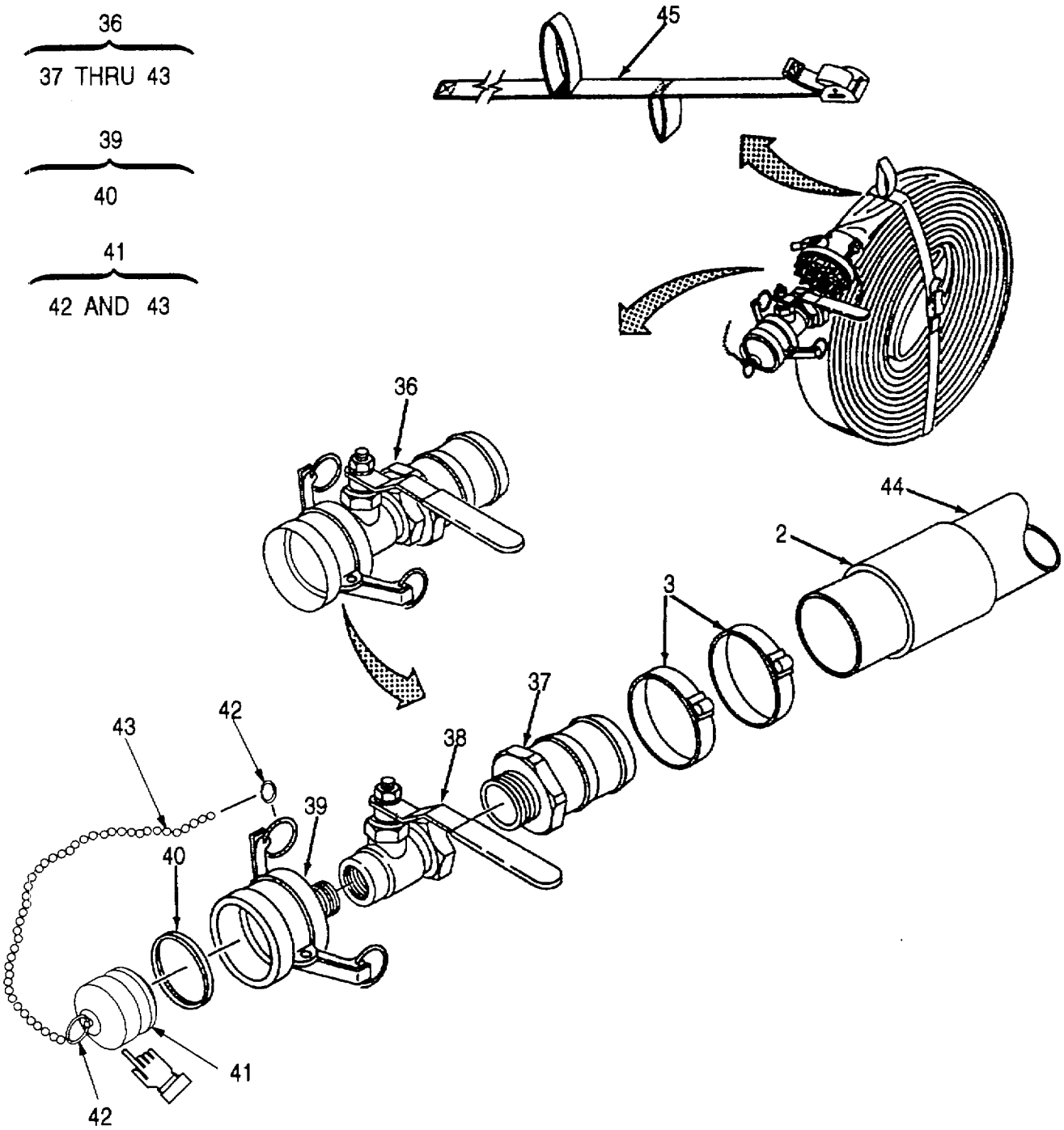

Figure C-9. Discharge Hose Assembly (Sheet 2 of 2)

(1) ITEM NO	(2) SMR CODE	(3) CAGEC	(4) PART NUMBER	(5) DESCRIPTION AND USABLE ON CODES (UOC)	(6) QTY
				GROUP 08 HOSE ASSEMBLY, 3 IN x 50FT	
				FIG. C-9 DISCHARGE HOSE ASSEMBLY	
1	PCOOO	90598	MFG 0672-1	HOSE ASSEMBLY, DISCHARGE 3 INCH HOSE 50 FEET LONG	1
2	PCOZZ	90598	MFG-2	.SLEEVE, NEOPRENE 3 INCH DIA 6 INCHES LONG	2
3	PAOZZ	70847	J213	.CLAMP, HOSE	4
4	XBOOO	0DT23	64020R	.VALVE ASSY, UNISEX COUPLING	1
5	XBOOO	0DT23	47031-1	...COUPLING ASSY, UNISEX	1
6	XBOOO	0DT23	47062	...CAP ASSY 1	
7	PCOZZ	0DT23	220146	...SEAL	1
8	PAOZZ	0DT23	220162	...CAP	1
9	KFOZZ	96906	MS35206-276	...SCREW, MACHINE PART OF KIT P/N47053	1
10	KFOZZ	96906	MS29513-010	...PACKING, PREFORMED PART OF KIT P/N 47053	1
11	KFOZZ	0DT23	220265	...BALL PART OF KIT P/N 47053	41
12	KFOZZ	0DT23	220157	...SEAL, BALL, UPSTREAM PART OF KIT P/N 47053	1
13	KFOZZ	96906	MS29513-133	...PACKING, PREFORMED PART OF KIT P/N 47053	1
14	KFOZZ	0DT23	220153	...SPRING, SEAL LOADING PART OF KIT P/N 47053	8
15	KFOZZ	96906	MS29513-227	...PACKING, PREFORMED PART OF KIT P/N 47053	1
16	PCOZZ	0DT23	220146	...SEAL	1
17	PAOZZ	30308	PL24693C50	...SCREW, MACHINE	2
18	PAOOO	0DT23	47085	...LEVER ASSY	1
19	XBOZZ	0DT23	220204	...SCREW, MACHINE	1
20	XBOZZ	0DT23	220145	...SPRING, DETENT	1
21	XBOZZ	0DT23	220142	...GRIP, VALVE OPERATING	1
22	XBOZZ	0DT23	220147	...ARM, TORQUE	1
23	XBOZZ	0DT23	220154	...SHAFT	1
24	PCOZZ	96906	MS29513-14	...PACKING, PREFORMED	2
25	PAOZZ	74197	W0367-006-S	...WASHER, WAVE SPRING	1
26	PAOZZ	0DT23	220150	...PIN STOP	1
27	XBOZZ	0DT23	220152	...BALL	1
28	XBOZZ	0DT23	220158	...SEAL, BALL, DOWNSTREAM	1
29	PCOZZ	96906	MS29513-134	...PACKING, PREFORMED	1
30	PAOZZ	0DT23	GF16997-24L	...SCREW, CAP	1
31	XBOZZ	0DT23	220151	...PIN, LOCKOUT	1
32	PAOZZ	0DT23	220149	...SPRING, PIN	1
33	PAOZZ	0DT23	220161	...BUMPER	1
34	XBOZZ	0DT23	220163-1	...BODY VALVE	1

(1) ITEM NO	(2) SMR CODE	(3) CAGEC	(4) PART NUMBER	(5) DESCRIPTION AND USABLE ON CODES (UOC)	(6) QTY
35	XBOZZ	0DT23	220129	..BARB HOSE	1
36	XBOOO	0DT23	64021-1	VALVE ASSY, BALL	1
37	XBOZZ	0DT23	220253-1	..BARB HOSE	1
38	XBOZZ	0DT23	220277	..VALVE, BALL, FULL BORE	1
39	XBOOO	0DT23	3020BAL-TN	..COUPLING HALF, QUICK DISCONNECT	1
40	PCOZZ	96906	MS27030-8	...GASKET	1
41	PAOOO	96906	MS27029-15	..PLUG, QUICK DISCONNECT UOC: FNV	1
42	PAOZZ	81718	H01434M	...RING RETAINING UOC: FNV	1
43	MOOZZ	80244	RR-C-271, TY2 CL3	...CHAIN WELDLESS, CUT 15 LINKS UOC: FNV	1
44	XBOZZ	OWSD1	CPFH48DMIL50	.HOSE	1
45	XBOZZ	90598	MFG0673	.STRAP, HOSE	1
	PAOZZ	0DT23	47053	KIT, COUPLER/ADAPTER	1
				BALL (41) 9-11	
				PACKING, PREFORMED (1) 9-10	
				PACKING, PREFORMED (1) 9-13	
				PACKING, PREFORMED (1) 9-15	
				SCREW, MACHINE (1) 9-9	
				SPRING, SEAL LOADING (8) 9-14	

END OF FIGURE

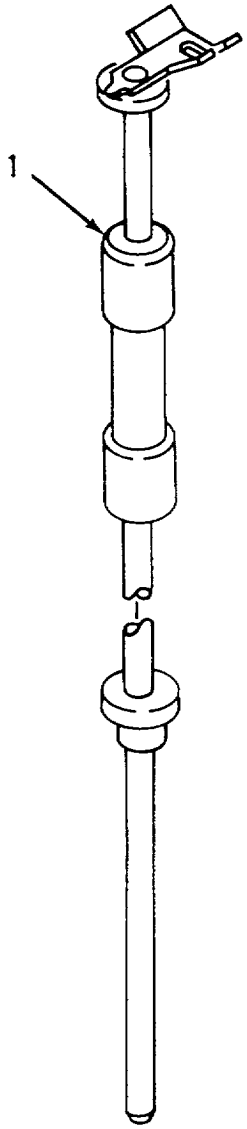

Figure C-10. Ground Rod

(1) ITEM NO	(2) SMR CODE	(3) CAGEC	(4) PART NUMBER	(5) DESCRIPTION AND USABLE ON CODES (UOC)	(6) QTY
				GROUP 09 ADAPTERS	
				FIG. C-10 GROUND ROD	
1	PBOZZ	97403	13219E0462	ROD, GROUND.....	1
				END OF FIGURE	

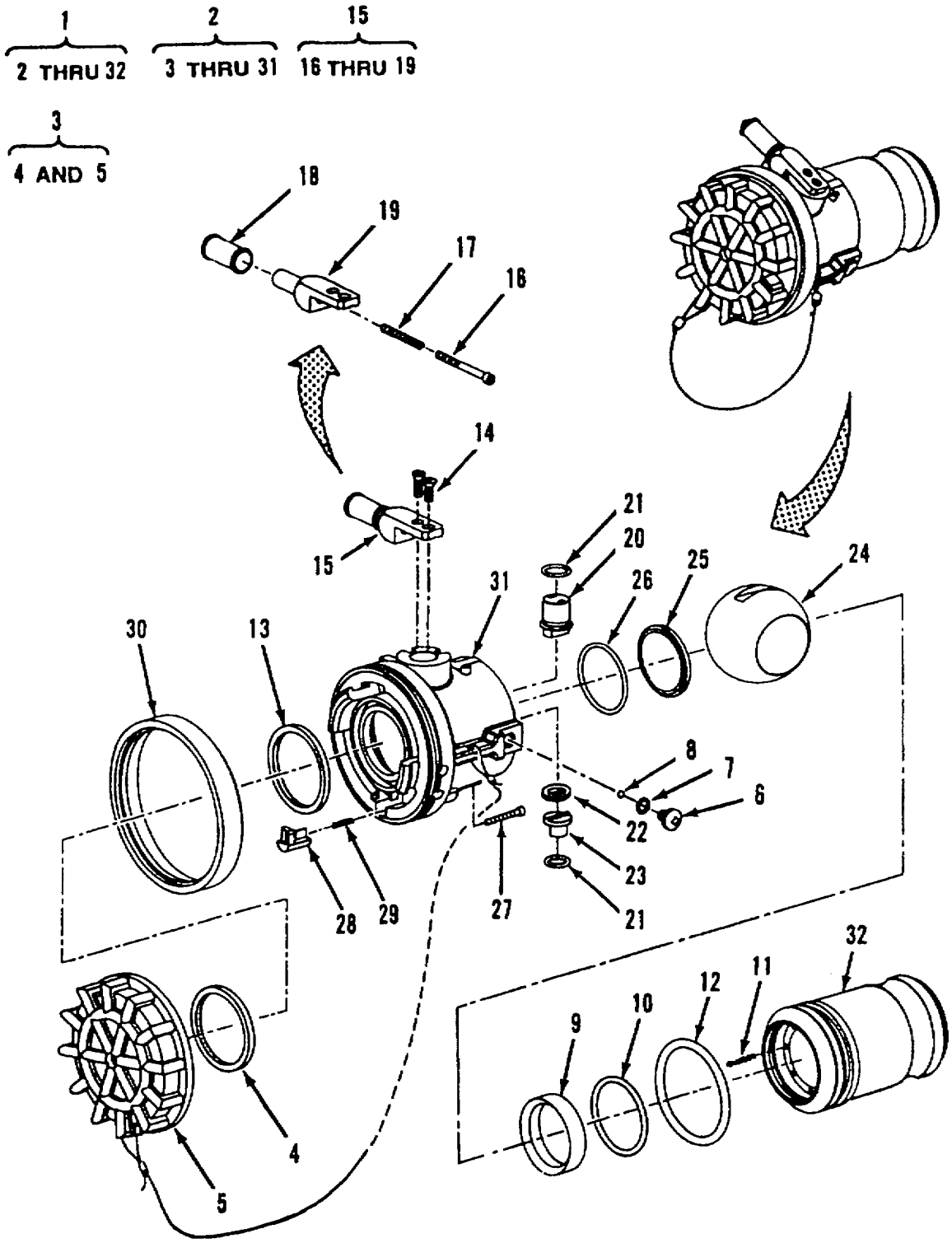

Figure C-11. Valve Assembly (HTARS100)

(1) ITEM NO	(2) SMR CODE	(3) CAGEC	(4) PART NUMBER	(5) DESCRIPTION AND USABLE ON CODES (UOC)	(6) QTY
				GROUP 09 ADAPTERS	
				FIG. C-11 VALVE ASSEMBLY(HTARS100)	
1	PBOOO	0DT23	64020F	VALVE ASSY, UNISEX COUPLING ..... UOC: FHG	1
2	XBOOO	0DT23	47031-1	.COUPLING ASSY, UNISEX ..... UOC: FHG	1
3	XBOOO	0DT23	47062	..CAP ASSY ..... UOC: FHG	1
4	PCOZZ	0DT23	220146	...SEAL..... UOC: FHG	1
5	PAOZZ	0DT23	220162	...CAP ..... UOC: FHG	1
6	KFOZZ	96906	MS35206-276	..SCREW, MACHINE PART OF KIT P/N47053..... UOC: FHG	1
7	KFOZZ	96906	MS29513-010	..PACKING, PREFORMED PART OF KIT P/N 47053 ..... UOC: FHG	1
8	KFOZZ	0DT23	220265	..BALL PART OF KIT P/N 47053 ..... UOC: FHG	41
9	KFOZZ	0DT23	220157	..SEAL, BALL, UPSTREAM PART OF KIT P/N 47053 ..... UOC: FHG	1
10	KFOZZ	96906	MS29513-133	..PACKING, PREFORMED PART OF KIT P/N 47053 ..... UOC: FHG	1
11	KFOZZ	0DT23	220153	.SPRING, SEAL LOADING PART OF KIT P/N 47053 ..... UOC: FHG	8
12	KFOZZ	96906	MS29513-227	..PACKING, PREFORMED PART OF KIT P/N 47053 ..... UOC: FHG	1
13	PCOZZ	0DT23	220146	..SEAL ..... UOC: FHG	1
14	PAOZZ	30308	PL24693C50	..SCREW, MACHINE ..... UOC: FHG	2
15	PAOOO	0DT23	47085	..LEVER ASSY ..... UOC: FHG	1
16	XBOZZ	0DT23	220204	...SCREW, MACHINE ..... UOC: FHG	1
17	XBOZZ	0DT23	220145	...SPRING, DETENT..... UOC: FHG	1
18	XBOZZ	0DT23	220142	...GRIP, VALVE OPERATING ..... UOC: FHG	1
19	XBOZZ	0DT23	220147	...ARM, TORQUE ..... UOC: FHG	1

(1) ITEM NO	(2) SMR CODE	(3) CAGEC	(4) PART NUMBER	(5) DESCRIPTION AND USABLE ON CODES (UOC)	(6) QTY
20	XBOZZ	0DT23	220154	..SHAFT UOC: FHG	1
21	PCOZZ	96906	MS29513-14	..PACKING, PREFORMED UOC: FHG	2
22	PAOZZ	77535	W0367-006-S	..WASHER, WAVE SPRING UOC: FHG	1
23	PAOZZ	0DT23	220150	..PIN STOP UOC: FHG	1
24	XBOZZ	0DT23	220152	..BALL UOC: FHG	1
25	XBOZZ	0DT23	220158	..SEAL, BALL, DOWNSTREAM UOC: FHG	1
26	PCOZZ	96906	MS29513-134	..PACKING, PREFORMED UOC: FHG	1
27	PAOZZ	0DT23	GF16997-24L	..SCREW, CAP UOC: FHG	1
28	XBOZZ	0DT23	220151	..PIN, LOCKOUT UOC: FHG	1
29	PAOZZ	0DT23	220149	..SPRING, PIN UOC: FHG	1
30	PAOZZ	0DT23	220161	..BUMPER UOC: FHG	1
31	XBOZZ	0DT23	220163-1	..BODY VALVE UOC: FHG	1
32	XBOZZ	0DT23	220124	.CAMLOCK, MALE UOC: FHG	1
	PAOZZ	0DT23	47053	KIT, COUPLER/ADAPTER UOC: FHG	1
				BALL (41) 11-8	
				PACKING, PREFORMED (1) 11-7	
				PACKING, PREFORMED (1) 11-10	
				PACKING, PREFORMED (1) 11-12	
				SCREW, MACHINE (1) 11-6	
				SEAL, BALL (1) 11-9	
				SPRING, SEAL LOADING (8) 11-11	

END OF FIGURE

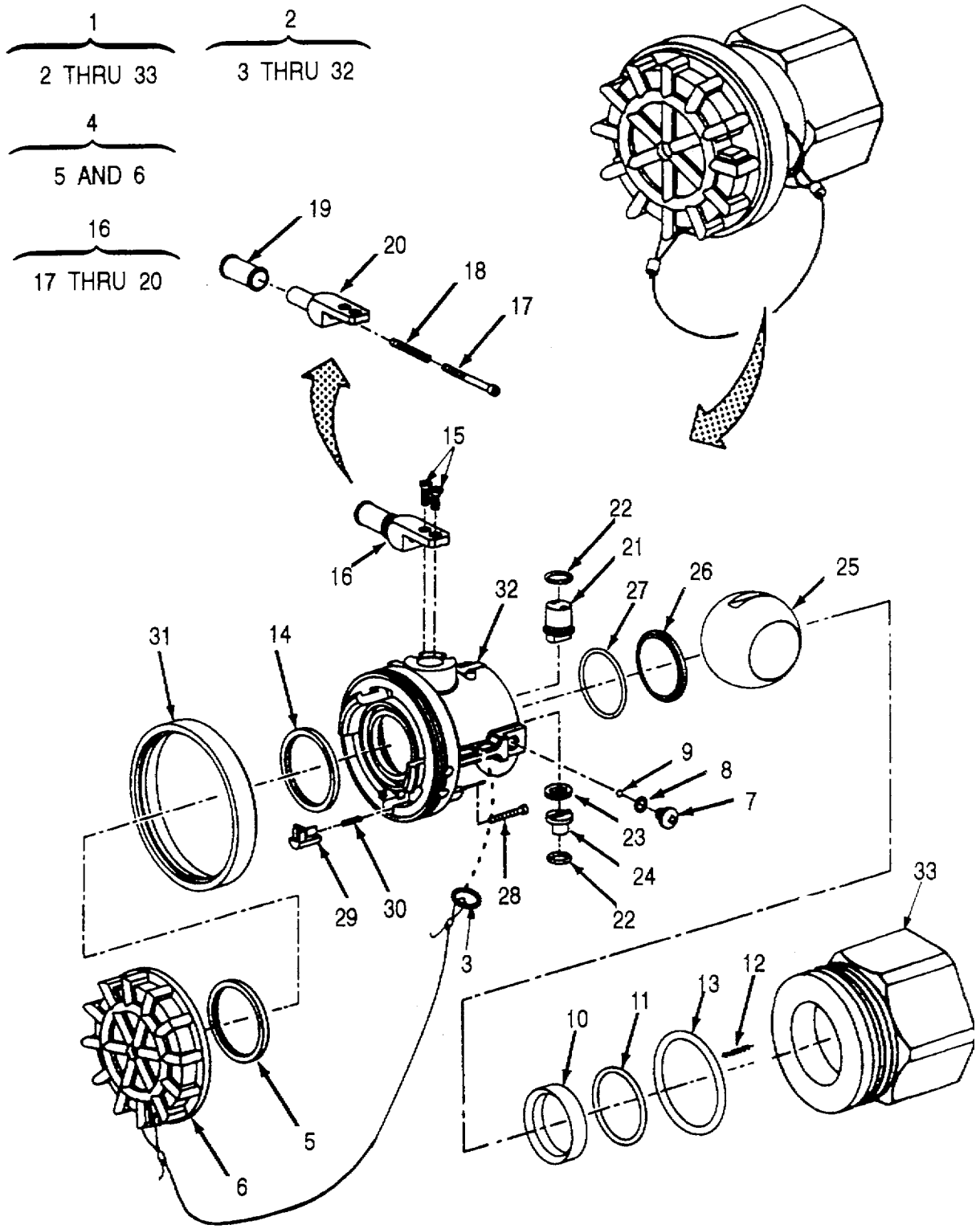

Figure C-11A. Valve Assembly (HTARS101)

(1) ITEM NO	(2) SMR CODE	(3) CAGEC	(4) PART NUMBER	(5) DESCRIPTION AND USABLE ON CODES (UOC)	(6) QTY
				GROUP 09 ADAPTERS	
				FIG. C-11A VALVE ASSEMBLY (HTARS101)	
1	PBOOO	0DT23	64020R	VALVE ASSY, UNISEX COUPLING ..... UOC: FNV	1
2	XBOOO	0DT23	47031-1	.COUPLING ASSY, UNISEX ..... UOC: FNV	1
3	PAOZZ	13348	8K1	..RING, WIRE ..... UCO: FNV	1
4	XBOOO	0DT23	47062	..CAP ASSY ..... UCO: FNV	1
5	PCOZZ	0DT23	220146	...SEAL ..... UCO: FNC	1
6	PAOZZ	0DT23	220162	...CAP	1
7	KFOZZ	96906	MS35206-276	..SCREW, MACHINE PART OF KIT P/N47053 ..... UOC: FNV	1
8	KFOZZ	96906	MS29513-010	..PACKING, PREFORMED PART OF KIT P/N KD64020-2 ..... UOC: FNV	1
9	KFOZZ	0DT23	220265	..BALL PART OF KIT P/N 47053 ..... UOC: FNV	41
10	KFOZZ	0DT23	220157	..SEAL, BALL, UPSTREAM PART OF KIT P/N KD64020-2 ..... UOC FNV	1
11	KFOZZ	96906	MS29513-133	..PACKING, PREFORMED PART OF KIT P/N KD64020-2 ..... UOC: FNV	1
12	KFOZZ	0DT23	220153	.SPRING, SEAL LOADING PART OF KIT P/N 47053 ..... UOC: FNV	8
13	KFFZZ	96906	MS29513-227	..PACKING, PREFORMED PART OF KIT P/N KD64020-2 ..... UOC: FNV	1
14	PCOZZ	0DT23	220146	..SEAL PART OF KIT P/N KD64020-2 ..... UOC: FNV	1
15	PAOZZ	30308	PL24693C50	..SCREW, MACHINE	2
16	PAOOO	0DT23	47085	..LEVER ASSY ..... UOC: FNV	1
17	XBOZZ	0DT23	220204	...SCREW, MACHINE ..... UOC: FNV	1
18	XBOZZ	0DT23	220145	...SPRING, DETENT ..... UOC: FNV	1
19	XBOZZ	0DT23	220142	...GRIP, VALVE OPERATING ..... UOC: FNV	1

(1) ITEM NO	(2) SMR CODE	(3) CAGEC	(4) PART NUMBER	(5) DESCRIPTION AND USABLE ON CODES (UOC)	(6) QTY
				GROUP 09 ADAPTERS	
				FIG. C-11 VALVE ASSEMBLY	
1	PBOOO	0DT23	64020F	VALVE ASSY, UNISEX C	1
2	XBOOO	0DT23	47031-1	.COUPLING ASSY, UNISE	1
3	PBOOO	0DT23	47062	..CAP ASSY	1
4	PCOZZ	0DT23	220146	...SEAL	1
5	PAOZZ	0DT23	220162	...CAP	1
6	PAOZZ	96906	MS35206-276	..SCREW, MACHINE PART OF KIT P/N 47053	1
7	PCOZZ	96906	MS29513-010	..PACKING, PREFORMED PART OF KIT P/N 47053	1
8	XBOZZ	0DT23	220265	..BALL PART OF KIT P/N 47053	41
9	XBOZZ	0DT23	220157	..SEAL, BALL, UPSTREAM PART OF KIT P/ N 47053	1
10	PCOZZ	96906	MS29513-133	..PACKING, PREFORMED PART OF KIT P/N 47053	1
11	XBOZZ	0DT23	220153	.SPRING, SEAL LOADING PART OF KIT P/N 47053	8
12	PCFZZ	96906	MS29513-227	..PACKING, PREFORMED PART OF KIT P/N 47053	1
13	PCOZZ	0DT23	220146	..SEAL	1
14	PAOZZ	30308	PL24693C50	..SCREW, MACHINE	2
15	PAOOO	0DT23	47085	..LEVER ASSY	1
16	XBOZZ	0DT23	220204	...SCREW, MACHINE	1
17	XBOZZ	0DT23	220145	...SPRING, DETENT	1
18	XBOZZ	0DT23	220142	...GRIP, VALVE OPERATIN	1
19	XBOZZ	0DT23	220147	...ARM, TORQUE	1
20	XBOZZ	0DT23	220154	..SHAFT	1
21	PCOZZ	96906	MS29513-14	..PACKING, PREFORMED	2
22	PAOZZ	74197	W0367-006-S	..WASHER, WAVE SPRING	1
23	PAOZZ	0DT23	220150	..PIN, STOP	1
24	XBOZZ	0DT23	220152	..BALL	1
25	XBOZZ	0DT23	220158	..SEAL, BALL, DOWNSTREA	1
26	PCOZZ	96906	MS29513-134	..PACKING, PREFORMED	1
27	PAOZZ	0DT23	GF16997-24L	..SCREW, CAP	1
28	XBOZZ	0DT23	220151	..PIN, LOCKOUT	1
29	PAOZZ	0DT23	220149	..SPRING, PIN	1
30	PAOZZ	0DT23	220161	..BUMPER	1
31	XBOZZ	0DT23	220163-1	..BODY, VALVE	1
32	PBOZZ	0DT23	220124	.CAMLOCK, MALE	1
	KFOZZ	0DT23	47053	KIT, COUPLER/ADAPTER	1
				BALL (41) 11-8	
				PACKING, PREFORMED (1) 11-7	
				PACKING, PREFORMED (1) 11-10	
				PACKING, PREFORMED (1) 11-12	
				SCREW, MACHINE (1) 11-6	
				SPRING, SEAL LOADING (8) 11-11	

END OF FIGURE

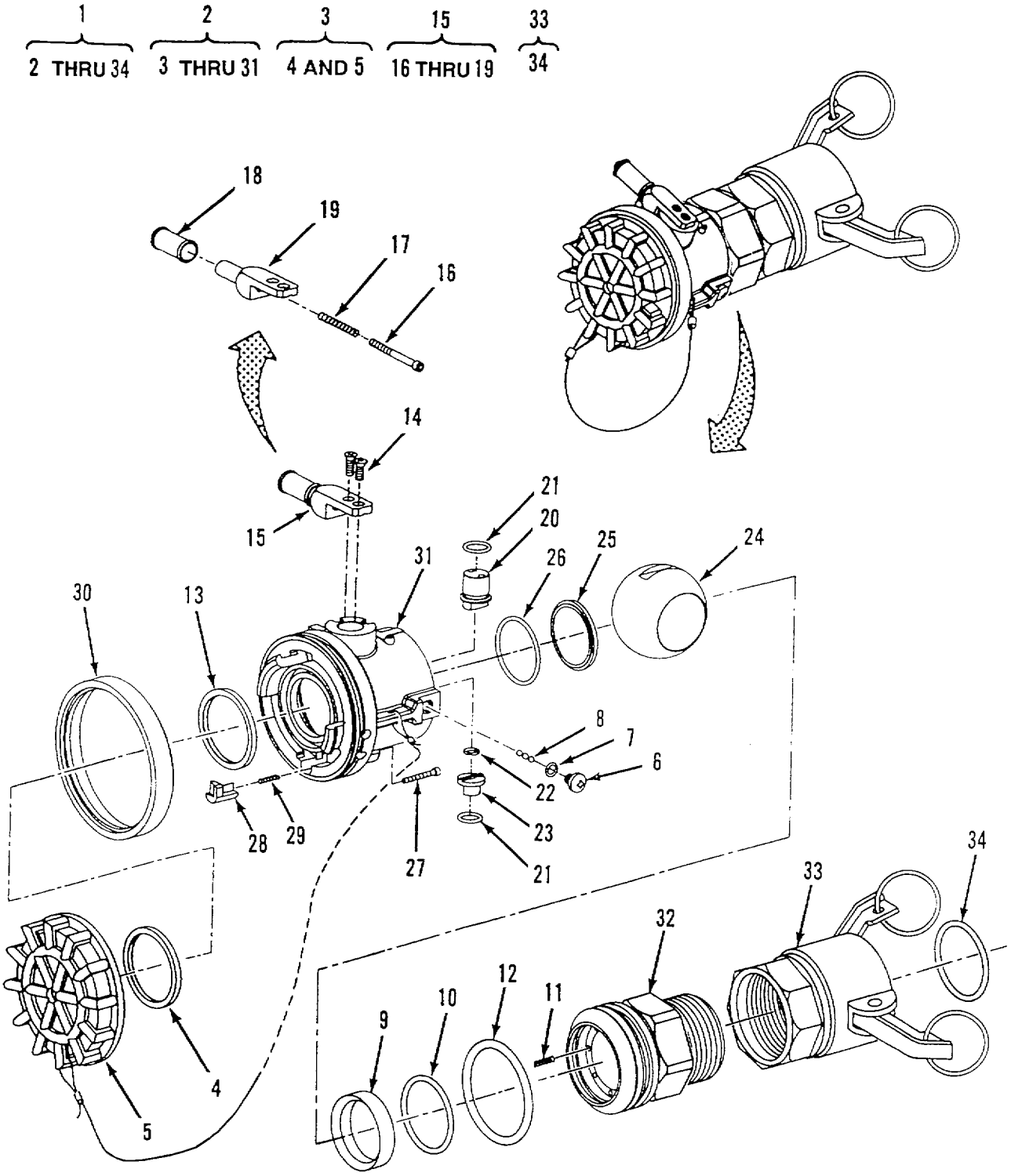

Figure C-12. Valve Assembly, Camlock

(1) ITEM NO	(2) SMR CODE	(3) CAGEC	(4) PART NUMBER	(5) DESCRIPTION AND USABLE ON CODES (UOC)	(6) QTY
				GROUP 09 ADAPTERS	
				FIG. C-12 VALVE ASSEMBLY, CAMLOCK	
1	XBOOO	0DT23	64020G	VALVE ASSY, CAMLOCK	2
2	XBOOO	0DT23	47031-1	.COUPLING ASSY, UNISE	1
3	PBOOO	0DT23	47062	..CAP ASSY	1
4	PCOZZ	0DT23	220146	...SEAL	1
5	PAOZZ	0DT23	220162	...CAP	1
6	PAOZZ	96906	MS35206-276	..SCREW, MACHINE PART OF KIT P/N 47053	1
7	PCOZZ	96906	MS29513-010	..PACKING, PREFORMED PART OF KIT P/N 47053	1
8	XBOZZ	0DT23	220265	..BALL PART OF KIT P/N 47053	41
9	XBOZZ	0DT23	220157	..SEAL, BALL, UPSTREAM PART OF KIT P/N 47053	1
10	PCOZZ	96906	MS29513-133	..PACKING, PREFORMED PART OF KIT P/N 47053	1
11	XBOZZ	0DT23	220153	..SPRING, SEAL LOADING PART OF KIT P/N 47053	8
12	PCOZZ	96906	MS29513-227	..PACKING, PREFORMED PART OF KIT P/N 47053	1
13	PCOZZ	0DT23	220146	..SEAL	1
14	PAOZZ	30308	PL24693C50	..SCREW, MACHINE	2
15	PAOOO	0DT23	47085	..LEVER ASSY	1
16	XBOZZ	0DT23	220204	...SCREW, MACHINE	1
17	XBOZZ	0DT23	220145	...SPRING, DETENT	1
18	XBOZZ	0DT23	220142	...GRIP, VALVE OPERATIN	1
19	XBOZZ	0DT23	220147	...ARM, TORQUE	1
20	XBOZZ	0DT23	220154	..SHAFT	1
21	PCOZZ	96906	MS29513-14	..PACKING, PREFORMED	2
22	PAOZZ	74197	W0367-006-S	..WASHER, WAVE SPRING	1
23	PAOZZ	0DT23	220150	..PIN, STOP	1
24	XBOZZ	0DT23	220152	..BALL	1
25	XBOZZ	0DT23	220158	..SEAL, BALL, DOWNSTREA	1
26	PCOZZ	96906	MS29513-134	..PACKING, PREFORMED	1
27	PAOZZ	0DT23	GF16997-24L	..SCREW, CAP	1
28	XBOZZ	0DT23	220151	..PIN, LOOKOUT	1
29	PAOZZ	0DT23	220149	..SPRING, PIN	1
30	PAOZZ	0DT23	220161	..BUMPER	1
31	XBOZZ	0DT23	220163-1	..BODY, VALVE	1
32	PBOZZ	0DT23	220132	.FITTING, MALE 2 INCH NPT	1
33	PBOOO	80691	20D-AL	.CAMLOCK, FEMALE	1
34	PCOZZ	96906	MS27030-6	..GASKET	1
	KFOZZ	0DT23	47053	KIT, COUPLER/ADAPTER	1
				BALL (41) 12-8	
				PACKING, PREFORMED (1) 12-7	
				PACKING, PREFORMED (1) 12-10	
				PACKING, PREFORMED (1) 12-12	
				SCREW, MACHINE (1) 12-6	
				SEAL, BALL, UPSTREAM (1) 12-9	
				SPRING, SEAL LOADING (8) 12-11	

END OF FIGURE

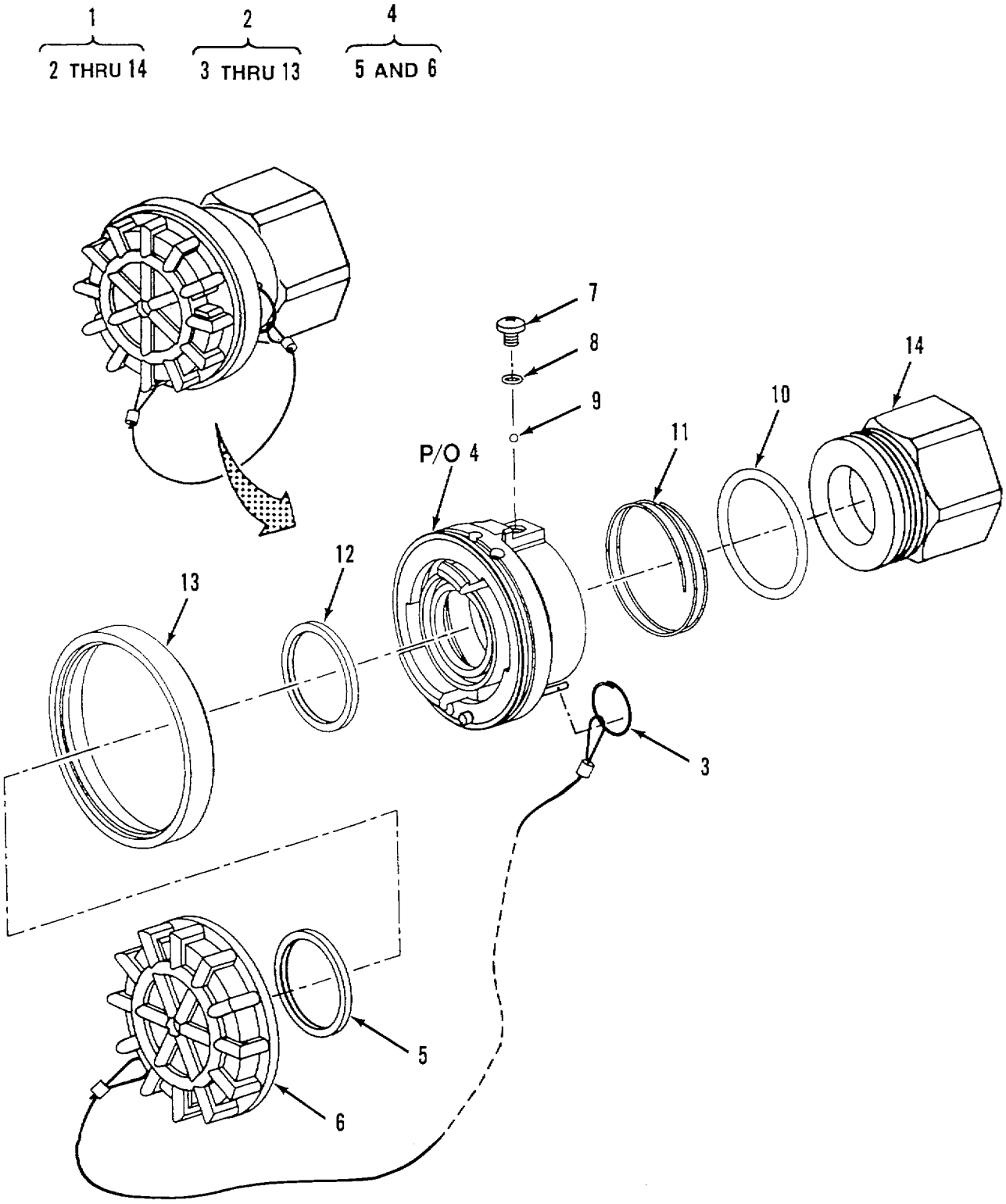

Figure C-13. Coupling Assembly

(1) ITEM NO	(2) SMR CODE	(3) CAGEC	(4) PART NUMBER	(5) DESCRIPTION AND USABLE ON CODES (UOC)	(6) QTY
				GROUP 09 ADAPTERS	
				FIG. C-13 COUPLING ASSEMBLY	
1	XBOOO	0DT23	64019R	COUPLING ASSY FEMALE, 1 1/2 NPT	2
2	PAOOO	0DT23	47032-1	.COUPLING ASSY, UNISE	1
3	PAOZZ	13348	8K1	..RING, WIRE	1
4	PBOOO	0DT23	47062	..CAP ASSY	1
5	PCOZZ	0DT23	220146	...SEAL	1
6	PAOZZ	0DT23	220162	...CAP	1
7	PAOZZ	96906	MS35206-276	..SCREW, MACHINE PART OF KIT P/N 47033	1
8	PCOZZ	96906	MS29513-010	..PACKING, PREFORMED PART OF KIT P/N 47033	1
9	XBOZZ	0DT23	220265	..BALL PART OF KIT P/N 47033	41
10	PCOZZ	96906	MS29513-227	..PACKING, PREFORMED PART OF KIT P/N 47033	1
11	XBOZZ	0DT23	220330	..SPRING, BONDING PART OF KIT P/N 47033	1
12	PCOZZ	0DT23	220146	..SEAL	1
13	PAOZZ	0DT23	220161	..BUMPER	1
14	PBOZZ	0DT23	220138-1	.FITTING, FEMALE	1
	KFOZZ	0DT23	47033	KIT, COUPLER/ADAPTER	1
				BALL (41) 13-9	
				PACKING, PREFORMED (1) 13-8	
				PACKING, PREFORMED (1) 13-10	
				SCREW, MACHINE (1) 13-7	
				SPRING, BONDING (1) 13-11	

END OF FIGURE

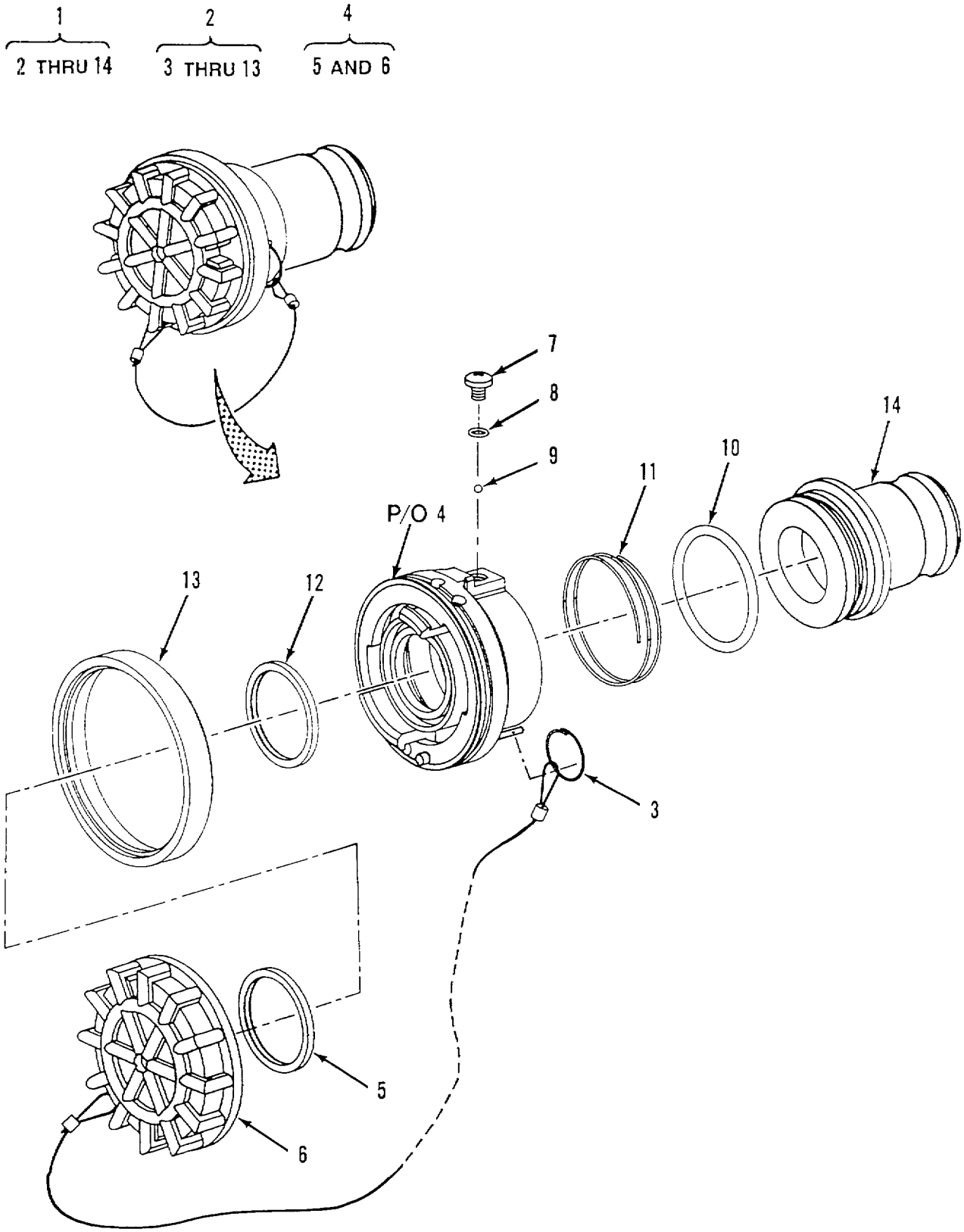

Figure C-14. Coupling Assembly, Male

(1) ITEM NO	(2) SMR CODE	(3) CAGEC	(4) PART NUMBER	(5) DESCRIPTION AND USABLE ON CODES (UOC)	(6) QTY
				GROUP 09 ADAPTERS	
				FIG. C-14 COUPLING ASSEMBLY, MALE	
1	XBOOO	0DT23	64019F	COUPLING ASSY, MALE	2
2	PAOOO	0DT23	47032-1	.COUPLING ASSY, UNISE	1
3	PAOZZ	13348	8K1	..RING, WIRE	1
4	PBOOO	0DT23	47062	..CAP ASSY	1
5	PCOZZ	0DT23	220146	...SEAL	1
6	PAOZZ	0DT23	220162	...CAP	1
7	PAOZZ	96906	MS35206-276	..SCREW, MACHINE PART OF KIT P/N 47033	1
8	PCOZZ	96906	MS29513-010	..PACKING, PREFORMED PART OF KIT P/N 47033	1
9	XBOZZ	0DT23	220265	..BALL PART OF KIT P/N 47033	41
10	PCOZZ	96906	MS29513-227	..PACKING, PREFORMED PART OF KIT P/N 47033	1
11	XBOZZ	0DT23	220330	..SPRING, BONDING PART OF KIT P/N 47033	1
12	PCOZZ	0DT23	220146	..SEAL	1
13	PAOZZ	0DT23	220161	..BUMPER	1
14	PBOZZ	0DT23	220140-1	.FITTING, MALE	1
	KFOZZ	0DT23	47033	KIT, COUPLER/ADAPTER	1
				BALL (41) 14-9	
				PACKING, PREFORMED (1) 14-8	
				PACKING, PREFORMED (1) 14-10	
				SCREW, MACHINE (1) 14-7	
				SPRING, BONDING (1) 14-11	

END OF FIGURE

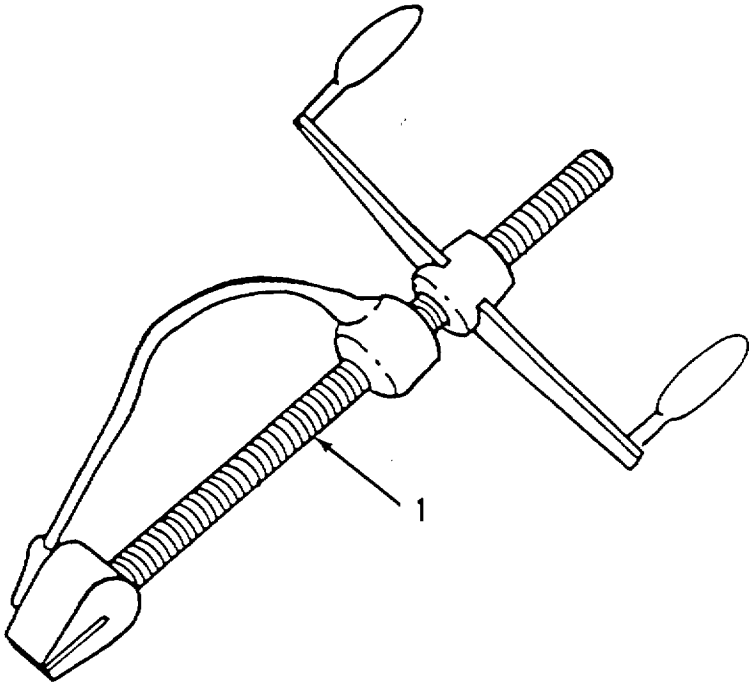

Figure C-15. Special Tools

(1) ITEM NO	(2) SMR CODE	(3) CAGEC	(4) PART NUMBER	(5) DESCRIPTION AND USABLE ON CODES (UOC)	(6) QTY
				GROUP 10 SPECIAL TOOLS	
				FIG. C-15 SPECIAL TOOLS	
1	PAOZZ	81348	GGG-C-00413	CLAMPING TOOL, STRAP	

END OF FIGURE

CROSS-REFERENCE INDEXES

NATIONAL STOCK NUMBER INDEX

STOCK NUMBER	FIG.	ITEM
5310-00-020-3260	3	16
5310-00-020-3260	3A	21
5306-00-021-3912	3	18
5306-00-021-3912	3A	23
5330-00-088-9166	9	40
5310-00-141-1795	3	26
5310-00-141-1795	4	12
5310-00-141-1795	3A	62
5306-00-151-1421	3	27
5306-00-151-1421	4	13
5306-00-151-1421	3A	63
5360-00-155-5099	3	63
5360-00-155-5099	4	52
5360-00-155-5099	3A	88
5310-00-167-0803	3	17
5310-00-167-0803	3A	22
5310-00-167-0820	3	23
5310-00-167-0820	4	9
5310-00-167-0820	3A	59
4010-00-171-4512	9	43
5315-00-234-1864	3	43
5315-00-234-1864	4	32
5315-00-234-1864	3A	69
5330-00-248-3835	3	9
5330-00-248-3835	6	10
5330-00-248-3835	7	8
5330-00-248-3835	8	7
5330-00-248-3835	9	10
5330-00-248-3835	11	7
5330-00-248-3835	12	7
5330-00-248-3835	13	8
5330-00-248-3835	14	8
5330-00-248-3835	3A	10
5330-00-248-3835	7A	8
5330-00-248-3835	11A	8
5330-00-248-3838	3	31
5330-00-248-3838	4	21
5330-00-248-3838	3A	78
5330-00-248-3840	6	24
5330-00-248-3840	8	21
5330-00-248-3840	9	24
5330-00-248-3840	11	21
5330-00-248-3840	12	21
5330-00-248-3840	7A	22
5330-00-248-3840	11A	22
5330-00-252-6050	4	19
5330-00-260-9338	3	11
5330-00-260-9338	6	15
5330-00-260-9338	7	10
5330-00-260-9338	8	12
5330-00-260-9338	9	15
5330-00-260-9338	11	12
5330-00-260-9338	12	12
5330-00-260-9338	13	10
5330-00-260-9338	14	10
5330-00-260-9338	3A	12
5330-00-260-9338	7A	13
5330-00-260-9338	11A	13
5330-00-263-8011	3A	55
5330-00-265-1076	3A	46
5120-00-278-9925	15	1
5330-00-279-9410	3	66
5330-00-279-9410	4	55
5330-00-279-9410	3A	89
DELETED	5	
5330-00-291-7384	6	13
5330-00-291-7384	8	10
5330-00-291-7384	9	13
5330-00-291-7384	11	10
5330-00-291-7384	12	10
5330-00-291-7384	7A	11
5330-00-291-7384	11A	11

CROSS-REFERENCE INDEXES

NATIONAL STOCK NUMBER INDEX

STOCK NUMBER	FIG.	ITEM
5310-00-515-8058	3A	40
5330-00-531-4588	3A	38
5330-00-612-2414	12	34
5365-00-613-8997	3A	31
5330-00-641-0119	6	29
5330-00-641-0119	8	26
5330-00-641-0119	9	29
5330-00-641-0119	11	26
5330-00-641-0119	12	26
5330-00-641-0119	7A	27
5330-00-641-0119	11A	27
5310-00-721-4434	3	51
5310-00-721-4434	4	41
5310-00-721-4434	3A	80
5310-00-807-1468	3	25
5310-00-807-1468	4	11
5310-00-807-1468	3A	61
5310-00-807-1468	3	64
5330-00-833-4210	4	53
5330-00-833-4210	3A	75
4930-00-848-1310	3	44
4930-00-848-1310	4	33
4930-00-848-1310	3A	70
5365-00-926-5411	9	42
4730-00-929-0790	9	41
3110-00-965-8485	3A	43
5305-00-988-1720	3	8
5305-00-988-1720	6	9
5305-00-988-1720	7	7
5305-00-988-1720	8	6
5305-00-988-1720	9	9
5305-00-988-1720	11	6
5305-00-988-1720	12	6
5305-00-988-1720	13	7
5305-00-988-1720	14	7
5305-00-988-1720	3A	9
5305-00-988-1720	7A	7
5305-00-988-1720	11A	7
5330-01-007-4899	3	34
5330-01-007-4899	4	26
5330-01-007-4899	3A	52
5330-01-007-4899	3A	90
5315-01-025-4510	3	50
5315-01-025-4510	4	40
5315-01-025-4510	3A	79
5975-01-050-5707	10	1
4930-01-053-0185	3A	34
5365-01-053-0186	3A	48
4930-01-053-0187	3A	37
4930-01-053-0188	3A	36
4930-01-053-0189	3A	41
4930-01-053-0190	3A	35
5340-01-053-0192	3	58
5340-01-053-0192	4	47
5340-01-053-0192	3A	93
5315-01-053-0194	3	61
5315-01-053-0194	4	50
5315-01-053-0194	3A	86
5330-01-053-0217	3	19
5330-01-053-0217	3A	24
5330-01-053-0221	3A	47
5305-01-189-3761	3	22
5305-01-189-3761	4	8
5305-01-189-3761	3A	58
5935-01-190-7485	4	23
5330-01-244-2274	3	37
5330-01-244-2274	4	25
5330-01-244-2274	3A	27
5330-01-244-2274	3A	50
4730-01-244-7275	9	3
4930-01-244-8043	3	67

CROSS-REFERENCE INDEXES

NATIONAL STOCK NUMBER INDEX

STOCK NUMBER	FIG.	ITEM
4930-01-244-8043	4	56
4930-01-244-8043	3A	91
5360-01-246-2501	3	33
5360-01-246-2501	4	27
5360-01-246-2501	3A	51
5360-01-246-2501	3A	68
5340-01-246-2706	3	29
5340-01-246-2706	4	15
5340-01-246-2707	3A	65
5305-01-246-3868	3	30
5305-01-246-3868	3	41
5305-01-246-3868	4	20
5305-01-246-3868	4	30
5305-01-246-3868	3A	66
5305-01-246-3868	3A	77
5330-01-246-7351	3	65
5330-01-246-7351	4	54
5330-01-246-7351	3A	76
3110-01-247-1056	3	32
3110-01-247-1056	3	42
3110-01-247-1056	4	22
3110-01-247-1056	4	31
3110-01-247-1056	3A	56
3110-01-247-1056	3A	67
5330-01-247-1080	3	36
5330-01-247-1080	4	24
5330-01-247-1080	3A	28
5330-01-247-1080	3A	49
4930-01-653-3145	3A	29
5310-01-259-7783	6	25
5310-01-259-7783	8	22
5310-01-259-7783	9	25
5310-01-259-7783	11	22
5310-01-259-7783	12	22
5310-01-259-7783	7A	23
5310-01-259-7783	11A	23
5330-01-264-0134	3	60
5330-01-264-0134	4	49
5330-01-264-0134	3A	95
4930-01-265-3145	3	35
4930-01-265-3145	3	38
4930-01-265-3145	3A	26
4730-01-296-9462	14	1
4730-01-296-9463	6	4
4930-01-297-3776	4	1
4930-01-297-3777	3	1
4730-01-297-6812	8	1
4730-01-298-0150	12	1
4730-01-298-0151	11	1
5340-01-324-0954	3	24
5340-01-324-0954	4	10
5340-01-324-0954	3A	60
5360-01-338-0240	3A	44
4820-01-338-1885	3	
4820-01-338-1885	4	
5330-01-338-6641	3A	
5315-01-341-8766	3	54
5315-01-341-8766	4	38
5315-01-341-8766	3A	83
4930-01-383-9467	2	1
4930-01-383-9467	3	59
3110-01-385-3438	4	48
3110-01-385-3438	3A	94
5315-01-385-5535	3	62
5315-01-385-5535	4	51
5315-01-385-5535	3A	87
4820-01-385-8907	3	46
4820-01-385-8907	4	35
4820-01-385-8907	3A	71
3040-01-385-8986	3	56
3040-01-385-8986	4	45
3040-01-385-8986	3A	85

CROSS-REFERENCE INDEXES

NATIONAL STOCK NUMBER INDEX

STOCK NUMBER	FIG.	ITEM
3040-01-385-9064	3	48
3040-01-385-9064	4	37
3040-01-385-9064	3A	74
4930-01-385-9453	3	68
4930-01-385-9453	4	57
4930-01-385-9453	3A	97
4930-01-385-9488	3	57
4930-01-385-9488	4	46
4930-01-385-9488	3A	92
5305-01-413-0746	3	47
5305-01-413-0746	4	36
5305-01-413-0746	3A	73
5315-01-413-0747	3	52
5315-01-413-0747	4	42
5315-01-413-0747	3A	81
4730-01-413-2614	3	39
4730-01-413-2614	4	28
4730-01-413-2614	3A	72
4320-01-413-4038	3	49
4320-01-413-4038	3	53
4320-01-413-4038	4	39
4320-01-413-4038	4	43
4320-01-413-4038	3A	82
5340-01-413-6109	3	21
5340-01-413-6109	4	7
5340-01-415-1292	3	28
5340-01-415-1292	4	14
5340-01-415-1292	3A	64

CROSS-REFERENCE INDEXES

PART NUMBER INDEX

CAGEC	PART NUMBER	STOCK NUMBER	FIG	ITEM
88044	AN320C4	5310-00-721-4434	3	51
88044	AN320C4	5310-00-721-4434	4	41
88044	AN320C4	5310-00-721-4434	3A	80
88044	AN4-13A	5306-00-151-1421	3	27
88044	AN4-13A	5306-00-151-1421	4	13
88044	AN4-13A	5306-00-151-1421	3A	63
88044	AN960-416	5310-00-141-1795	3	26
88044	AN960-416	5310-00-141-1795	4	12
88044	AN960-416	5310-00-141-1795	3A	62
96906	AN960-516	5310-00-167-0820	3	23
96906	AN960-516	5310-00-167-0820	4	9
96906	AN960-516	5310-00-167-0820	3A	59
88044	AN960-8	5310-00-515-8058	3A	40
88044	AN960C516	5310-00-167-0803	3	17
88044	AN960C516	5310-00-167-0803	3A	22
OWDUI	CPFH32DMIL50		6	36
OWSDI	CPFH48DMIL50		9	44
0DT23	D9-437	5315-01-3418766	3	54
0DT23	D9-437	5315-01-3418766	4	38
0DT23	D9-437	5315-01-3418766	3A	83
0DT23	GF16997-24L		6	30
0DT23	GF16997-24L		8	27
0DT23	GF16997-24L		9	30
0DT23	GF16997-24L		11	27
0DT23	GF16997-24L		12	27
0DT23	GF16997-24L		7A	28
0DT23	GF16997-24L		11A	28
81348	GGG-C-00413	5120-00-278-9925	15	1
81718	H01434M	5365-00-926-5411	9	42
90598	HTARS101	4930-01-435-9019		
70847	J212		6	3
70847	J213	4730-01-244-7275	9	3
0DT23	KD61428-5	5330-01-338-6641	3A	
0DT23	KD64019-5		3A	
0DT23	KD64020-2		11A	

CROSS-REFERENCE INDEXES

PART NUMBER INDEX

CAGEC	PART NUMBER	STOCK NUMBER	FIG	ITEM
0DT23	KD64349-1		3A	
0DT23	KD64349-2		3A	
0DT23	LP515-8R7		3A	39
0DT23	LP526C1024R8		3A	32
0DT23	LP65U82J12M	5305-01-413-0746	3	47
0DT23	LP65U82J12M	5305-01-413-0746	4	36
0DT23	LP65U82J12M	5305-01-413-0746	3A	73
81349	M25988/1-040	5330-01-244-2274	3	37
81349	M25988/1-040	5330-01-244-2274	4	25
81349	M25988/1-040	5330-01-244-2274	3A	27
81349	M25988/1-040	5330-01-244-2274	3A	50
81349	M25988/1-145	5330-00-279-9410	3	66
81349	M25988/1-145	5330-00-279-9410	4	55
81349	M25988/1-145	5330-00-279-9410	3A	89
81349	M25988/1-235	5330-01-007-4899	3	34
81349	M25988/1-235	5330-01-007-4899	4	26
81349	M25988/1-235	5330-01-007-4899	3A	52
81349	M25988/1-235	5330-01-007-4899	3A	90
90598	MFG 0672-1		9	1
90598	MFG 0672-3		6	1
90598	MFG-1		6	2
90598	MFG-2		9	2
90598	MFG0673		6	37
90598	MFG0673		9	45
96906	MS16997-78L	5305-01-189-3761	3	22
96906	MS16997-78L	5305-01-189-3761	4	8
96906	MS16997-78L	5305-01-189-3761	3A	58
96906	MS19060-1012	3110-00-965-8485	3A	43
96906	MS21042-4	5310-00-807-1468	3	25
96906	MS21042-4	5310-00-807-1468	4	11
96906	MS21042-4	5310-00-807-1468	3A	61
96906	MS21083C5	5310-00-020-3260	3	16
96906	MS21083C5	5310-00-020-3260	3A	21
96906	MS24665-1013	5315-01-025-4510	3	50

CROSS-REFERENCE INDEXES

PART NUMBER INDEX

CAGEC	PART NUMBER	STOCK NUMBER	FIG	ITEM
96906	MS24665-1013	5315-01-025-4510	4	40
96906	MS24665-1013	5315-01-025-4510	3A	79
96906	MS24665-302	5315-00-234-1864	3	43
96906	MS24665-302	5315-00-234-1864	4	32
96906	MS24665-302	5315-00-234-1864	3A	69
96906	MS27029-15	4730-00-929-0790	9	41
96906	MS27030-6	5330-00-612-2414	12	34
96906	MS27030-8	5330-00-088-9166	9	40
96906	MS28774-017	5330-00-833-4210	3	64
96906	MS28774-017	5330-00-833-4210	4	53
96906	MS28774-017	5330-00-833-4210	3A	75
96906	MS29512-03	5330-00-263-8011	3A	55
96906	MS29513-010	5330-00-248-3835	3	9
96906	MS29513-010	5330-00-248-3835	6	10
96906	MS29513-010	5330-00-248-3835	7	8
96906	MS29513-010	5330-00-248-3835	8	7
96906	MS29513-010	5330-00-248-3835	9	10
96906	MS29513-010	5330-00-248-3835	11	7
96906	MS29513-010	5330-00-248-3835	12	7
96906	MS29513-010	5330-00-248-3835	13	8
96906	MS29513-010	5330-00-248-3835	14	8
96906	MS29513-010	5330-00-248-3835	3A	10
96906	MS29513-010	5330-00-248-3835	7A	8
96906	MS29513-010	5330-00-248-3835	11A	8
96906	MS29513-013	5330-00-248-3835	3	31
96906	MS29513-013	5330-00-248-3838	4	21
96906	MS29513-013	5330-00-248-3838	3A	78
96906	MS29513-14	5330-00-248-3840	6	24
96906	MS29513-14	5330-00-248-3840	8	21
96906	MS29513-14	5330-00-248-3840	9	24
96906	MS29513-14	5330-00-248-3840	11	21
96906	MS29513-14	5330-00-248-3840	12	21
96906	MS29513-14	5330-00-248-3840	7A	22
96906	MS29513-14	5330-00-248-3840	11A	22

CROSS-REFERENCE INDEXES

PART NUMBER INDEX

CAGEC	PART NUMBER	STOCK NUMBER	FIG	ITEM
96906	MS29513-126	5330-00-265-1076	3A	46
96906	MS29513-133	5330-00-291-7384	6	13
96906	MS29513-133	5330-00-291-7384	8	10
96906	MS29513-133	5330-00-291-7384	9	13
96906	MS29513-133	5330-00-291-7384	11	10
96906	MS29513-133	5330-00-291-7384	12	10
96906	MS29513-133	5330-00-291-7384	7A	11
96906	MS29513-133	5330-00-291-7384	11A	11
96906	MS29513-134	5330-00-641-0119	6	29
96906	MS29513-134	5330-00-641-0119	8	26
96906	MS29513-134	5330-00-641-0119	9	29
96906	MS29513-134	5330-00-641-0119	11	26
96906	MS29513-134	5330-00-641-0119	12	26
96906	MS29513-134	5330-00-641-0119	7A	27
96906	MS29513-134	5330-00-641-0119	11A	27
96906	MS29513-138	5330-00-252-6050	4	19
96906	MS29513-147	5330-00-531-4588	3A	38
96906	MS29513-227	5330-00-260-9338	3	11
96906	MS29513-227	5330-00-260-9338	6	15
96906	MS29513-227	5330-00-260-9338	7	10
96906	MS29513-227	5330-00-260-9338	8	12
96906	MS29513-227	5330-00-260-9338	9	15
96906	MS29513-227	5330-00-260-9338	11	12
96906	MS29513-227	5330-00-260-9338	12	12
96906	MS29513-227	5330-00-260-9338	13	10
96906	MS29513-227	5330-00-260-9338	14	10
96906	MS29513-227	5330-00-260-9338	3A	12
96906	MS29513-227	5330-00-260-9338	7A	13
96906	MS29513-227	5330-00-260-9338	11A	13
DELETED			5	
96906	MS35206-276	5305-00-988-1720	3	8
96906	MS35206-276	5305-00-988-1720	6	9
96906	MS35206-276	5305-00-988-1720	7	7
96906	MS35206-276	5305-00-988-1720	8	6
96906	MS35206-276	5305-00-988-1720	9	9

CROSS-REFERENCE INDEXES

PART NUMBER INDEX

CAGEC	PART NUMBER	STOCK NUMBER	FIG	ITEM
96906	MS35206-276	5305-00-988-1720	12	6
96906	MS35206-276	5305-00-988-1720	11	6
96906	MS35206-276	5305-00-988-1720	13	7
96906	MS35206-276	5305-00-988-1720	14	7
96906	MS35206-276	5305-00-988-1720	3A	9
96906	MS35206-276	5305-00-988-1720	7A	7
96906	MS35206-276	5305-00-988-1720	11A	7
96906	MS35308-334	5306-00-021-3912	3	18
96906	MS35308-334	5306-00-021-3912	3A	23
30308	PL24693C50		6	17
30308	PL24693C50		8	14
30308	PL24693C50		9	17
30308	PL24693C50		11	14
30308	PL24693C50		12	14
30308	PL24693C50		7A	15
30308	PL24693C50		11A	15
80244	RR-C-271 TY2CL3	4010-00-171-4512	9	43
0DT23	RRT-268S	5365-00-613-8997	3A	31
DELETED			5	
74197	W0367-00-6-S	5310-01-259-7783	6	25
74197	W0367-00-6-S	5310-01-259-7783	8	22
74197	W0367-00-6-S	5310-01-259-7783	9	25
74197	W0367-00-6-S	5310-01-259-7783	11	22
74197	W0367-00-6-S	5310-01-259-7783	12	22
77535	W0367-00-6-S	5310-01-259-7783	7A	23
77535	W0367-00-6-S	5310-01-259-7783	11A	23
1GX11	00-1-5404		4	5
1GX11	00-5-5406		4	6
97403	13219E0462	5975-01-050-5707	10	1
0DT23	200-484		3A	54
0DT23	201201-151	5330-01-053-0217	3	19
0DT23	201201-151	5330-01-053-0217	3A	24
0DT23	207783	4320-01-413-4038	3	53
0DT23	207783	4320-01-413-4038	4	43

CROSS-REFERENCE INDEXES

PART NUMBER INDEX

CAGEC	PART NUMBER	STOCK NUMBER	FIG	ITEM
0DT23	207783	4320-01-413-4038	3A	82
96906	MS35206-276	5305-00-988-1720	9	9
0DT23	207784	4930-01-244-8043	3	67
0DT23	207784	4930-01-244-8043	4	56
0DT23	207784	4930-01-244-8043	3A	91
0DT23	207788	5315-01-413-0747	3	52
0DT23	207788	5315-01-413-0747	4	42
0DT23	207788	5315-01-413-0747	3A	81
0DT23	207792	5330-01-246-7351	3	65
0DT23	207792	5330-01-246-7351	4	54
0DT23	207792	5330-01-246-7351	3A	76
0DT23	207795		3	55
0DT23	207795		4	44
0DT23	207795		3A	84
0DT23	207799	5340-01-246-2706	3	29
0DT23	207799	5340-01-246-2706	4	15
0DT23	207799	5340-01-246-2707	3A	65
0DT23	207807	5330-01-247-1080	3	36
0DT23	207807	5330-01-247-1080	4	24
0DT23	207807	5330-01-247-1080	3A	28
0DT23	207807	5330-01-247-1080	3A	49
0DT23	207873	4930-01-653-3145	3A	29
0DT23	207808	5340-01-324-0954	3	24
0DT23	207808	5340-01-324-0954	4	10
0DT23	207808	5340-01-324-0954	3A	60
0DT23	207873	4930-01-265-3145	3	38
0DT23	209029	5330-01-264-0134	3	60
0DT23	209029	5330-01-264-0134	4	49
0DT23	209029	5330-01-264-0134	3A	95
0DT23	20909	5360-00-155-5099	3	63
0DT23	20909	5360-00-155-5099	4	52
0DT23	20909	5360-00-155-5099	3A	88
0DT23	209793		3A	57
0DT23	209827	5305-01-246-3868	3	30

CROSS-REFERENCE INDEXES

PART NUMBER INDEX

CAGEC	PART NUMBER	STOCK NUMBER	FIG	ITEM
0DT23	209827	5305-01-246-3868	3	41
0DT23	209827	5305-01-246-3868	3A	66
0DT23	209827	5305-01-246-3868	3A	77
0DT23	209827	5305-01-246-3868	4	20
0DT23	209827	5305-01-246-3868	4	30
0DT23	209853	5360-01-246-2501	3	33
0DT23	209853	5360-01-246-2501	4	27
0DT23	209853	5360-01-246-2501	3A	51
0DT23	209853	5360-01-246-2501	3A	68
80691	20D-AL		12	33
0DT23	210-0224-100		4	2
0DT23	210189	5360-01-338-0240	3A	44
0DT23	210368	3040-01-385-8986	3	56
0DT23	210368	3040-01-385-8986	4	45
0DT23	210368	3040-01-385-8986	3A	85
0DT23	210388	4730-01-413-2614	3	39
0DT23	210388	4730-01-413-2614	4	28
0DT23	210388	4730-01-413-2614	3A	72
0DT23	210593	4820-01-385-8907	3	46
0DT23	210593	4820-01-385-8907	4	35
0DT23	210593	4820-01-385-8907	3A	71
0DT23	210600	5340-01-415-1292	3	28
0DT23	210600	5340-01-415-1292	4	14
0DT23	210600	5340-01-415-1292	3A	64
0DT23	220124		11	32
0DT23	220129		9	35
0DT23	2201-30		6	35
0DT23	220132		12	32
0DT23	220138-1		13	14
0DT23	220138-1		11A	33
0DT23	220140-1		14	14
0DT23	220142		6	21
0DT23	220142		9	21
0DT23	220142		11	18

CROSS-REFERENCE INDEXES

PART NUMBER INDEX

CAGEC	PART NUMBER	STOCK NUMBER	FIG	ITEM
0DT23	220142		12	18
0DT23	220142		7A	19
0DT23	220142		11A	19
0DT23	220145		6	20
0DT23	220145		8	17
0DT23	220145		9	20
0DT23	220145		11	17
0DT23	220145		12	17
0DT23	220145		7A	18
0DT23	220145		11A	18
0DT23	220146		3	6
0DT23	220146		3	13
DELETED				
DELETED				
0DT23	220146		6	7
0DT23	220146		6	16
0DT23	220146		7	5
0DT23	220146		7	12
0DT23	220146		8	4
0DT23	220146		8	13
0DT23	220146		9	7
0DT23	220146		9	16
0DT23	220146		11	4
0DT23	220146		11	13
0DT23	220146		12	4
0DT23	220146		12	13
0DT23	220146		13	5
0DT23	220146		13	12
0DT23	220146		14	5
0DT23	220146		14	12
0DT23	220146		3A	7
0DT23	220146		3A	17
0DT23	220146		7A	5
0DT23	220146		7A	14

CROSS-REFERENCE INDEXES

PART NUMBER INDEX

CAGEC	PART NUMBER	STOCK NUMBER	FIG	ITEM
0DT23	220146		11A	5
0DT23	220146		11A	14
0DT23	220153		6	14
0DT23	220153		8	11
0DT23	220147		6	22
0DT23	220147		8	t9
0DT23	220147		9	22
0DT23	220147		1	19
0DT23	220147		12	19
0DT23	220147		7A	20
0DT23	220147		11A	20
0DT23	220149		6	32
0DT23	220149		8	29
0DT23	220149		9	32
0DT23	220149		11	29
0DT23	220149		12	29
0DT23	220149		7A	30
0DT23	220149		11A	30
0DT23	220150		6	26
0DT23	220150		8	23
0DT23	220150		9	26
0DT23	220150		11	23
0DT23	220150		12	23
0DT23	220150		7A	24
0DT23	220150		11A	24
0DT23	220151		6	31
0DT23	220151		8	28
0DT23	220151		9	31
0DT23	220151		11	28
0DT23	220151		12	28
0DT23	220151		7A	29
0DT23	220151		11A	29
0DT23	220152		6	27
0DT23	220152		8	24

CROSS-REFERENCE INDEXES

PART NUMBER INDEX

CAGEC	PART NUMBER	STOCK NUMBER	FIG	ITEM
0DT23	220152		9	27
0DT23	220152		11	24
0DT23	220152		12	24
0DT23	220152		7A	25
0DT23	220152		11A	25
0DT23	220153		9	14
0DT23	220153		11	11
0DT23	220153		12	11
0DT23	220153		7A	12
0DT23	220153		11A	12
0DT23	220154		6	23
0DT23	220154		8	20
0DT23	220154		9	23
0DT23	220154		11	20
0DT23	220154		12	20
0DT23	220154		7A	21
0DT23	220154		11A	21
0DT23	220157		6	12
0DT23	220157		8	9
0DT23	220157		9	12
0DT23	220157		11	9
0DT23	220157		12	9
0DT23	220157		7A	10
0DT23	220157		11A	10
0DT23	220158		6	28
0DT23	220158		8	25
0DT23	220158		9	28
0DT23	220158		11	25
0DT23	220158		12	25
0DT23	220158		7A	26
0DT23	220158		11A	26
0DT23	220161		3	14
DELETED			5	
0DT23	220161		6	33

CROSS-REFERENCE INDEXES

PART NUMBER INDEX

CAGEC	PART NUMBER	STOCK NUMBER	FIG	ITEM
0DT23	220161		7	13
0DT23	220161		8	30
0DT23	220161		9	33
0DT23	220161		11	30
0DT23	220161		12	30
0DT23	220161		13	13
0DT23	220161		14	13
0DT23	220161		3A	18
0DT23	220161		7A	31
0DT23	220161		11A	31
0DT23	220162		3	7
DELETED			5	
0DT23	220162		6	8
0DT23	220162		7	6
0DT23	220162		8	5
0DT23	220162		9	8
0DT23	220162		11	5
0DT23	220162		12	5
0DT23	220162		13	6
0DT23	220162		14	6
0DT23	220162		3A	8
0DT23	220162		7A	6
0DT23	220162		11A	6
0DT23	220163-1		6	34
0DT23	220163-1		8	31
0DT23	220163-1		9	34
0DT23	220163-1		11	31
0DT23	220163-1		12	31
0DT23	220163-1		7A	32
0DT23	220163-1		11A	32
0DT23	220164-1		3A	19
0DT23	220165-1		8	32
0DT23	220166-1		7A	33
0DT23	220170-1		7	14

CROSS-REFERENCE INDEXES

PART NUMBER INDEX

CAGEC	PART NUMBER	STOCK NUMBER	FIG	ITEM
0DT23	220174-1		3	20
0DT23	220174-1		3A	25
0DT23	220201-1-18		3A	5
0DT23	220204		6	19
0DT23	220204		8	16
0DT23	220204		9	19
0DT23	220204		11	16
0DT23	220204		12	16
0DT23	220204		7A	17
0DT23	220204		11A	17
0DT23	220224-1		4	18
0DT23	220253-1		9	37
DELETED			5	
DELETED			5	
DELETED			5	
0DT23	220265		3	10
0DT23	220265		6	11
0DT23	220265		7	9
0DT23	220265		8	8
0DT23	220265		9	11
0DT23	220265		11	8
0DT23	220265		12	8
0DT23	220265		13	9
0DT23	220265		14	9
0DT23	220265		3A	11
0DT23	220265		7A	9
0DT23	220265		11A	9
0DT23	220269	4930-01-385-9453	3	68
0DT23	220269	4930-01-385-9453	4	57
0DT23	220269	4930-01-385-9453	3A	97
0DT23	220270	3040-01-385-9064	3	48
0DT23	220270	3040-01-385-9064	4	37
0DT23	220270	3040-01-385-9064	3A	74
0DT23	220271	3110-01-385-3438	3	59

CROSS-REFERENCE INDEXES

PART NUMBER INDEX

CAGEC	PART NUMBER	STOCK NUMBER	FIG	ITEM
0DT23	220271	3110-01-385-3438	4	48
0DT23	220271	3110-01-385-3438	3A	94
0DT23	220272	5315-01-385-5535	3	62
0DT23	220272	5315-01-385-5535	4	51
0DT23	220272	5315-01-385-5535	3A	87
0DT23	220277		9	38
0DT23	220330		3	12
0DT23	220330		7	11
0DT23	220330		13	11
0DT23	220330		14	11
0DT23	220330		3A	13
0DT23	2204-86		3A	15
0DT23	220479-100		3A	16
0DT23	220724-007		3A	42
0DT23	220724-229		3A	45
0DT23	23622	4930-00-848-1310	3	44
0DT23	23622	4930-00-848-1310	4	33
0DT23	23622	4930-00-848-1310	3A	70
0DT23	23889	4930-01-053-0190	3A	35
0DT23	23890	4930-01-053-0189	3A	41
0DT23	23892	4930-01-053-0188	3A	36
0DT23	23893	4930-01-053-0187	3A	37
0DT23	24059	5365-01-053-0186	3A	48
0DT23	24085	5330-01-053-0221	3A	47
0DT23	24096	4930-01-053-0185	3A	34
0DT23	24636	5340-01-053-0192	3	58
0DT23	24636	5340-01-053-0192	4	47
0DT23	24636	5340-01-053-0192	3A	93
0DT23	24780	5315-01-053-0194	3	61
0DT23	24780	5315-01-053-0194	4	50
0DT23	24780	5315-01-053-0194	3A	86
0DT23	28-2-G		3A	4
0DT23	2NP-218		4	3
0DT23	3020BAL-TN		9	39

CROSS-REFERENCE INDEXES

PART NUMBER INDEX

CAGEC	PART NUMBER	STOCK NUMBER	FIG	ITEM
0DT23	40427		3A	53
0DT23	44311		3A	96
0DT23	44327	4930-01-265-3145	3	35
0DT23	44327	4930-01-265-3145	3A	26
0DT23	44646-45		3A	30
0DT23	44716	4820-01-338-1885	3	
0DT23	44716	4820-01-338-1885	4	
0DT23	44754	4320-01-413-4038	3	49
0DT23	44754	4320-01-413-4038	4	39
0DT23	44807-1	5340-01-413-6109	3	21
0DT23	44807-1	5340-01-413-6109	4	7
0DT23	47023		3	
0DT23	47031-1		6	5
0DT23	47031-1		8	2
0DT23	47031-1		9	5
0DT23	47031-1		11	2
0DT23	47031-1		12	2
0DT23	47031-1		7A	2
0DT23	47031-1		11A	2
0DT23	47032-1		3	3
0DT23	47032-1		7	2
0DT23	47032-1		13	2
0DT23	47032-1		14	2
0DT23	47033			
0DT23	47033			7
0DT23	47033			13
0DT23	47033			14
0DT23	47037-1		3	15
0DT23	47037-1		3A	20
0DT23	47042	5935-01-190-7485	4	23
0DT23	47053			6
0DT23	47053			8
0DT23	47053			9
0DT23	47053			11
0DT23	47053			12

CROSS-REFERENCE INDEXES

PART NUMBER INDEX

CAGEC	PART NUMBER	STOCK NUMBER	FIG	ITEM
0DT23	47053			7A
0DT23	47055		3	40
0DT23	47055		4	29
0DT23	47056		3	45
0DT23	47056		4	34
0DT23	47058	4930-01-385-9488	3	57
0DT23	47058	4930-01-385-9488	4	46
0DT23	47058	4930-01-385-9488	3A	92
0DT23	47062		3	5
DELETED			5	
0DT23	47062		6	6
0DT23	47062		7	4
0DT23	47062		8	3
0DT23	47062		9	6
0DT23	47062		11	3
0DT23	47062		12	3
0DT23	47062		13	4
0DT23	47062		14	4
0DT23	47062		3A	6
0DT23	47062		7A	4
0DT23	47062		11A	4
0DT23	47069		4	16
0DT23	47085		6	18
0DT23	47085		8	15
0DT23	47085		9	18
0DT23	47085		11	15
0DT23	47085		12	15
0DT23	47085		7A	16
0DT23	47085		11A	16
0DT23	47115-100		3A	14
3A054	4912K66		4	4
0DT23	600-001-10		3A	33
0DT23	64014		1	1
0DT23	64017B	4930-01-383-9467	2	1

CROSS-REFERENCE INDEXES

PART NUMBER INDEX

CAGEC	PART NUMBER	STOCK NUMBER	FIG	ITEM
0DT23	64019F	4730-01-296-9462	14	1
0DT23	64019N		3	2
0DT23	64019N		3A	2
0DT23	64019R		13	1
0DT23	64020E	4730-01-296-9463	6	4
0DT23	64020F	4730-01-298-0151	11	1
0DT23	64020G	4730-01-298-0150	12	1
0DT23	64020R		9	4
0DT23	64020R		11A	1
0DT23	64021-1		9	36
0DT23	64022D	4730-01-297-6812	8	1
0DT23	64023D		7A	1
0DT23	64023E		7	1
DELETED			5	
0DT23	64025	4930-01-297-3776	4	1
0DT23	64349CDF4HX		3A	1
0DT23	64349HX	4930-01-297-3777	3	1
0DT23	82123	3110-01-247-1056	3	32
0DT23	82123	3110-01-247-1056	3	42
0DT23	82123	3110-01-247-1056	4	22
0DT23	82123	3110-01-247-1056	4	31
0DT23	82123	3110-01-247-1056	3A	56
0DT23	82123	3110-01-247-1056	3A	67
13348	8K1		3	4
13348	8K1		4	17
DELETED			5	
13348	8K1		7	3
13348	8K1		13	3
13348	8K1		14	3
13448	8K1		3A	3
13448	8K1		7A	3
13348	8K1		11A	3

CROSS-REFERENCE INDEXES

FIGURE AND ITEM NUMBER INDEX

FIG.	ITEM	STOCK NUMBER	CAGEC	PART NUMBER
1	1		0DT23	64014
2	1	4930-01-383-9467	0DT23	64017B
3		4820-01-338-1885	0DT23	44716
3			0DT23	47023
3	1	4930-01-297-3777	0DT23	64349HX
3	2		0DT23	64019N
3	3		0DT23	47032-1
3	4		13348	8K1
3	5		0DT23	47062
3	6		0DT23	220146
3	7		0DT23	220162
3	8	5305-00-988-1720	96906	MS35206-276
3	9	5330-00-248-3835	96906	MS29513-010
3	10		0DT23	220265
3	11	5330-00-260-9338	96906	MS29513-227
3	12		0DT23	220330
3	13		0DT23	220146
3	14		0DT23	220161
3	15		0DT23	47037-1
3	16	5310-00-020-3260	96906	MS21083C5
3	17	5310-00-167-0803	88044	AN960C516
3	18	5306-00-021-3912	96906	MS35308-334
3	19	5330-01-053-0217	0DT23	201201-151
3	20		0DT23	220174-1
3	21	5340-01-413-6109	0DT23	44807-1
3	22	5305-01-189-3761	96906	MS16997-78L
3	23	5310-00-167-0820	96906	AN960-516
3	24	5340-01-324-0954	0DT23	207808
3	25	5310-00-807-1468	96906	MS21042-4
3	26	5310-00-141-1795	88044	AN960-416
3	27	5306-00-151-1421	88044	AN4-13A
3	28	5340-01-415-1292	0DT23	210600
3	29	5340-01-246-2706	0DT23	207799
3	30	5305-01-246-3868	0DT23	209827
3	31	5330-00-248-3838	96906	MS29513-013
3	32	3110-01-247-1056	0DT23	82123

CROSS-REFERENCE INDEXES

FIGURE AND ITEM NUMBER INDEX

FIG.	ITEM	STOCK NUMBER	CAGEC	PART NUMBER
3	33	5360-01-246-2501	0DT23	209853
3	34	5330-01-007-4899	81349	M25988/1-235
3	35	4930-01-265-3145	0DT23	44327
3	36	5330-01-247-1080	0DT23	207807
3	37	5330-01-244-2274	81349	M25988/1-040
3	38	4930-01-265-3145	0DT23	207873
3	39	4730-01-413-2614	0DT23	210388
3	40		0DT23	47055
3	41	5305-01-246-3868	0DT23	209827
3	42	3110-01-247-1056	0DT23	82123
3	43	5315-00-234-1864	96906	MS24665-302
3	44	4930-00-848-1310	0DT23	23622
3	45		0DT23	47056
3	46	4820-01-385-8907	0DT23	210593
3	47	5305-01-413-0746	0DT23	LP65U82J12M
3	48	3040-01-385-9064	0DT23	220270
3	49	4320-01-413-4038	0DT23	44754
3	50	5315-01-025-4510	96906	MS24665-1013
3	51	5310-00-721-4434	88044	AN320C4
3	52	5315-01-413-0747	0DT23	207788
3	53	4320-01-413-4038	0DT23	207783
3	54	5315-01-341-8766	0DT23	D9-437
3	55		0DT23	207795
3	56	3040-01-385-8986	0DT23	210368
3	57	4930-01-385-9488	0DT23	47058
3	58	5340-01-053-0192	0DT23	24636
3	59	3110-01-385-3438	0DT23	220271
3	60	5330-01-264-0134	0DT23	209029
3	61	5315-01-053-0194	0DT23	24780
3	62	5315-01-385-5535	0DT23	220272
3	63	5360-00-155-5099	0DT23	20909
3	64	5330-00-833-4210	96906	MS28774-017
3	65	5330-01-246-7351	0DT23	207792
3	66	5330-00-279-9410	81349	M25988/1-145
3	67	4930-01-244-8043	0DT23	207784

CROSS-REFERENCE INDEXES

FIGURE AND ITEM NUMBER INDEX

FIG.	ITEM	STOCK NUMBER	CAGEC	PART NUMBER
3	68	4930-01-385-9453	0DT23	220269
3A			0DT23	KD64349-1
3A			0DT23	KD64349-2
3A			0DT23	KD61428-5
3A			0DT23	KD64019-5
3A	1		0DT23	64349CDF4HX
3A	2		0DT23	64019N
3A	3		13348	8K1
3A	4		0DT23	28-2-G
3A	5		0DT23	220201-1-18
3A	6		0DT23	47062
3A	7		0DT23	220146
3A	8		0DT23	220162
3A	9	5305-00-988-1720	96906	MS35206-276
3A	10	5330-00-248-3835	96906	MS29513-010
3A	11		0DT23	220265
3A	12	5330-00-260-9338	96906	MS29513-227
3A	13		0DT23	220330
3A	14		0DT23	47115-100
3A	15		0DT23	2204-86
3A	16		0DT23	220479-100
3A	17		0DT23	220146
3A	18		0DT23	220161
3A	19		0DT23	220164-1
3A	20		0DT23	47037-1
3A	21	5310-00-020-3260	96906	MS21083C5
3A	22	5310-00-167-0803	88044	AN960C516
3A	23	5306-00-021-3912	96906	MS35308-334
3A	24	5330-01-053-0217	0DT23	201201-151
3A	25		0DT23	220174-1
3A	26	4930-01-265-3145	0DT23	44327
3A	27	5330-01-244-2274	81349	M25988/1-040
3A	28	5330-01-247-1080	0DT23	207807
3A	29	4930-01-653-3145	0DT23	207873
3A	30		0DT23	44646-45
3A	31	5365-00-613-8997	0DT23	RRT-268S

CROSS-REFERENCE INDEXES

FIGURE AND ITEM NUMBER INDEX

FIG.	ITEM	STOCK NUMBER	CAGEC	PART NUMBER
3A	32		0DT23	LP526C1024R8
3A	33		0DT23	600-001-10
3A	34	4930-01-053-0185	0DT23	24096
3A	35	4930-01-053-0190	0DT23	23889
3A	36	4930-01-053-0188	0DT23	23892
3A	37	4930-01-053-0187	0DT23	23893
3A	38	5330-00-531-4588	96906	MS29513-147
3A	39		0DT23	LP515-8R7
3A	40	5310-00-515-8058	88044	AN960-8
3A	41	4930-01-053-0189	0DT23	23890
3A	42		0DT23	220724-007
3A	43	3110-00-965-8485	96906	MS19060-1012
3A	44	5360-01-338-0240	0DT23	210189
3A	45		0DT23	220724-229
3A	46	5330-00-265-1076	96906	MS29513-126
3A	47	5330-01-053-0221	0DT23	24085
3A	48	5365-01-053-0186	0DT23	24059
3A	49	5330-01-247-1080	0DT23	207807
3A	50	5330-01-244-2274	81349	M25988/1-040
3A	51	5360-01-246-2501	0DT23	209853
3A	52	5330-01-007-4899	81349	M25988/1-235
3A	53		0DT23	40427
3A	54		0DT23	200484
3A	55	5330-00-263-8011	96906	MS29512-03
3A	56	3110-01-247-1056	0DT23	82123
3A	57		0DT23	209793
3A	58	5305-01-189-3761	96906	MS16997-78L
3A	59	5310-00-167-0820	96906	AN960-516
3A	60	5340-01-324-0954	0DT23	207808
3A	61	5310-00-807-1468	96906	MS21042-4
3A	62	5310-00-141-1795	88044	AN960-416
3A	63	5306-00-151-1421	88044	AN4-13A
3A	64	5340-01-415-1292	0DT23	210600
3A	65	5340-01-246-2707	0DT23	207799

CROSS-REFERENCE INDEXES

FIGURE AND ITEM NUMBER INDEX

FIG.	ITEM	STOCK NUMBER	CAGEC	PART NUMBER
3A	66	5305-01-246-3868	0DT23	209827
3A	67	3110-01-247-1056	0DT23	82123
3A	68	5360-01-246-2501	0DT23	209853
3A	69	5315-00-234-1864	96906	MS24665-302
3A	70	4930-00-848-1310	0DT23	23622
3A	71	4820-01-385-8907	0DT23	210593
3A	72	4730-01-413-2614	0DT23	210388
3A	73	5305-01-413-0746	0DT23	LP65U82J12M
3A	74	3040-01-385-9064	0DT23	220270
3A	75	5330-00-833-4210	96906	MS28774-017
3A	76	5330-01-246-7351	0DT23	207792
3A	77	5305-01-246-3868	0DT23	209827
3A	78	5330-00-248-3838	96906	MS29513-013
3A	79	5315-01-025-4510	96906	MS24665-1013
3A	80	5310-00-721-4434	88044	AN320C4
3A	81	5315-01-413-0747	0DT23	207788
3A	82	4320-01-413-4038	0DT23	207783
3A	83	5315-01-341-8766	0DT23	D9-437
3A	84		0DT23	207795
3A	85	3040-01-385-8986	0DT23	210368
3A	86	5315-01-053-0194	0DT23	24780
3A	87	5315-01-385-5535	0DT23	220272
3A	88	5360-00-155-5099	0DT23	20909
3A	89	5330-00-279-9410	81349	M25988/1-145
3A	90	5330-01-007-4899	81349	M25988/1-235
3A	91	4930-01-244-8043	0DT23	207784
3A	92	4930-01-385-9488	0DT23	47058
3A	93	5340-01-053-0192	0DT23	24636
3A	94	3110-01-385-3438	0DT23	220271
3A	95	5330-01-264-0134	0DT23	209029
3A	96		0DT23	44311
3A	97	4930-01-385-9453	0DT23	220269
4		4820-01-338-1885	0DT23	44716
4	1	4930-01-297-3776	0DT23	64025
4	2		0DT23	210-0224-100

CROSS-REFERENCE INDEXES

FIGURE AND ITEM NUMBER INDEX

FIG.	ITEM	STOCK NUMBER	CAGEC	PART NUMBER
4	3		0DT23	2NP-218
4	4		3A054	4912K66
4	5		1GX11	001-5404
4	6		1GX11	005-5406
4	7	5340-01-413-6109	0DT23	44807-1
4	8	5305-01-189-3761	96906	MS16997-78L
4	9	5310-00-167-0820	96906	AN960-516
4	10	5340-01-324-0954	0DT23	207808
4	11	5310-00-807-1468	96906	MS21042-4
4	12	5310-00-141-1795	88044	AN960-416
4	13	5306-00-151-1421	88044	AN4-13A
4	14	5340-01-415-1292	0DT23	210600
4	15	5340-01-246-2706	0DT23	207799
4	16		0DT23	47069
4	17		60808	8K1
4	18		0DT23	220224-1
4	19	5330-00-252-6050	96906	MS29513-138
4	20	5305-01-246-3868	0DT23	209827
4	21	5330-00-248-3838	96906	MS29513-013
4	22	3110-01-247-1056	0DT23	82123
4	23	5935-01-190-7485	0DT23	47042
4	24	5330-01-247-1080	0DT23	207807
4	25	5330-01-244-2274	81349	M25988/1-040
4	26	5330-01-007-4899	81349	M25988/1-235
4	27	5360-01-246-2501	0DT23	209853
4	28	4730-01-413-2614	0DT23	210388
4	29		0DT23	47055
4	30	5305-01-246-3868	0DT23	209827
4	31	3110-01-247-1056	0DT23	82123
4	32	5315-00-234-1864	96906	MS24665-302
4	33	4930-00-848-1310	0DT23	23622
4	34		0DT23	47056
4	35	4820-01-385-8907	0DT23	210593
4	36	5305-01-413-0746	0DT23	LP65U82J12M
4	37	3040-01-385-9064	0DT23	220270

CROSS-REFERENCE INDEXES

FIGURE AND ITEM NUMBER INDEX

FIG.	ITEM	STOCK NUMBER	CAGEC	PART NUMBER
4	38	5315-01-341-8766	0DT23	D9-437
4	39	4320-01-413-4038	0DT23	44754
4	40	5315-01-025-4510	96906	MS24665-1013
4	41	5310-00-721-4434	88044	AN320C4
4	42	5315-01-413-0747	0DT23	207788
4	43	4320-01-413-4038	0DT23	207783
4	44		0DT23	207795
4	45	3040-01-385-8986	0DT23	210368
4	46	4930-01-385-9488	0DT23	47058
4	47	5340-01-053-0192	0DT23	24636
4	48	3110-01-385-3438	0DT23	220271
4	49	5330-01-264-0134	0DT23	209029
4	50	5315-01-053-0194	0DT23	24780
4	51	5315-01-385-5535	0DT23	220272
4	52	5360-00-155-5099	0DT23	20909
4	53	5330-00-833-4210	96906	MS28774-017
4	54	5330-01-246-7351	0DT23	207792
4	55	5330-00-279-9410	81349	M25988/1-145
4	56	4930-01-244-8043	0DT23	207784
4	57	4930-01-385-9453	0DT23	220269
5	**DELETED**			
5	**DELETED**			
5	**DELETED**			
5	**DELETED**			
5	**DELETED**			
5	**DELETED**			
5	**DELETED**			
5	**DELETED**			
5	**DELETED**			
5	**DELETED**			
5	**DELETED**			
5	**DELETED**			
6			0DT23	47053
6	1		90598	MFG 0672-3
6	2		90598	MFG-1

CROSS-REFERENCE INDEXES

FIGURE AND ITEM NUMBER INDEX

FIG.	ITEM	STOCK NUMBER	CAGEC	PART NUMBER
6	3		70847	J212
6	4	4730-01-296-9463	0DT23	64020E
6	5		0DT23	47031-1
6	6		0DT23	47062
6	7		0DT23	220146
6	8		0DT23	220162
6	9	5305-00-988-1720	96906	MS35206-276
6	10	5330-00-248-3835	96906	MS29513-010
6	11		0DT23	220265
6	12		0DT23	220157
6	13	5330-00-291-7384	96906	MS29513-133
6	14		0DT23	220153
6	15	5330-00-260-9338	96906	MS29513-227
6	16		0DT23	220146
6	17		30308	PL24693C50
6	18		0DT23	47085
6	19		0DT23	220204
6	20		0DT23	220145
6	21		0DT23	220142
6	22		0DT23	220147
6	23		0DT23	220154
6	24	5330-00-248-3840	96906	MS29513-14
6	25	5310-01-259-7783	74197	W0367-006-S
6	26		0DT23	220150
6	27		0DT23	220152
6	28		0DT23	220158
6	29	5330-00-641-0119	96906	MS29513-134
6	30		0DT23	GF16997-24L
6	31		0DT23	220151
6	32		0DT23	220149
6	33		0DT23	220161
6	34		0DT23	220163-1
6	35		0DT23	220130
6	36		0WDU1	CPFH32DMIL50
6	37		90598	MFG0673

CROSS-REFERENCE INDEXES

FIGURE AND ITEM NUMBER INDEX

FIG.	ITEM	STOCK NUMBER	CAGEC	PART NUMBER
7			0DT23	47033
7	1		0DT23	64023E
7	2		0DT23	47032-1
7	3		13348	8K1
7	4		0DT23	47062
7	5		0DT23	220146
7	6		0DT23	220162
7	7	5305-00-988-1720	96906	MS35206-276
7	8	5330-00-248-3835	96906	MS29513-010
7	9		0DT23	220265
7	10	5330-00-260-9338	96906	MS29513-227
7	11		0DT23	220330
7	12		0DT23	220146
7	13		0DT23	220161
7	14		0DT23	220170-1
7A	1		0DT23	64023D
7A	2		0DT23	47031-1
7A	3		13348	8K1
7A	4		0DT23	47062
7A	5		0DT23	220146
7A	6		0DT23	220162
7A	7	5305-00-988-1720	96906	MS35206-276
7A	8	5330-00-248-3835	96906	MS29513-010
7A	9		0DT23	220265
7A	10		0DT23	220157
7A	11	5330-00-291-7384	96906	MS29513-133
7A	12		0DT23	220153
7A	13	5330-00-260-9338	96906	MS29513-227
7A	14		0DT23	220146
7A	15		30308	PL24693C50
7A	16		0DT23	47085
7A	17		0DT23	220204
7A	18		0DT23	220145
7A	19		0DT23	220142
7A	20		0DT23	220147

CROSS-REFERENCE INDEXES

FIGURE AND ITEM NUMBER INDEX

FIG.	ITEM	STOCK NUMBER	CAGEC	PART NUMBER
7A	21		0DT23	220154
7A	22	5330-00-248-3840	96906	MS29513-014
7A	23	5310-01-259-7783	77535	W0367-006-S
7A	24		0DT23	220150
7A	25		0DT23	220152
7A	26		0DT23	220158
7A	27	5330-00-641-0119	96906	MS29513-134
7A	28		0DT23	GF16997-24L
7A	29		0DT23	220151
7A	30		0DT23	220149
7A	31		0DT23	220161
7A	32		0DT23	220163-1
7A	33		0DT23	220166-1
7A			0DT23	47053
8			0DT23	47053
8	1	4730-01-297-6812	0DT23	64022D
8	2		0DT23	47031-1
8	3		0DT23	47062
8	4		0DT23	220146
8	5		0DT23	220162
8	6	5305-00-988-1720	96906	MS35206-276
8	7	5330-00-248-3835	96906	MS29513-010
8	8		0DT23	220265
8	9		0DT23	220157
8	10	5330-00-291-7384	96906	MS29513-133
8	11		0DT23	220153
8	12	5330-00-260-9338	96906	MS29513-227
8	13		0DT23	220146
8	14		30308	PL24693C50
8	15		0DT23	47085
8	16		0DT23	220204
8	17		0DT23	220145
8	18		0DT23	220142
8	19		0DT23	220147
8	20		0DT23	220154

CROSS-REFERENCE INDEXES

FIGURE AND ITEM NUMBER INDEX

FIG.	ITEM	STOCK NUMBER	CAGEC	PART NUMBER
8	21	5330-00-248-3840	96906	MS29513-14
8	22	5310-01-259-7783	74197	W0367-006-S
8	23		0DT23	220150
8	24		0DT23	220152
8	25		0DT23	220158
8	26	5330-00-641-0119	96906	MS29513-134
8	27		0DT23	GF16997-24L
8	28		0DT23	220151
8	29		0DT23	220149
8	30		0DT23	220161
8	31		0DT23	220163-1
8	32		0DT23	220165-1
9			0DT23	47053
9	1		90598	MFG 0672-1
9	2		90598	MFG-2
9	3	4730-01-244-7275	70847	J213
9	4		0DT23	64020R
9	5		0DT23	47031-1
9	6		0DT23	47062
9	7		0DT23	220146
9	8		0DT23	220162
9	9	5305-00-988-1720	96906	MS35206-276
9	10	5330-00-248-3835	96906	MS29513-010
9	11		0DT23	220265
9	12		0DT23	220157
9	13	5330-00-291-7384	96906	MS29513-133
9	14		0DT23	220153
9	15	5330-00-260-9338	96906	MS29513-227
9	16		0DT23	220146
9	17		30308	PL24693C50
9	18		0DT23	47085
9	19		0DT23	220204
9	20		0DT23	220145
9	21		0DT23	220142
9	22		0DT23	220147

CROSS-REFERENCE INDEXES

FIGURE AND ITEM NUMBER INDEX

FIG.	ITEM	STOCK NUMBER	CAGEC	PART NUMBER
9	23		0DT23	220154
9	24	5330-00-248-3840	96906	MS29513-14
9	25	5310-01-259-7783	74197	W0367-006-S
9	26		0DT23	220150
9	27		0DT23	220152
9	28		0DT23	220158
9	29	5330-00-641-0119	96906	MS29513-134
9	30		0DT23	GF16997-24L
9	31		0DT23	220151
9	32		0DT23	220149
9	33		0DT23	220161
9	34		0DT23	220163-1
9	35		0DT23	220129
9	36		0DT23	64021-1
9	37		0DT23	220253-1
9	38		0DT23	220277
9	39		0DT23	3020BAL-TN
9	40	5330-00-088-9166	96906	MS27030-8
9	41	4730-00-929-0790	96906	MS27029-15
9	42	5365-00-926-5411	81718	H01434M
9	43	4010-00-171-4512	80244	RR-C-271 TY2CL3
9	44		0WSD1	CPFH48DMIL50
9	45		90598	MFG0673
10	1	5975-01-050-5707	97403	13219E0462
11			0DT23	47053
11	1	4730-01-298-0151	0DT23	64020F
11	2		0DT23	47031-1
11	3		0DT23	47062
11	4		0DT23	220146
11	5		0DT23	220162
11	6	5305-00-988-1720	96906	MS35206-276
11	7	5330-00-248-3835	96906	MS29513-010
11	8		0DT23	220265
11	9		0DT23	220157
11	10	5330-00-291-7384	96906	MS29513-133

CROSS-REFERENCE INDEXES

FIGURE AND ITEM NUMBER INDEX

FIG.	ITEM	STOCK NUMBER	CAGEC	PART NUMBER
11	11		0DT23	220153
11	12	5330-00-260-9338	96906	MS29513-227
11	13		0DT23	220146
11	14		30308	PL24693C50
11	15		0DT23	47085
11	16		0DT23	220204
11	17		0DT23	220145
11	18		0DT23	220142
11	19		0DT23	220147
11	20		0DT23	220154
11	21	5330-00-248-3840	96906	MS29513-14
11	22	5310-01-259-7783	74197	W0367-006-S
11	23		0DT23	220150
11	24		0DT23	220152
11	25		0DT23	220158
11	26	5330-00-641-0119	96906	MS29513-134
11	27		0DT23	GF16997-24L
11	28		0DT23	220151
11	29		0DT23	220149
11	30		0DT23	220161
11	31		0DT23	220163-1
11	32		0DT23	220124
11A			0DT23	KD64020-2
11A	1		0DT23	64020R
11A	2		0DT23	47031-1
11A	3		13348	8K1
11A	4		0DT23	47062
11A	5		0DT23	220146
11A	6		0DT23	220162
11A	7	5305-00-988-1720	96906	MS35206-276
11A	8	5330-00-248-3835	96906	MS29513-010
11A	9		0DT23	220265
11A	10		0DT23	220157
11A	11	5330-00-291-7384	96906	MS29513-133
11A	12		0DT23	220153

CROSS-REFERENCE INDEXES

FIGURE AND ITEM NUMBER INDEX

FIG.	ITEM	STOCK NUMBER	CAGEC	PART NUMBER
11A	13	5330-00-260-9338	96906	MS29513-227
11A	14		0DT23	220146
11A	15		30308	PL24693C50
11A	16		0DT23	47085
11A	17		0DT23	220204
11A	18		0DT23	220145
11A	19		0DT23	220142
11A	20		0DT23	220147
11A	21		0DT23	220154
11A	22	5330-00-248-3840	96906	MS29513-14
11A	23	5310-01-259-7783	77535	W0367-006-S
11A	24		0DT23	220150
11A	25		0DT23	220152
11A	26		0DT23	220158
11A	27	5330-00-641-0119	96906	MS29513-134
11A	28		0DT23	GF16997-24L
11A	29		0DT23	220151
11A	30		0DT23	220149
11A	31		0DT23	220161
11A	32		0DT23	220163-1
11A	33		0DT23	220138-1
12			0DT23	47053
12	1	4730-01-298-0150	0DT23	64020G
12	2		0DT23	47031-1
12	3		0DT23	47062
12	4		0DT23	220146
12	5		0DT23	220162
12	6	5305-00-988-1720	96906	MS35206-276
12	7	5330-00-248-3835	96906	MS29513-010
12	8		0DT23	220265
12	9		0DT23	220157
12	10	5330-00-291-7384	96906	MS29513-133
12	11		0DT23	220153
12	12	5330-00-260-9338	96906	MS29513-227
12	13		0DT23	220146

CROSS-REFERENCE INDEXES

FIGURE AND ITEM NUMBER INDEX

FIG.	ITEM	STOCK NUMBER	CAGEC	PART NUMBER
12	14		30308	PL24693C50
12	15		0DT23	47085
12	16		0DT23	220204
12	17		0DT23	220145
12	18		0DT23	220142
12	19		0DT23	220147
12	20		0DT23	220154
12	21	5330-00-248-3840	96906	MS29513-14
12	22	5310-01-259-7783	77535	W0367-006-S
12	23		0DT23	220150
12	24		0DT23	220152
12	25		0DT23	220158
12	26	5330-00-641-0119	96906	MS29513-134
12	27		0DT23	GF16997-24L
12	28		0DT23	220151
12	29		0DT23	220149
12	30		0DT23	220161
12	31		0DT23	220163-1
12	32		0DT23	220132
12	33		80691	20D-AL
12	34	5330-00-612-2414	96906	MS27030-6
13			0DT23	47033
13	1		0DT23	64019R
13	2		0DT23	47032-1
13	3		13348	8K1
13	4		0DT23	47062
13	5		0DT23	220146
13	6		0DT23	220162
13	7	5305-00-988-1720	96906	MS35206-276
13	8	5330-00-248-3835	96906	MS29513-010
13	9		0DT23	220265
13	10	5330-00-260-9338	96906	MS29513-227
13	11		0DT23	220330
13	12		0DT23	220146
13	13		0DT23	220161

CROSS-REFERENCE INDEXES

FIGURE AND ITEM NUMBER INDEX

FIG.	ITEM	STOCK NUMBER	CAGEC	PART NUMBER
13	14		0DT23	220138-1
14			0DT23	47033
14	1	4730-01-296-9462	0DT23	64019F
14	2		0DT23	47032-1
14	3		13348	8K1
14	4		0DT23	47062
14	5		0DT23	220146
14	6		0DT23	220162
14	7	5305-00-988-1720	96906	MS35206-276
14	8	5330-00-248-3835	96906	MS29513-010
14	9		0DT23	220265
14	10	5330-00-260-9338	96906	MS29513-227
14	11		0DT23	220330
14	12		0DT23	220146
14	13		0DT23	220161
14	14		0DT23	220140-1
15	1	5120-00-278-9925	81348	GGG-C-00413

APPENDIX D

COMPONENTS OF END ITEM AND BASIC ISSUE ITEMS LIST

Section I. INTRODUCTION

D-1. SCOPE.

This appendix lists components of end item and basic issue items for the HEMTT Tanker Aircraft Refueling System (HTARS) to help you inventory items required for safe and efficient operation.

D-2. GENERAL.

The Components of End Item and Basic Issue Items List are divided into the following sections:

a. Section II. Components of End Item. This listing is for informational purposes only, and is not authority to requisition replacements. These items are part of the end item, but are removed and separately packaged for transportation or shipment. As part of the end item, these items must be with the end item whenever it is issued or transferred between property accounts. Illustrations are furnished to assist you in identifying the items.

b. Section III. Basic Issue Items. These are the minimum essential items required to place the HTARS in operation, to operate it, and to perform emergency repairs. Although shipped separately packaged, BII must be with the distribution system during operation and whenever it is transferred between property accounts. The illustrations will assist you with hard-to-identify items. This manual is your authority to request/requisition replacement BII, based on TOE/MTOE authorization of the end item.

D-3. EXPLANATION OF COLUMNS.

The following provides an explanation of columns found in the tabular listing:

a. Column (1) Illustration Number (Illus Number). This column indicates the number of the illustration in which the item is shown.

b. Column (2) National Stock Number. Indicates the national stock number assigned to the item and will be used for requisitioning purposes.

c. Column (3) Description. Indicates the Federal item and name and, if required, a minimum description to identify and locate the item. The last line for each item indicates the CAGE (in parentheses) followed by the part number.

d. Column (4) Unit of Measure (U/M). Indicates the measure used in performing the actual operational/maintenance function. This measure is expressed by a two-character alphabetical abbreviation (e.g., ea, in, pr).

e. Column (5) Quantity required (Qty rqd). Indicates the quantity of the item authorized to be used with/on the equipment.

Section II. COMPONENTS OF END ITEM

(1) ILLUS NUMBER	(2) NATIONAL STOCK NUMBER	(3) DESCRIPTION CAGE and Part Number	Usable on Code	(4) U/M	(5) QTY. RQD
1		ADAPTER, 2-IN SEXLESS TO 1-1/2 IN MALE THREAD (90598) M53076-12		EA	2
2		ADAPTER, 2-IN SEXLESS TO FEMALE CAMLOCK, VALVE (90598) M53076-11		EA	2
3		ADAPTER, 2-IN SEXLESS TO MALE CAMLOCK (90598) M53076-14		EA	2
4		ADAPTER, 2-IN SEXLESS TO MALE CAMLOCK, VALVE (90598) M53076-10		EA	2
5		**DELETED**			
6		ELBOW, 2-IN SEXLESS (90598) M53076-4		EA	2
7		HOSE ASSEMBLY, DISCHARGE, 3-LN X 50 FT, 3- IN FEMALE CAMLOCK X 2 IN SEXLESS; WITH STRAP (90598) M53076-1		EA	1
8		HOSE ASSEMBLY, DISCHARGE, SEXLESS, 2-LN X 50-FT, WITH STRAP (90598) M53076-3		EA	10
9		NOZZLE, CCR W/SEXLESS COUPLING (90598) M53076-6		EA	4
10		NOZZLE, OPEN PORT (90598) M53076-5		EA	4
11		NOZZLE, SINGLE POINT REFUELING W/SEXLESS COUPLING (90598) M53076-7		EA	4
12		PLATE, ASSEMBLY (90598) M53076-15		EA	2
13		RECIRCULATION NOZZLE (90598) M53076-13		EA	1
14		ROD, GROUND (197403) 13219E0462		EA	4
15		TEE, 2-IN SEXLESS W/VALVES (90598) M53076-2		EA	3

1

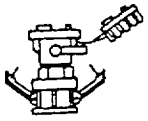

2

3

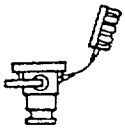

4

DELETED

5

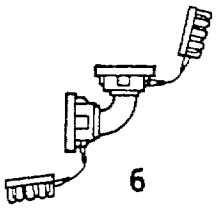

6

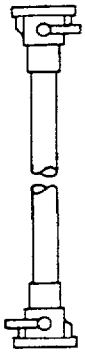

7

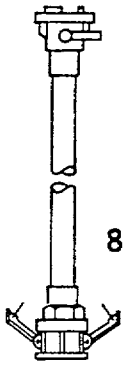

8

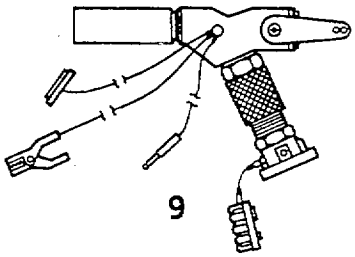

9

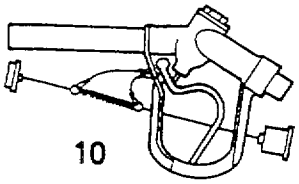

10

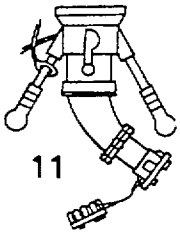

11

12

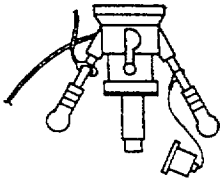

13

14

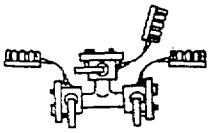

15

Section III. BASIC ISSUE ITEMS

(1) ILLUS NUMBER	(2) NATIONAL STOCK NUMBER	(3) DESCRIPTION CAGE and Part Number	Usable on Code	(4) U/M	(5) QTY. RQD
1		TECHNICAL MANUAL, OPERATOR'S, UNIT AND DIRECT SUPPORT MAINTENANCE MANUAL WITH REPAIR PARTS AND SPECIAL TOOLS LIST FOR HEMTT TANKER AIRCRAFT REFUELING SYSTEM, TM10-4930-247-13&P.		EA	1

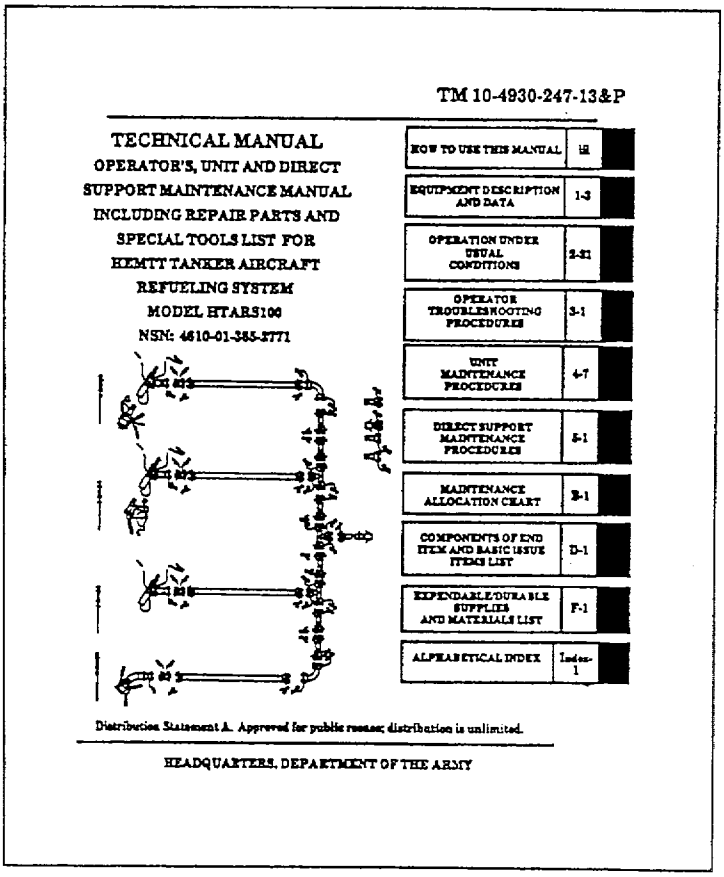

TM 10-4930-247-13&P

TECHNICAL MANUAL
OPERATOR'S, UNIT AND DIRECT
SUPPORT MAINTENANCE MANUAL
INCLUDING REPAIR PARTS AND
SPECIAL TOOLS LIST FOR
HEMTT TANKER AIRCRAFT
REFUELING SYSTEM
MODEL HTARS100
NSN: 4610-01-385-3771

HOW TO USE THIS MANUAL	iii
EQUIPMENT DESCRIPTION AND DATA	1-3
OPERATION UNDER USUAL CONDITIONS	2-21
OPERATOR TROUBLESHOOTING PROCEDURES	3-1
UNIT MAINTENANCE PROCEDURES	4-7
DIRECT SUPPORT MAINTENANCE PROCEDURES	5-1
MAINTENANCE ALLOCATION CHART	B-1
COMPONENTS OF END ITEM AND BASIC ISSUE ITEMS LIST	D-1
EXPENDABLE/DURABLE SUPPLIES AND MATERIALS LIST	F-1
ALPHABETICAL INDEX	Index-1

Distribution Statement A. Approved for public release; distribution is unlimited.

HEADQUARTERS, DEPARTMENT OF THE ARMY

APPENDIX E

ADDITIONAL AUTHORIZATION LIST

Section I. INTRODUCTION

E-1. SCOPE.

This appendix lists additional items that you are authorized for the support of the HTARS.

E-2. GENERAL.

This list identifies items that do not have to accompany the HTARS and that do not have to be turned in with it. These items are all authorized to you by CTA, MTOE, TDA, or JTA.

E-3. EXPLANATION OF LISTING.

National stock numbers, descriptions, and quantities are provided to help you identify and request the additional items you require to support this equipment. The items are listed in alphabetical sequence by item name. If the item you require differs between serial numbers of the same model, effective serial numbers are shown in the last line of the description. If the item required differs for different models of the equipment, the model is shown under the "Usable On" heading in the description column.

Section II. ADDITIONAL AUTHORIZED ITEMS LIST

(1) NATIONAL STOCK NUMBER	(2) DESCRIPTION CAGEC AND PART NUMBER USABLE ON CODE	(3) U/I	(4) QTY RECM
	Ground Cable (12 feet) (94703) 13220E1127-2	EA	4

APPENDIX F

EXPENDABLE AND DURABLE ITEMS LIST

Section I. INTRODUCTION

F-1. SCOPE.

This appendix lists expendable/durable supplies and materials you will need to operate and maintain the HTARS. This listing is for informational purpose only and is not authority to requisition the listed items. These items are authorized to you by CTA 50-970, Expendable and Durable Items (Except Medical, Class V, Repair Parts, and Heraldic Items), or CTA 8-100, Army Medical Department Expendable/Durable Items.

F-2. EXPLANATION OF COLUMNS.

a. Column 1 Item Number. This number is assigned to the entry in the listing and is referenced in the task Initial Setup instructions to identify the material; e.g., "Drycleaning solvent (App E)."

b. Column 2 Category. This column identified the lowest category of maintenance that requires the listed item:

C - Operator/Crew
O - Unit Maintenance
F - Direct Support Maintenance
G - General Support Maintenance

c. Column 3 National Stock Number. This is the national stock number assigned to the item; use it to request or requisition the items.

d. Column 4 Description. Indicates the federal item name and, if required, a description to identify the item. The last line for each item indicates the part number followed by the Commercial And Government Entity (CAGE) Code for Manufacturer in parentheses, if applicable.

e. Column 5 Unit of Measure (U/M). Indicates the measure used in performing the actual maintenance function. This measure is expressed by a two character alphabetical abbreviation (e.g., ea, in, pr). If the unit of measure differs from the rest of the issue, requisition the lowest unit of issue that will satisfy your requirements.

Section II. EXPENDABLE AND DURABLE ITEMS LIST

Item Number	Category	National Stock Number	Description	U/M
1	O	6850-00-331-3349	Cleaning Solvent, Federal Specification P-D-680, Type III	GL
2	O	7920-00-295-1711	Rags, Wiping (58536) A-A-531	LB
3	O	9150-00-119-9291	Silicone Compound (81349) MIL-G-4343	TU
4	O	8030-01-837-5885	Sealing Compound (77247) MIL-S-45180	TU
5	O	8030-00-889-3535	Tape., Anti-seize (80244) MIL-T-27730SZ2	RL
6	F	9150-00-250-0926	Technical Petrolatum (81348) VV-P-236	CN
7	F	8030-00-148-9833	Sealing Compound (05972) 271	BT

APPENDIX G

LUBRICATION INSTRUCTIONS

NOT APPLICABLE

APPENDIX H

ILLUSTRATED LIST OF MANUFACTURED ITEMS

NOT APPLICABLE

APPENDIX I

TORQUE LIMITS

I-1. SCOPE.

This appendix provides torque limits for general use type fasteners. The torque values given in this appendix shall be used when specific torque values are not identified in the maintenance instructions.

I-2. TORQUE LIMITS.

Torque limits for fine threaded fasteners as compared to coarse threaded fasteners of the same diameter are slightly higher, but are not significant to general use. The following table identifies the torque limits for various sizes and types of fasteners.

APPENDIX I

TORQUE LIMITS - cont.

TYPE	MINIMUM TENSILE STRENGTH	MATERIAL	BODY SIZE OR OUTSIDE DIAMETER OF FASTENER												
			#2	#3	#4	#5	#6	#8	#10	1/4	1/10	1/8	1/16	1/2	5/16
SAE 0-1-2	74,000 PSI	LOW CARBON STEEL								6 (8)	12 (16)	20 (27)	32 (44)	47 (64)	69 (94)
SAE 3	100,000 PSI	MEDIUM CARBON STEEL								9 (12)	17 (23)	30 (41)	47 (64)	69 (94)	103 (140)
SAE 5	120,000 PSI	MEDIUM CARBON HEAT TREAT STEEL								10 (14)	19 (26)	33 (45)	54 (73)	78 (106)	114 (155)
SAE 6	133,000 PSI	MEDIUM CARBON STEEL QUENCHED TEMPERED								12 (16)	24 (33)	43 (58)	69 (94)	106 (144)	150 (203)
SAE 7	133,000 PSI	MEDIUM CARBON ALLOY STEEL								13 (18)	25 (34)	44 (60)	71 (96)	110 (141)	154 (209)
SAE 8	MEDIUM 150,000 PSI	CARBON ALLOY STEEL								14 (19)	29 (39)	47 (64)	78 (106)	119 (161)	169 (229)
SOCKET HEAD CAP SCREW	160,000 PSI	HIGH CARBON CASE HARDENED STEEL								16 (22)	33 (45)	54 (73)	84 (114)	125 (170)	180 (244)
SOCKET SET SCREW	212,000 PSI	HIGH CARBON CASE HARDENED STEEL					9 (1.0)	16 (1.8)	30 (3.4)	70 (7.9)	140 (15.8)	18 (2.0)	29 (3.3)	43 (4.9)	63 (7.1)

APPENDIX I

TORQUE LIMITS - cont.

TYPE	BODY SIZE OR OUTSIDE DIAMETER OF FASTENER															
	3/8	3/4	7/8	1	1 1/8	1 1/4	1 3/8	1 12	1 5/8	1 3/4	1 7/8	2	2 1/4	2 1/2	2 3/4	3
SAE 0-1-2	96 (130)	155 (210)	206 (279)	310 (420)	480 (651)	675 (915)	900 (1220)	1100 (1492)	1470 (1993)	1900 (2576)	2360 (3200)	2750 (3729)	3450 (4678)	4400 (5966)	7350 (9967)	9500 (12882)
SAE 3	145 (197)	234 (317)	372 (504)	551 (747)	872 (1182)	1211 (1642)	1624 (2202)	1943 (2635)	2660 (3607)	3463 (4696)	4695 (6366)	5427 (7359)	7226 (9798)	8049 (10914)	13450 (18238)	17548 (23795)
SAE 5	154 (209)	257 (349)	382 (518)	587 (796)	794 (1077)	1105 (1498)	1500 (2034)	1775 (2407)	2425 (3288)	3150 (4271)	4200 (5695)	4550 (6170)	6550 (8882)	7175 (9729)	13000 (17628)	16000 (21696)
SAE 6	209 (283)	350 (475)	550 (746)	825 (1119)	1304 (1768)	1815 (2461)	2434 (3301)	2913 (3950)	3985 (5404)	5189 (7036)	6980 (9465)	7491 (10158)	10825 (14679)	14983 (20317)	20151 (27325)	26286 (35644)
SAE 7	215 (292)	360 (488)	570 (773)	840 (1139)	1325 (1797)	1825 (2475)	2500 (3390)	3000 (4068)	4000 (5424)	5300 (7187)	7000 (9492)	7500 (10170)	11000 (14916)	15500 (21018)	21000 (28476)	27000 (36612)
SAE 8	230 (312)	380 (515)	600 (814)	900 (1220)	1430 (1940)	1975 (2678)	2650 (3593)	3200 (4339)	4400 (5966)	5650 (7661)	7600 (10306)	8200 (11119)	12000 (16272)	17000 (23052)	23000 (31188)	29000 (39324)
SOCKET HEAD CAP SCREW	250 (339)	400 (542)	640 (868)	970 (1315)	1520 (2061)	2130 (2888)	2850 (3865)	3450 (4678)	4700 (6373)	6100 (8272)	8200 (11119)	8800 (11933)	13000 (17628)	18000 (24408)	24000 (32544)	31000 (42036)
SOCKET SET SCREW	100 (136)	146 (198)														

APPENDIX I

TORQUE LIMITS - cont.

TYPE	MINIMUM TENSILE STRENGTH	MATERIAL	BODY SIZE OR OUTSIDE DIAMETER OF FASTENER													
			#2	#3	#4	#5	#6	#8	#10	1/4	1/10	1/8	1/16	1/2	5/16	
MACHINE SCREW YELLOW BRASS	60,000 PSI	COPPER (CU) 63% ZINC (ZN) 37%	2 (.2)	3.3 (.3)	4.4 (.5)	6.4 (.7)	8 (.9)	16 (1.8)	20 (2.3)	65 (7.3)	110 (12.4)	17 (23)	27 (37)	37 (50)	49 (66)	
SILOCONE BRONZE	70,000 PSI	COPPER (CU) 96% ZINC (ZN) 2% SILICON (SI) 2%	2.3 (.2)	3.7 (.3)	4.9 (.5)	7.2 (.8)	10 (1.1)	19 (2.1)	22 (2.5)	70 (7.9)	125 (14.1)	20 (27)	30 (41)	41 (56)	53 (72)	

TYPE	BODY SIZE OR OUTSIDE DIAMETER OF FASTENER															
	3/8	3/4	7/8	1	1 1/8	1 1/4	1 3/8	1 1/2	1 5/8	1 3/4	1 7/8	2	2 1/4	2 1/2	2 3/4	3
MACHINE SCREW YELLOW BRASS	78 (106)	104 (141)	160 (217)	215 (292)	325 (441)	400 (542)		595 (807)								
SILOCONE BRONZE TYPE "B"	88 (119)	117 (159)	180 (244)	250 (339)	365 (495)	450 (610)		655 (888)								

LEGEND

1. TORQUE VALUES: All numbers are in foot-pounds except those that are underlined, which are inch-pounds.

2. Numbers in parentheses are Newton-Meters.

APPENDIX J

MANDATORY REPLACEMENT PARTS

ITEM NO.	NOMENCLATURE	PART NUMBER
1	Bumper	220161
2	Seal	220146
3	Shear Pin	220261
4	Repair Kit, Non-valved Coupling Consisting of: Preformed Packing (fitting) (1) Preformed Packing (screw) (1) Spring Bonding (1) Screw, Self-locking (1) Ball, 3/16 in. Dia (41)	47033 MS29513-227 MS29513-010 220330 MS35206-276 220265
5	Repair Kit, Valved Coupling Consisting of: Preformed Packing (fitting) (1) Preformed Packing (screw) (1) Spring, Seal Loading (8) Screw, Self-locking (1) Ball, 3/16 in. Dia (41) Seal, Ball, Upstream (1)	47053 MS29513-277 MS29513-133 220153 MS35206-276 220265 220157
6	Self Locking Screw (handle)	PL24693C50
7	Preformed Packing (shaft)	MS29513-14
8	Seal, Ball, Downstream (1)	220158
9	Preformed Packing (ball)	MS29513-134
10	Clamp (2-inch hose)	J212
11	Clamp (3-inch hose)	J213
12	Gasket (female QD)	MS27030-8
13	Preformed Packing (dust cap)	MS29513-138
14	Slip Ring (adapter)	207807
15	Preformed Packing (adapter)	M25988/1-040
16	Preformed Packing (body)	M25988/1-040
17	Preformed Packing (ball screw)	MS29513-013
18	Self Locking Nut	MS21042-14
19	Socket Screw, Self Locking (grip)	MS16997-78L
20 21	Preformed Packing (elbow) Self Locking Nut (elbow)	201201-151 MS21083C5

MANDATORY REPLACEMENT PARTS

22	Repair Kit, D1 and Recirculation Nozzle	KD64349-1
	Consisting of:	
	Screw (2)	209827
	Clip, Continuity	209853
	Preformed Packing	M25988/1-145
	Preformed Packing	MS29513-013
	Seal	207807
	Preformed Packing	M25988/1-040
	Preformed Packing	M25988/1-040
	Preformed Packing	207792
	Backup Ring	MS28774-017
	Seal Assembly (nose)	47058
	Cotter Pin	MS24665-302
23	Cotter Pin	MS24665-013
24	Kit, Seal	KD61428-5
	Consisting of:	
	Stat-O-seal	600-001-10
	Ring, Outer Piston	23893
	Packing, Preformed	MS29513-17
	Quad-ring	220724-007
	Packing Preformed	MS29513-126
	Gasket	24085
	Spacer, Seal	24059
	Seal, Plain	207807
	Packing, Preformed	M25988/1-040
	Spring, Helical	209853
	Packing, Preformed	M25988/1-235
	Packing, Preformed	MX29512-03
25	Kit, Parts	KD64349-2
	Consisting of:	
	Handle, Bow	207808
	Cover, Access	207799
	Poppet, Nozzle Assy	210593
	Plug	210388
	Screw, Cap, Locking	LP65U82J12M
	Handle, Crank	220270
	Pin, Index	24780

ALPHABETICAL INDEX

ALPHABETICAL INDEX - cont

☆U.S. GOVERNMENT PRNTNG OFFICE:1999-746-025/80119

ALPHABETICAL INDEX - cont.

ALPHABETICAL INDEX - cont.

By Order of the Secretary of the Army:

GORDON R. SULLIVAN
General, United States Army
Chief of Staff

Official:

MILTON H. HAMILTON
Administrative Assistant to the
Secretary of the Army
06467

DISTRIBUTION:
To be distributed in accordance with DA Form 12-25-E, block no. 6125, requirements for TM 10-4930-247-13&P.

☆U.S. GOVERNMENT PRINTING OFFICE: 1994 655-02800173

These are the instructions for sending an electronic 2028

The following format must be used if submitting an electronic 2028. The subject line must be exactly the same and all fields must be included; however only the following fields are mandatory: 1, 3, 4, 5, 6, 7, 8, 9, 10, 13, 15, 16,17, and 27.

From: "Whomever" <whomever@avma27.army.mil>
To: mpmt%/oavma28@st-louis-emh7.army. mil
Subject: DA Form 2028

1. ***From***: Joe Smith
2. *Unit*: home
3. ***Address*:** 4300 Park
4. ***City:*** Hometown
5. ***St:*** MO
6. ***Zip***: 77777
7. ***Date Sent***: 19-OCT-93
8. ***Pub no***: 55-2840-229-23
9. ***Pub Title***: TM
10. ***Publication Date***: 04-JUL-85
11. *Change Number*: 7
12. *Submitter Rank* : MSG
13. ***Submitter FName***: Joe
14. *Submitter MName*: T
15. ***Submitter LName***: Smith
16. ***Submitter Phone***: 123-123-1234
17. ***Problem***: **1**
18. *Page*: 2
19. *Paragraph*: 3
20. *Line*: 4
21. *NSN:* 5
22. *Reference*: 6
23. *Figure*: 7
24. *Table*: 8
25. *Item:* 9
26. *Total:* 123
27. ***Text***:

This is the text for the problem below line 27.

☆U.S. GOVERNMENT PRINTING OFFICE: 1997 554-024/60039

RECOMMENDED CHANGES TO EQUIPMENT TECHNICAL PUBLICATIONS

SOMETHING WRONG WITH THIS PUBLICATION?

THEN . . . JOT DOWN THE DOPE ABOUT IT ON THIS FORM. CAREFULLY TEAR IT OUT. FOLD IT AND DROP IT IN THE MAIL!

FROM: (PRINT YOUR UNIT'S COMPLETE ADDRESS)
Your Mailing Address

DATE SENT
Date you filled out this form

PUBLICATION NUMBER	PUBLICATION DATE	PUBLICATION TITLE
TM 10-4930-247-13&P	Date of TM	OPERATOR'S, UNIT & DIRECT SUPPORT RPSTL FOR HEMTT TANKER AIRCRAFT REFUELING SYSTEM

BE EXACT. . .PIN-POINT WHERE IT IS

PAGE NO.	PARA-GRAPH	FIGURE NO.	TABLE NO.	IN THIS SPACE TELL WHAT IS WRONG AND WHAT SHOULD BE DONE ABOUT IT:
4-26	a.			Step No. 1 says to remove hose from where to what? It is also not identified.
2-38				Procedure is continued from another page, but cap is not removed - add step to procedure.

SAMPLE

PRINTED NAME, GRADE OR TITLE, AND TELEPHONE NUMBERS		SIGN HERE:
Doe, John, CPL	810-755-1313	*CPL John Doe*

DA FORM 1 JUL 79 2028-2

PREVIOUS EDITIONS ARE OBSOLETE.

P.S.—IF YOUR OUTFIT WANTS TO KNOW ABOUT YOUR RECOMMENDATION MAKE A CARBON COPY OF THIS AND GIVE IT TO YOUR HEADQUARTERS.

RECOMMENDED CHANGES TO EQUIPMENT TECHNICAL PUBLICATIONS

SOMETHING WRONG WITH THIS PUBLICATION?

THEN . . . JOT DOWN THE DOPE ABOUT IT ON THIS FORM. CAREFULLY TEAR IT OUT. FOLD IT AND DROP IT IN THE MAIL!

FROM: (PRINT YOUR UNIT'S COMPLETE ADDRESS)

DATE SENT

PUBLICATION NUMBER	PUBLICATION DATE	PUBLICATION TITLE
TM 10-4930-247-13&P	28 FEB 94	OPERATOR'S, UNIT & DIRECT SUPPORT RPSTL FOR HEMTT TANKER AIRCRAFT REFUELING SYSTEM

BE EXACT. . .PIN-POINT WHERE IT IS

PAGE NO.	PARA-GRAPH	FIGURE NO.	TABLE NO.

IN THIS SPACE TELL WHAT IS WRONG AND WHAT SHOULD BE DONE ABOUT IT:

PRINTED NAME, GRADE OR TITLE, AND TELEPHONE NUMBERS

SIGN HERE:

DA FORM 1 JUL 79 2028-2

PREVIOUS EDITIONS ARE OBSOLETE.

P.S.—IF YOUR OUTFIT WANTS TO KNOW ABOUT YOUR RECOMMENDATION MAKE A CARBON COPY OF THIS AND GIVE IT TO YOUR HEADQUARTERS.

REVERSE OF DA FORM 2028-2 AMSMC OP 103-85

FILL IN YOUR
UNITS ADDRESS

DEPARTMENT OF THE ARMY

OFFICIAL BUSINESS

NO POSTAGE
NECESSARY
IF MAILED
IN THE
UNITED STATES

BUSINESS REPLY MAIL

FIRST-CLASS PERMIT NO. 82 ROCK ISLAND IL

POSTAGE WILL BE PAID BY ROCK ISLAND ARSENAL

Director
Armament and Chemical Acquisition
and Logistics Activity
ATTN: AMSTA-AC-NML
Rock Island, IL 61201-9948

TEAR ALONG PERFORATED LINE

THE METRIC SYSTEM AND EQUIVALENTS

'NEAR MEASURE

. Centimeter = 10 Millimeters = 0.01 Meters = 0.3937 Inches
1 Meter = 100 Centimeters = 1000 Millimeters = 39.37 Inches
1 Kilometer = 1000 Meters = 0.621 Miles

'VEIGHTS

Gram = 0.001 Kilograms = 1000 Milligrams = 0.035 Ounces
1 Kilogram = 1000 Grams = 2.2 lb.
1 Metric Ton = 1000 Kilograms = 1 Megagram = 1.1 Short Tons

LIQUID MEASURE

1 Milliliter = 0.001 Liters = 0.0338 Fluid Ounces
1 Liter = 1000 Milliliters = 33.82 Fluid Ounces

SQUARE MEASURE

1 Sq. Centimeter = 100 Sq. Millimeters = 0.155 Sq. Inches
1 Sq. Meter = 10,000 Sq. Centimeters = 10.76 Sq. Feet
1 Sq. Kilometer = 1,000,000 Sq. Meters = 0.386 Sq. Miles

CUBIC MEASURE

1 Cu. Centimeter = 1000 Cu. Millimeters = 0.06 Cu. Inches
1 Cu. Meter = 1,000,000 Cu. Centimeters = 35.31 Cu. Feet

TEMPERATURE

5/9(°F - 32) = °C
212° Fahrenheit is evuivalent to 100° Celsius
90° Fahrenheit is equivalent to 32.2° Celsius
32° Fahrenheit is equivalent to 0° Celsius
9/5C° + 32 =°F

APPROXIMATE CONVERSION FACTORS

TO CHANGE	TO	MULTIPLY BY
Inches	Centimeters	2.540
Feet	Meters	0.305
Yards	Meters	0.914
Miles	Kilometers	1.609
Square Inches	Square Centimeters	6.451
Square Feet	Square Meters	0.093
Square Yards	Square Meters	0.836
Square Miles	Square Kilometers	2.590
Acres	Square Hectometers	0.405
Cubic Feet	Cubic Meters	0.028
Cubic Yards	Cubic Meters	0.765
Fluid Ounces	Milliliters	29.573
ıts	Liters	0.473
arts	Liters	0.946
allons	Liters	3.785
Ounces	Grams	28.349
Pounds	Kilograms	0.454
Short Tons	Metric Tons	0.907
Pound-Feet	Newton-Meters	1.356
Pounds per Square Inch	Kilopascals	6.895
Miles per Gallon	Kilometers per Liter	0.425
Miles per Hour	Kilometers per Hour	1.609

TO CHANGE	TO	MULTIPLY BY
Centimeters	Inches	0.394
Meters	Feet	3.280
Meters	Yards	1.094
Kilometers	Miles	0.621
Square Centimeters	Square Inches	0.155
Square Meters	Square Feet	10.764
Square Meters	Square Yards	1.196
Square Kilometers	Square Miles	0.386
Square Hectometers	Acres	2.471
Cubic Meters	Cubic Feet	35.315
Cubic Meters	Cubic Yards	1.308
Milliliters	Fluid Ounces	0.034
Liters	Pints	2.113
Liters	Quarts	1.057
'ers	Gallons	0.264
.ms	Ounces	0.035
.ograms	Pounds	2.205
Metric Tons	Short Tons	1.102
Newton-Meters	Pounds-Feet	0.738
Kilopascals	Pounds per Square Inch	0.145
'lometers per Liter	Miles per Gallon	2.354
›meters per Hour	Miles per Hour	0.621

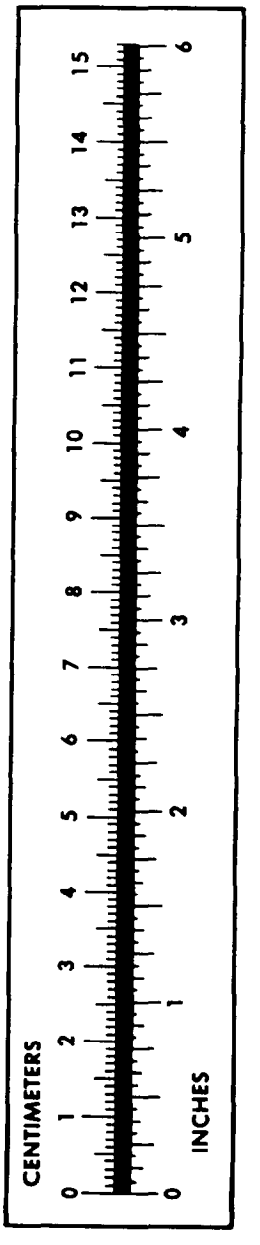

PIN: 072323-006

This fine document...

Was brought to you by me:

Liberated Manuals -- free army and government manuals

Why do I do it? I am tired of sleazy CD-ROM sellers, who take publicly available information, slap “watermarks” and other junk on it, and sell it. Those masters of search engine manipulation make sure that their sites that sell free information, come up first in search engines. They did not create it... They did not even scan it... Why should they get your money? Why are not letting you give those free manuals to your friends?

I am setting this document FREE. This document was made by the US Government and is NOT protected by Copyright. Feel free to share, republish, sell and so on.

I am not asking you for donations, fees or handouts. If you can, please provide a link to liberatedmanuals.com, so that free manuals come up first in search engines:

<A HREF=http://www.liberatedmanuals.com/>Free Military and Government Manuals</A>

- Sincerely
  Igor Chudov
  http://igor.chudov.com/
- Chicago Machinery Movers