TM 10-4930-246-13&P

TECHNICAL MANUAL

OPERATOR'S, UNIT, AND DIRECT SUPPORT MAINTENANCE MANUAL INCLUDING REPAIR PARTS AND SPECIAL TOOLS LIST (RPSTL)

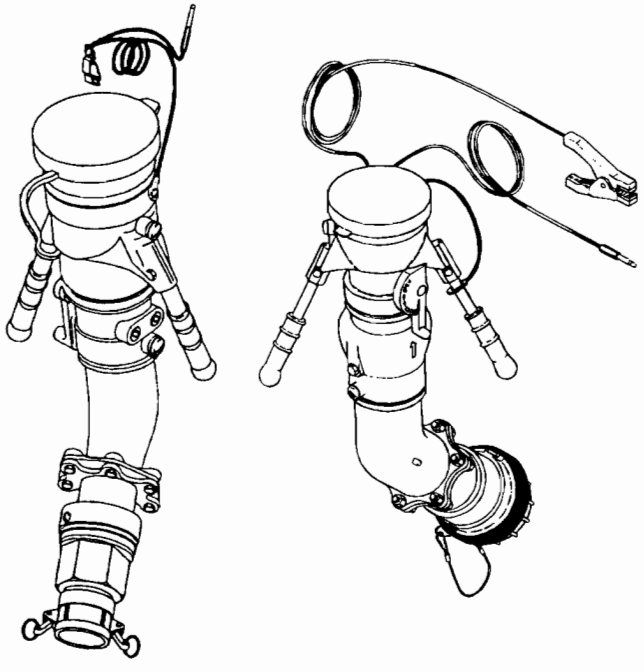

OPERATING INSTRUCTIONS	2-1
OPERATOR PREVENTIVE MAINTENANCE CHECKS AND SERVICES (PMCS)	2-2
OPERATOR TROUBLESHOOTING PROCEDURES	3-1
UNIT MAINTENANCE INSTRUCTIONS	4-1
DIRECT SUPPORT MAINTENANCE INSTRUCTIONS	5-1
MAINTENANCE ALLOCATION CHART	B-1
UNIT AND DIRECT SUPPORT MAINTENANCE REPAIR PARTS AND SPECIAL TOOLS LIST (RPSTL)	C-1

D-1 NOZZLE

MODEL D1N-1
NSN 4930-01-369-9821

MODEL D-1R
P/N 64349F4HXY
NSN 4930-01-440-1085

Distribution Statement A. Approved for public release; distribution is unlimited.

HEADQUARTERS, DEPARTMENT OF THE ARMY
7 February 1995

WARNING

Do not use decontamination spray on personnel. It could cause personal injury.

WARNING

NO SMOKING

Allow no smoking within 50 ft. of any facility or device storing or handling petroleum fuels. Erect "No Smoking" signs to this effect.

WARNING

VEHICLE ENGINES OFF WHEN FILLING VEHICLE WITH FUEL

Vehicle engines should be shut down when filling the vehicle with fuel to minimize the risk of fire or explosion.

WARNING

BONDING

All equipment, devices, machinery, hoses and piping must be bonded to avoid static electricity discharge.

WARNING

DISCONNECT VEHICLE FROM HOSELINES

Make sure hoselines are disconnected from vehicles at loading and unloading stations before vehicle is moved.

WARNING

LIQUID FUEL ACCUMULATION

The accumulation of liquid fuel, or hot lubricating oil is a fire hazard. Apply no smoking rules within 50 ft. of any fuel accumulation. Shut down operation.

WARNING

FUEL SATURATED SOIL

Fuel saturated soil is a fire hazard. Do not allow unnecessary personnel in the area. Do not allow smoking within 50 ft. of the area.

WARNING

LIQUID FUEL LEAKS

Promptly correct any fuel leakage that causes an accumulation of fuel on any surface. If it cannot be corrected safely while in operation, shut down and make corrections to stop the leak. Make a list of any minor leaks that cannot be corrected in operation and make repairs at the first shut down opportunity.

WARNING

EYE INJURY

- Liquid petroleum fuels will cause severe irritation if in contact with eyes. Always wear safety goggles when doing work that might result in getting fuel in the eyes.
- If eyes are subjected to the fuel, flush and wash them promptly and thoroughly with fresh water.

WARNING

CHEMICAL BURNS

Liquid petroleum fuels can cause chemical burns or severe skin irritation. Be safe, wear approved gloves and long sleeves when the possibility of getting fuels on bare skin exists. When fuel comes in contact with the skin, wash with soap and water as soon as possible.

FIRST AID

Refer to FM 21-11.

WARNING

DRY CLEANING SOLVENT
P-D-680, TYPE II

- Combustible, do not use near welding areas, near open flames or on very hot surfaces.
- Use only with adequate ventilation. Avoid prolonged or repeated breathing of vapors.
- Do not smoke when using it.
- Use protective creams, wear apron and goggles (or face shield) to protect the skin.
- Store in approved metal safety containers.

CHANGE

NO. 1

HEADQUARTERS
DEPARTMENT OF THE ARMY
WASHINGTON, D.C., 1 MARCH 1999

Operator's, Unit, and Direct Support Maintenance Manual
Including Repair Parts and Special Tools List (RPSTL)

D-1 NOZZLE

MODEL D1N-1
NSN 4930-01-369-9821

MODEL D-1R
P/N 64349F4HXY
NSN 4930-01-440-1085

DISTRIBUTION STATEMENT A: Approved for public release; distribution is unlimited.

TM 10-4930-246-13&P, 7 February 1995 is changed as follows:

1. Remove and insert pages as indicated below. New or changed text material is indicated by a vertical bar in the margin. An illustration change is indicated by a miniature pointing hand.
2. The title has changed.

Remove pages	Insert pages
i through iv	i through iv
v and 1-0	v and 1-0
1-1 through 1-6	1-1 through 1-7/(1-8 blank)
2-1 and 2-2	2-1 and 2-2
2-11 and 2-12	2-11 and 2-12
-----	2-12.1 through 2-12.5/(2-12.6 blank)
-----	4-2.1/(4-2.2 blank)
-----	4-6.1 through 4-6.3/(4-6.4 blank)
-----	5-9 through 5-14
B-3 through B-5/(B-6 blank)	B-3 through B-5/(B-6 blank)
C-1 and C-2	C-1 and C-2
C-7 and C-8	C-7 and C-8
C-11 and C-12	C-11 and C-12
C-17 and C-18	C-17 through C-18G/(C-18H blank)
C-21 through C-26	C-21 through C-27/(C-28 blank)
F-1/(F-2 blank)	F-1/(F-2 blank)
J-1/(J-2 blank)	J-1/(J-2 blank)
Index-1 and Index-2	Index-1 and Index-2
Cover	Cover

3. Retain this sheet in front of manual for reference purposes.

TM 10-4930-246-13&P

C1

By Order of the Secretary of the Army:

DENNIS J. REIMER
General, United States Army
Chief of Staff

Official:

JOEL B. HUDSON
Administrative Assistant to the
Secretary of the Army
05762

DISTRIBUTION:
To be distributed in accordance with DA Form 12-99, block no. 0003, requirements for TM 10-4930-246-13&P.

TECHNICAL MANUAL
TM 10-4930-246-13&P

HEADQUARTERS
DEPARTMENT OF THE ARMY
WASHINGTON, D.C., 7 FEB 1995

OPERATOR'S UNIT AND DIRECT SUPPORT MAINTENANCE MANUAL INCLUDING REPAIR PARTS AND SPECIAL TOOLS LIST (RPSTL)

D-1 NOZZLE

MODEL D1N-1
(NSN 4930-01-369-9821)

MODEL D-1R
P/N 64349CF4HXY
(NSN 4930-01-440-1085)

REPORTING ERRORS AND RECOMMENDING IMPROVEMENTS

You can help improve this publication. If you find any mistakes or if you know of a way to improve the procedures, please let us know. Submit your DA Form 2028-2 (Recommended Changes to Equipment Technical Publications), through the Internet, on the Army Electronic Product Support (AEPS) website. The Internet address is http://aeps.ria.army.mil. If you need a password, scroll down and click on "ACCESS REQUEST FORM". The DA Form 2028 is located in the ONLINE FORMS PROCESSING section of the AEPS. Fill out the form and click on SUBMIT. Using, this form on the AEPS will enable us to respond quicker to your comments and better manage the DA Form 2028 program. You may also mail, fax or email your letter, DA Form 2028, or DA Form 2028-2 direct to: Commander, U.S. Army Tank - automotive and Armaments Command, ATTN: AMSTA-AC-NML, Rock Island, IL 61299-7630. The email address is amsta-ac-nml@ria.army.mil The fax number is DSN 793-0726 or Commercial (309)782-0726.

DISTRIBUTION STATEMENT A: Approved for public release; distribution is unlimited.

TABLE OF CONTENTS

		Page
CHAPTER 1	INTRODUCTION	1-1
Section I	General Information	1-1
Section II	Equipment Description	1-2
Section III	Principles of Operation	1-5
CHAPTER 2	OPERATING INSTRUCTIONS	2-2
Section I	Description and Use of Operator's Controls and Indicators	2-2
Section II	Operator Preventive Maintenance Checks and Services (PMCS)	2-2
Section III	Operation Under Usual Conditions	2-12.5/(2-12.6 blank)
Section IV	Operation Under Unusual Conditions	2-16
CHAPTER 3	OPERATOR MAINTENANCE INSTRUCTIONS	3-1
Section I	Lubrication Instructions	3-1
Section II	Operator Troubleshooting Procedures	3-1
Section III	Operator's Maintenance Procedures	3-1

TABLE OF CONTENTS - continued

		Page
CHAPTER 4	UNIT MAINTENANCE INSTRUCTIONS	4-1
Section I	Repair Parts , Tools, Special Tools, Test Measurement, and Diagnostic Equipment (TMDE), and Support Equipment	4-1
Section II	Service Upon Receipt	4-2
Section III	Unit Preventive Maintenance Checks and Services (PMCS)	4-3
Section IV	Unit Troubleshooting Procedures	4-3
Section V	Unit Maintenance Procedures	4-3
Section VI	Preparation for Storage or Shipment	4-11
CHAPTER 5	DIRECT SUPPORT MAINTENANCE INSTRUCTIONS	5-1
Section I	Repair Parts, Tools, Special Tools, Test Measurement, and Diagnostic Equipment (TMDE), and Support Equipment	5-1
Section II	Direct Support Troubleshooting Procedures	5-1
Section III	Direct Support Maintenance Procedures	5-1
APPENDIX A	REFERENCES	A-1
APPENDIX B	MAINTENANCE ALLOCATION CHART	A-1
Section I	Introduction	B-1
Section II	Maintenance Allocation Chart for D1N-1 and D-1R Nozzles	B-4
Section III	Tools and Test Equipment Requirements For D1N-1 and D-1R Nozzles	B-5
Section IV	Remarks For D1N-1 and D-1R Nozzles	B-5
APPENDIX C	UNIT AND DIRECT SUPPORT MAINTENANCE REPAIR PARTS AND SPECIAL TOOLS LIST (RPSTL)	C-1
Section I	Introduction	C-2
Section II	Repair Parts List	C-10
Section III	Special Tools List	C-18
Section IV	Cross Reference List	C-20
APPENDIX D	COMPONENTS OF END ITEM (COEI) AND BASIC ISSUE ITEMS (BII) LIST	D-1
Section I	Introduction	D-1
Section II	Components of End Item	D-2
Section III	Basic Issue Items	D-2
APPENDIX E	ADDITIONAL AUTHORIZATION LIST (AAL)	E-1
APPENDIX F	EXPENDABLE AND DURABLE ITEMS LIST	F-1
Section I	Introduction	F-1
Section II	Expendable and Durable Items List	F-1
APPENDIX G	LUBRICATION INSTRUCTIONS	G-1
APPENDIX H	ILLUSTRATED LIST OF MANUFACTURED ITEMS	H-1

TABLE OF CONTENTS - continued

APPENDIX I TORQUE LIMITS I-1

APPENDIX J MANDATORY REPLACEMENT PARTS J-1

GLOSSARY . . . . . Glossary -1

Section I Abbreviations . . . . . Glossary -1
Section II Definition of Unusual Terms . . . . . Glossary -1

ALPHABETICAL INDEX . . . . . Index -1

LIST OF TABLES

Table	Title	Page
2-1	Operator Preventive Maintenance Checks and Services for D-1 Nozzle	2-6
2-1.1	Operator Preventive Maintenance Checks and Services for D-1R Nozzle	2-12

LIST OF ILLUSTRATIONS

Figure	Title	Page
1-0	D1N-1 and D-1R Nozzles	1-0
1-1	Location And Description of Major Components (D1N-1)	1-3
1-1.1	Location And Description of Major Components (D-1R)	1-4
1-2	Safety Interlocks	1-6
2-1	Operator's Controls and Indicators	2-2
2-2	Operating Connection Items	2-13
2-3	Nozzle Marking	2-15
4-1	Nozzle Components (D1N-1)	4-2
4-1.1	Nozzle Components (D-1R)	4-2.1
4-2	Camlock Disconnect Assembly Removal	4-4
4-3	Camlock Disconnect Assembly Disassembly	4-5
4-3.1	Repair of Two-Inch Non-Valved Screened Unisex Coupling	4-6.3
4-4	Inlet Elbow	4-7
4-5	Bonding Cable	4-9
4-6	Handles and Covers	4-10
5-1	Nozzle Body	5-3
5-2	Adapter	5-4
5-3	Plate and Lever Alinement	5-5
5-4	Continuity Clip Installation	5-8
5-5	D-1R Nozzle Assembly	5-10
5-6	45 PSI Hose End Regulator	5-12
C-1	Camlock Disconnect Assembly	C-10
C-1.1	Coupling, Unisex 2-Inch Non-Valved	C-11A
C-2	Inlet Elbow Assembly	C-12
C-3	Grounding Cable, Handle,and Dust Cap	C-14
C-4	Nozzle Body Assembly	C-16
C-4.1	45 PSI Hose End Regulator	C-17A
C-5	Special Tools	C-18

HOW TO USE THIS MANUAL

Be sure to read all Warnings before using your equipment.

This manual contains instructions for operation and maintenance of the D-l Nozzle.

MANUAL OVERVIEW

a. Index Tabs.

Notice the front cover index of this manual. It lists the most important areas of the manual and guides you to those sections. Follow the black mark on the cover index edge through the pages to the edge mark on the section you want. The subjects on the front cover index are also highlighted in the table of contents by hoxes. A detailed alphabetical index is located at the back of this manual.

b. Contents.

The following gives you a summary of each chapter and appendix. Before beginning a maintenance task, you must familiarize yourself with the entire procedure.

- Chapter 1 - Introduces you to the equipment and gives you information such as weight, dimensions, abbreviations used and information on how the unit works.
- Chapter 2 - Provides information necessary to identify and use the equipment. Operating instructions in this chapter tell you how to use the equipment in both usual and unusual weather conditions.
- Chapter 3 - Provides operator troubleshooting procedures for identifying equipment malfunctions and maintenance procedures for performing operator maintenance tasks.
- Chapter 4 - Provides unit maintenance personnel with troubleshooting procedures for identifying equipment malfunctions and maintenance procedures for repairing defective equipment.
- Chapter 5 - Provides direct support maintenance personnel with maintenance instructions for performing repairs on equipment as authorized by the maintenance allocation chart.
- Appendix A - Provides a list of frequently used forms and publications referenced or used in this manual.
- Appendix B - The maintenance allocation chart identifies repairable components and the maintenance level authorized to perform the repairs.
- Appendix C - Lists and illustrates a breakdown of the equipment components for repair purposes as well as any special tools required.
- Appendix D - Lists components that are not mounted on the equipment, but are required to make the unit functional.
- Appendix E - Lists additional equipment authorized for your unit for use with the D-l Nozzle.
- Appendix F - Provides you with information about expendable supplies such as sealants, lubricants, chemicals, etc. that are used when operating or maintaining the equipment.
- Appendix G - Provides you with information about the equipment lubrication maintenance.
- Appendix H - Lists and illustrates details for manufacturing items required for maintenance or repair of the equipment.
- Appendix I - Provides necessary torque specifications required for the equipment.

- Appendix J - Provides a list of parts that must be replaced during maintenance of the equipment.
- Glossary - Lists terms and abbreviations used in this manual and their definitions.
- Index - Lists subject matter contained in manual in alphabetical order.

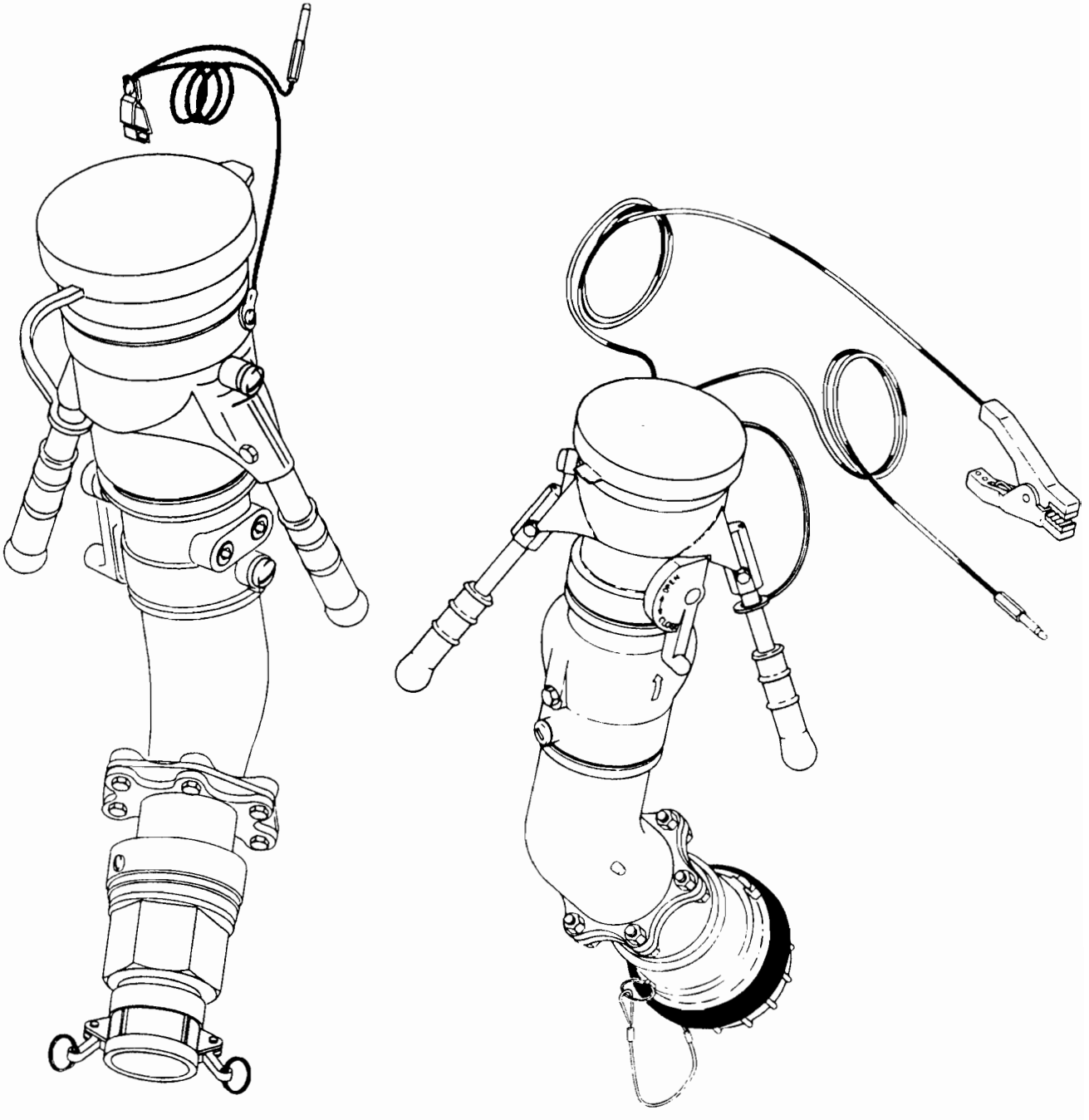

D1N-1 D-1R

Figure 1-0. D1N-1 and D-1R Nozzles

CHAPTER 1
INTRODUCTION

Section I. GENERAL INFORMATION

1-1. SCOPE.

a. Type of Manual. Operator's and Direct Support Maintenance Manual with Repair Parts and Special Tools List (RPSTL).

b. Equipment Name and Model Number. D-1 Nozzle, model numbers D1N-1 and D-1R.

c. Purposes of Equipment. The nozzle covered by this manual is a 2 1/2 inch (6.35) pressure fueling nozzle that has been qualified to MIL-N-5877. The nozzle is designed to mate with adapters conforming to MS24484 or equivalent.

1-2. MAINTENANCE FORMS AND PROCEDURES.

Department of the army forms and procedures used for equipment maintenance will be those prescribed by DA Pam 738-750 as contained in the Maintenance Management Update

1-3. CORROSION PREVENTION AND CONTROL (CPC).

Corrosion Prevention Control (CPC) of Army materiel is a continuing concern. It is important that any corrosion problems with this item be reported so that the problem can be corrected and improvements can be made to prevent the problem in future items. While corrosion is typically associated with rusting of metals, it can also include deterioration of other materials, such as rubber and plastic. Unusual cracking, softening, swelling, or breaking of these materials may be a corrosion problem. If a corrosion problem is identified, it can be reported using Standard Form 368, Product Quality Deficiency Report. Use of keyword such as " corrosion ," " rust," " deterioration," or " cracking " will ensure that the information is identified as a CPC problem. The form should be submitted to the address specified in DA PA 738-750.

1-4. DESTRUCTION OF ARMY MATERIEL TO PREVENT ENEMY USE.

Methods and/or procedures for the destruction of Army materiel to prevent enemy use are covered in TM 750-244-3.

1-5. REPORTING EQUIPMENT IMPROVEMENT RECOMMENDATIONS (EIR).

If your D-1 nozzle needs improvement, let us know. Send us an EIR. You, the user, are the only one who can tell us what you don't like about your equipment. Let us know why you don't like the design or performance. Put it on an SF 368 (Product Quality Deficiency Report). Mail it to us at Commander, U.S. Army Tank-Automotive and Armaments Command, ATTN: AMSTA-TR-E/MPA Warren, Mi. 48397-50000. We will send you a reply.

Section II. EQUIPMENT DESCRIPTION

1-6. EQUIPMENT CHARACTERISTICS, CAPABILITIES, AND FEATURES.

a. Lightweight and rugged.

b. Modular construction.

c. Equipped with grounding cable.

d. Low pressure drop, under 7 psi at 600 US gpm (corrected).

e. Self-adjusting pressure loaded nose seal. No mechanical adjustments or springs used. Leak free under extreme side loads, worn adapters and extreme temperatures.

f. Nose seal can be changed with minimum disassembly.

g. Lead-in ramps of stainless steel for longer life.

h. Positive mechanical interlock prevents fuel flow until nozzle is secured to aircraft adapter. Nozzle can not be disconnected until closed.

i. Flow control handle fully protected from damage.

j. Flow control handle of high strength Zinc-aluminum.

k. Bicycle-type handles for ease of operation.

l. Inlet body includes a 45° elbow.

m. Includes a swivel disconnect to ease connection. Swivel is independent of quick disconnect coupling.

n. Connects to 3-lug international standard aircraft adapter.

o. A hose end regulator on the D-1R nozzle assembly provides a relatively constant pressure at its outlet to control flow of fuel into the aircraft.

1-7. LOCATION AND DESCRIPTION OF MAJOR COMPONENTS.

Major components of the D1N-1 Nozzle are shown in figure 1-1.

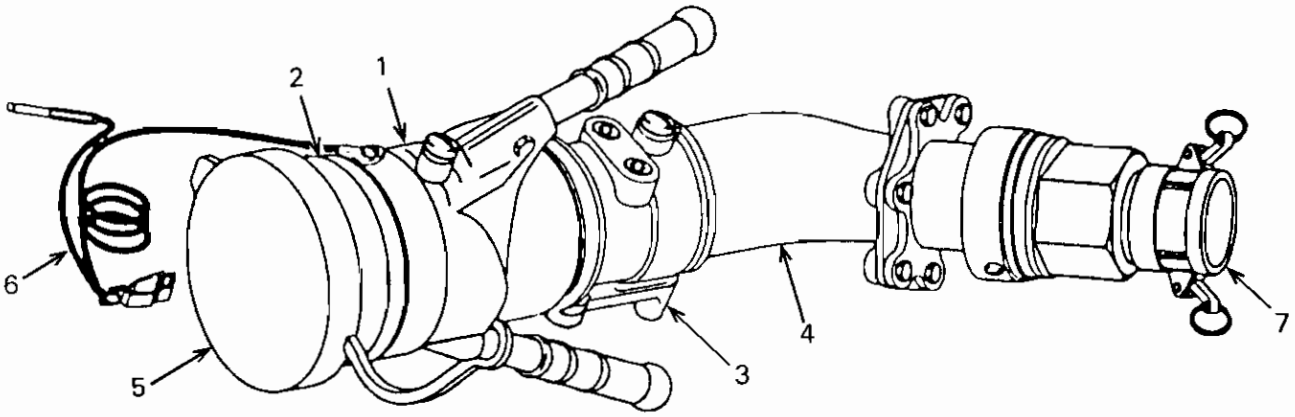

Figure 1-1. Location and Description of Major Components (D1N-1)

a. Nozzle Body. The nozzle body (1) contains the poppet assembly and fuel strainer.

b. Nozzle Collar. The nozzle collar (2) mates with aircraft receptacle. The bumper on face of collar and the internal slots allow positioning of the nozzle before poppet valve can be opened.

c. Handle Assembly. The handle assembly (3) allows the poppet assembly to be opened and closed.

d. Swivel Elbow. The swivel elbow (4) rotates with the nozzle engaged allowing the hose to be positioned free of kinks or twists.

e. Cover. A cover (5) is furnished to cover the nozzle outlet when not connected to a system for servicing.

f. Ground cable. A ground cable (6) is provided for grounding and bonding the nozzle to the aircraft prior to connection.

g. Coupling Assembly. The coupling assembly (7) allows the nozzle assembly to be connected to and disconnected from a fuel service source.

1-8. LOCATION AND DESCRIPTION OF MAJOR COMPONENTS.

Major components of the D-1R Nozzle are shown in figure 1-1.1

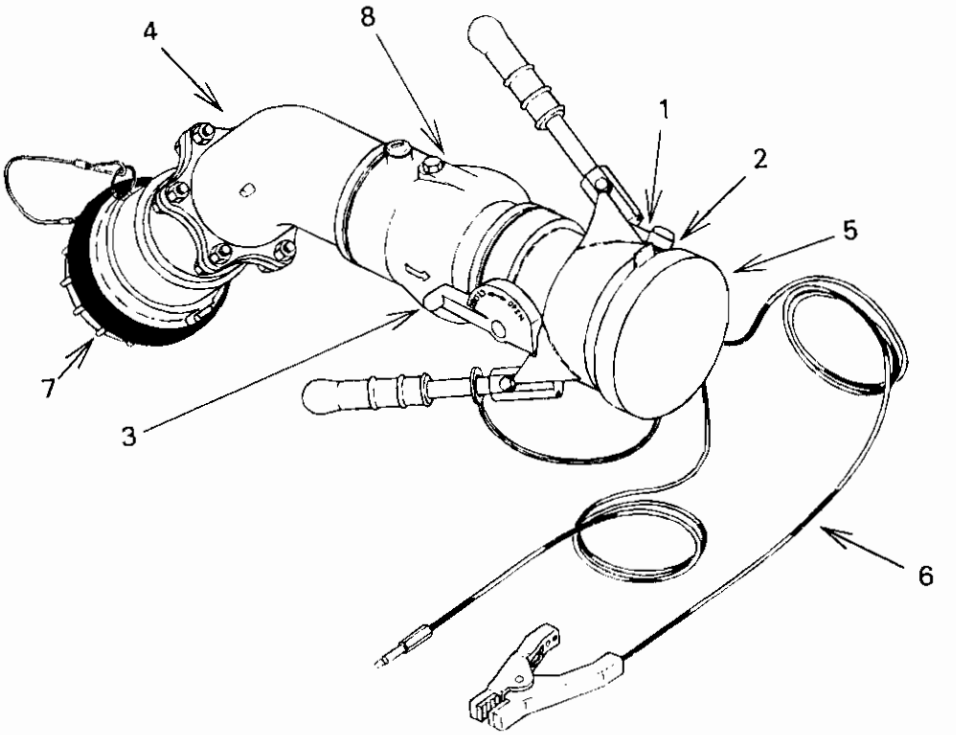

Figure 1-1.1 Location and Description of Major Components (D-1R)

a. Nozzle Body. The nozzle body (1) contains the poppet assembly and fuel strainer.

b. Nozzle Collar. The nozzle collar (2) mates with aircraft receptacle. The bumper on face of collar and the internal slots allow positioning of the nozzle before poppet valve can be opened.

c. Handle Assembly. The handle assembly (3) allows the poppet assembly to be opened and closed.

d. Swivel Elbow. The swivel elbow (4) rotates with the nozzle engaged allowing the hose to be positioned free of kinks or twists.

e. Cover. A cover (5) is furnished to cover the nozzle outlet when not connected to a system for servicing.

f. Ground cable. A ground cable (6) is provided for grounding and bonding the nozzle to the aircraft prior to connection.

g. Coupling Assembly. The coupling assembly (7) allows the nozzle assembly to be connected to and disconnected from a fuel service source.

h. Hose End Regulator. The hose end regulator (8) provides relatively constant pressure of 45 psi. It responds to increases in pressure within the aircraft fuel manifold caused by closure of the aircraft's fuel tank level control valves to either maintain desired pressure or to close to prevent an excessive "surge" pressure from being sensed within the aircraft.

1-9. EQUIPMENT DATA.

a. General Information.

Model Number	D1N-1
National Stock Number	4930-01-369-9821
Model Number	D-1R
National Stock Number	4930-01-440-1085

b. Dimensions.

Length	20.25 in. (51.44 cm)
Width across grips	2.80 in. (32.51 cm)
Diameter of servicing inlet	2.50 in. (6.35 cm)

c. Weight	10.5 lb (4.8 kg) D1N-1 12 lbs (5.4 kg) D-1R
d. Operating Temperature Range	-35° F to +150° F (-37° C to +66° C)
e. Flow Rate	600 gpm (38 1/s)
f. Operating Pressure	0 - 200 psi (0 - 1380 kPa)

Section III. PRINCIPLES OF OPERATION

1-10. GENERAL PRINCIPLES OF OPERATION.

The D1N-1 or D-1R Nozzle mates with the aircraft adapter for fuel servicing. The clip and plug ground cable connections provide for grounding and bonding the nozzle to the aircraft prior to connection and during servicing. The nozzle must align with the aircraft adapter before nozzle collar is turned and secured. The poppet handle assembly can now be turned to the open position. The nozzle assembly is now firmly attached and cannot be removed. After servicing is complete, the poppet handle assembly is returned to the closed position and the collar turned releasing the nozzle from the aircraft. The collar also prevents the poppet handle from being turned to the open.

1-11. SAFETY INTERLOCKS.

a. Three spring loaded collar lock pins (1) engage three cutouts (arched notches) in the flange of the collar (2). When the collar is in the full disengaged position, the collar lock pins prevent accidental rotation of the collar. Two of the three cutouts in the collar are normally elongated more than the third and are used as a visual wear guide.

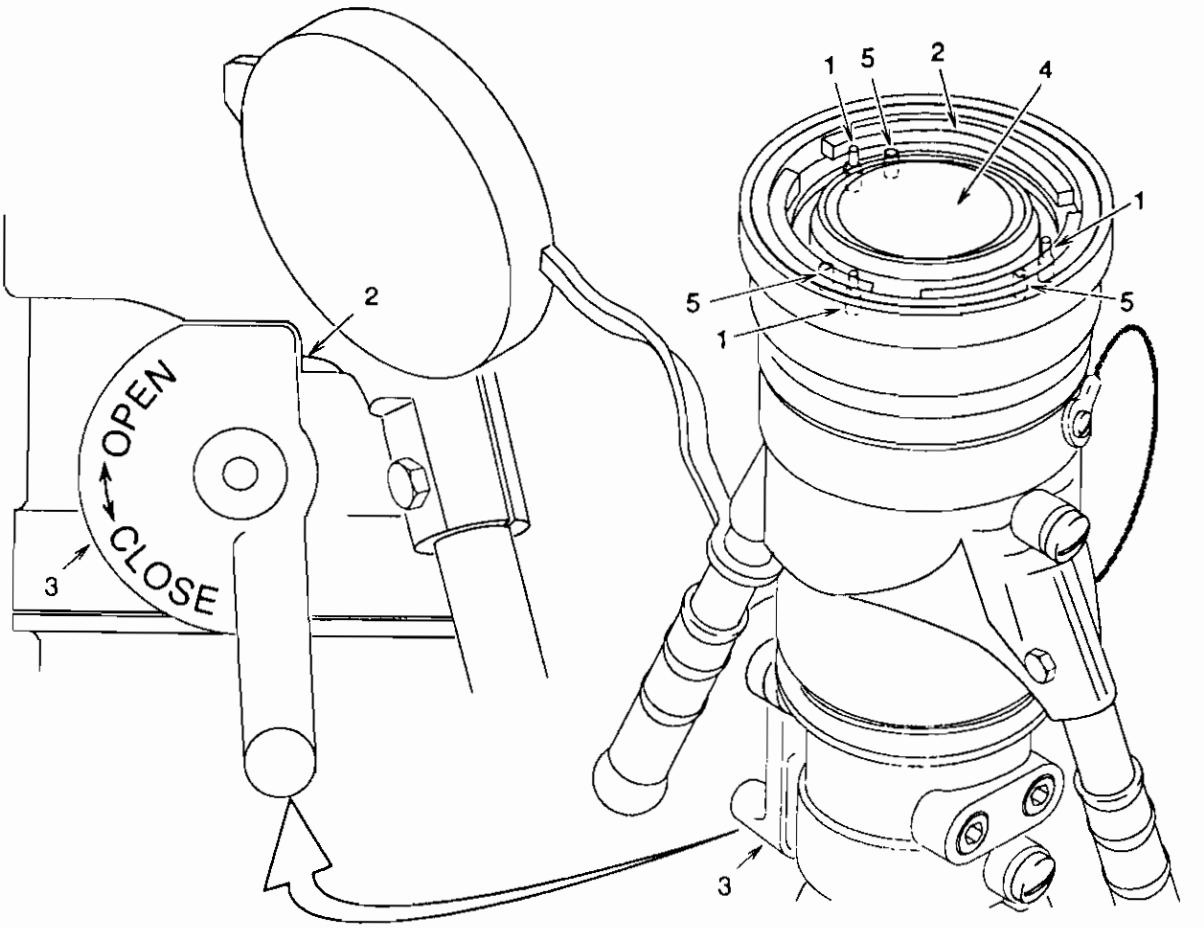

Figure 1-2. Safety Interlocks

b. With collar(2) locked in disengaged position, the flat portion of a ramp on the collar is positioned over a flat on the lever (3) and prevents accidentally opening the poppet (4).

c. Three index pins (5) mate with three slots in a serviceable adapter flange so that collar (2) aligns with flange lugs during engagement.

d. On a disengaged nozzle a portion of the edge of the lever (3) is beneath the flat portion on a ramp on the collar (2). The collar ramp prevents rotation of the lever and accidentally opening the poppet (4).

e. When collar (2) is fully engaged to a serviceable adapter, the collar ramp clears the lever (3) and permits rotation to the open position.

1-11. SAFETY INTERLOCKS. - continued

f. With the lever (3) full open, the round portion of the lever prevents rotation of the collar (2) to the disengage direction.

g. These interlocks prevent accidentally opening the poppet (4) when the nozzle is disengaged or accidentally disengaging the nozzle when the poppet is open.

h. The poppet (4) linkage is over center at each extreme of travel (lever (3) full open against internal mechanical stop or full closed against internal mechanical stop).

i. Internal pressure against a closed poppet (4), when the linkage is against the closed mechanical stop, provides a force only in the closed direction. This is due to the over center linkage design.

j. With the lever (3) in the full open/mechanical stop position, the 50 lb force applied by the adapter poppet spring provides a force only in the open direction. This is due to the over center linkage design.

CHAPTER 2
OPERATING INSTRUCTIONS

			PAGE
Section I		DESCRIPTION AND USE OF OPERATOR'S CONTROLS AND INDICATORS	2-2
	2-1	GENERAL	2-2
Section II		OPERATOR PREVENTIVE MAINTENANCE CHECKS AND SERVICES (PMCS)	2-2
	2-2	GENERAL	2-2
	2-3	PMCS PROCEDURES	2-3
	2-4	LEAKAGE DEFINITIONS FOR OPERATOR PMCS	2-4
Section III		OPERATION UNDER USUAL CONDITIONS	2-12.5/(2-12.6 blank)
	2-5	ASSEMBLY AND PREPARATION FOR USE	2-12.5/(2-12.6 blank)
	2-6	INITIAL ADJUSTMENTS, CHECKS, AND SELF-TEST	2-12.5/(2-12.6 blank)
	2-7	OPERATING PROCEDURES	2-12.5/(2-12.6 blank)
	2-8	DECALS AND INSTRUCTION PLATES	2-15
Section IV		OPERATION UNDER UNUSUAL CONDITIONS	2-16
	2-9	EXTREME COLD	2-16
	2-10	DUSTY OR SANDY ENVIRONMENT AND SALT AIR OR SEA SPRAY	2-16
	2-11	NUCLEAR, BIOLOGICAL, AND CHEMICAL (NBC) DECONTAMINATION	2-16

Section I. DESCRIPTION AND USE OF OPERATOR'S CONTROLS AND INDICATORS

2-1. GENERAL.

The only operator controls are the handles and the OPEN/CLOSE lever. The only items that could be considered indicators are the collar lock pins. See paragraph 1-9 and Table 2-1 PMCS for a better understanding of the collar lock pins.

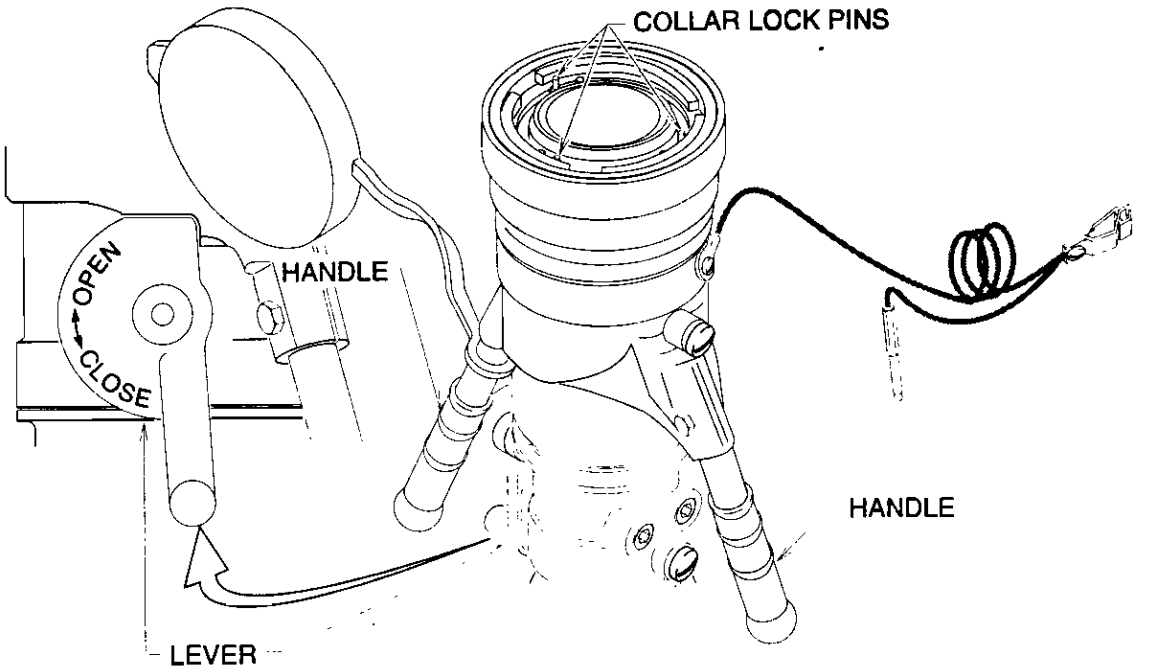

Figure 2-1. Operator's Controls and Indicators

Section II. OPERATOR PREVENTIVE MAINTENANCE CHECKS AND SERVICES (PMCS)

2-2. GENERAL.

Preventive Maintenance Checks and Services means systematic caring, inspection, and servicing of equipment to keep it in good condition and ready to use. As the operator, your mission is to:

(1) Be sure to perform your PMCS each time you use the Nozzle.

(2) Do your "Before" PMCS just before you use the Nozzle.

(3) Do your "During" PMCS while you use the nozzle.

(4) Do your "After" PMCS right after using the Nozzle.

(5) Use DA Form 2404 (Equipment Inspection and Maintenance Worksheet) to record any faults that you discover before, during, or after use, unless you can fix the fault. You DO NOT need to record faults that you fix.

2-3. PMCS PROCEDURES.

a. Your Preventive Maintenance Checks and Services, table 2-1, lists inspections and care required to keep the nozzle in good operating condition.

b. The "Interval" column of table 2-1 tells you when to do a certain check or service.

c. The "Procedure" column of table 2-1 tells you how to do required checks and services.

NOTE

Terms "ready/available" and "mission capable" refer to same status: Equipment is on hand and ready to perform its mission. (See DA Pam 738-750.)

d. The "Equipment Is Not Ready/Available If:" column in table 2-1 tells you when your equipment is nonmission capable and why it cannot be used.

e. If the nozzle does not perform as required, refer to Chapter 3, Section II, Troubleshooting Procedures.

f. If anything looks wrong and you can't fix it, write it on your DA From 2404. IMMEDIATELY report it to your supervisor.

g. When you do your PMCS, you will always need a rag or two. Following are checks that are common to the nozzle:

(1) Keep It Clean. Dirt, grease, oil, and debris only get in the way and may cover up a serious problem. Clean as you work and as needed.

(2) Bolts, Nuts, and Screws. Check them all for obvious looseness, missing, bent, or broken condition. You can't try them all with a tool, but look for chipped paint, bare metal, or rust around bolt heads. If you find a bolt, nut, or screw you think is loose, tighten it or report it to your supervisor.

(3) Hoses and Fluid Lines. Look for wear, damage, and leaks, and make sure clamps and fittings are tight. Wet spots show leaks, but a stain around a fitting or connector can also mean a leak. If a leak comes from a loose fitting or connector, tighten it. If something is broken or worn out, report it to your supervisor.

h. When you check for "operating condition", you look at the component to see if it's serviceable.

2-4. LEAKAGE DEFINITIONS FOR OPERATOR PMCS.

WARNING

LIQUID FUEL ACCUMULATION

The accumulation of liquid fuel, or hot lubricating oil is a fire hazard. Apply no smoking rules within 50 ft. of any fuel accumulation. Shut down operation.

WARNING

FUEL SATURATED SOIL

Fuel saturated soil is a fire hazard. Do not allow unnecessary personnel in the area. Do not allow smoking within 50 ft. of the area.

WARNING

LIQUID FUEL LEAKS

Promptly correct any fuel leakage that causes an accumulation of fuel on any surface. If it cannot be corrected safely while in operation, shut down and make corrections to stop the leak. Make a list of any minor leaks that cannot be corrected in operation and make repairs at the first shut down opportunity.

WARNING

EYE INJURY

- Liquid petroleum fuels will cause severe irritation if in contact with eyes. Always wear safety goggles when doing work that might result in getting fuel in the eyes.
- If eyes are subjected to the fuel, flush and wash them promptly and thoroughly with fresh water.

WARNING

CHEMICAL BURNS

Liquid petroleum fuels can cause chemical burns or severe skin irritation. Be safe, wear approved gloves and long sleeves when the possibility of getting fuels on bare skin exists. When fuel comes in contact with the skin, wash with soap and water as soon as possible.

WARNING

Any fuel leak is a fire hazard. Shut down operation if leak is evident.

Any leak of fuel will be cause to shut down operation immediately. If leak cannot be repaired, notify your supervisor.

WARNING

NO SMOKING

Allow no smoking within 50 ft. of any facility or device storing or handling petroleum fuels. Erect "No Smoking" signs to this effect.

WARNING

Vehicle engines should be shut down when filling the vehicle with fuel to minimize the risk of fire or explosion.

WARNING

GROUNDING

All equipment, devices, machinery, hoses and piping must be grounded to avoid static electricity discharge.

WARNING

DISCONNECT VEHICLE FROM HOSELINES

Make sure hoselines are disconnected from vehicles at loading and unloading stations before vehicle is moved.

Table 2-1. Operator Preventive Maintenance Checks and Services for D-1 Nozzle

Item No.	Interval	Location: Item to Check/Service	Procedure	Not Fully Mission Capable If:
1	Before	Camlock Disconnect Assembly	Check camlock casting for any deformation, cracks, or internal gouges.	Any damage that would interfere with installation or cause leaks.
	Before		Check camlock levers for smooth operation and damaged or missing lever arms or rings.	Camlock levers binding, broken, or missing.
	Before		Check that gasket is in place and not damaged.	Gasket missing or damaged.

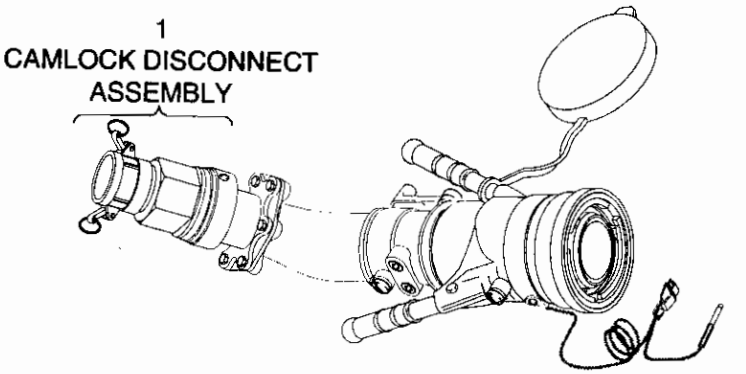

2	Before	Strainer and Quick Disconnect Male Adapter Assembly	Check quick disconnect assembly for cracks.	Damaged enough to cause leaking or interfere with operation.
	Before		Check for missing or loose flange hardware or lock wire.	Flange hardware or lock wire missing or loose.
	Before		Check strainer for obstructions or tear.	Strainer obstructed or torn.

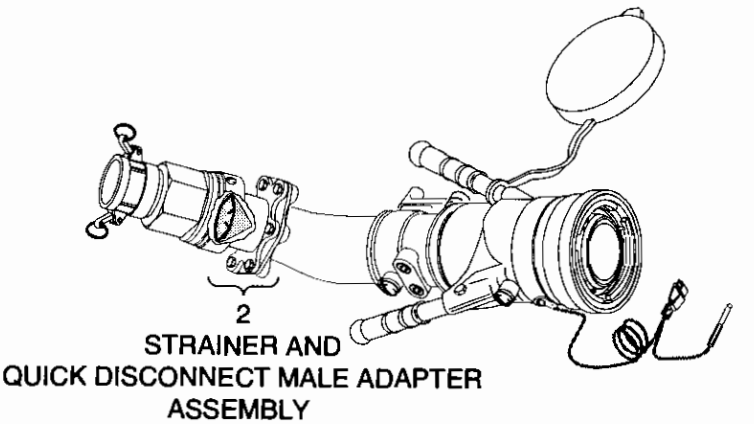

Item No.	Interval	Location Item to Check/Service	Procedure	Not Fully Mission Capable If:
3	Before	Inlet Elbow Assembly	Check elbow for cracks.	Damaged enough to cause leaking or interfere with operation.
4	Before	Grounding Cable Assembly	Check that grounding cable, bonding plug, and grounding clip are in place and in good condition.	Grounding cable, bonding plug, and grounding clip are broken or missing.
5	Before	Handles	Check that handles are in place and in good condition.	Handles missing or damaged enough to prevent operation.

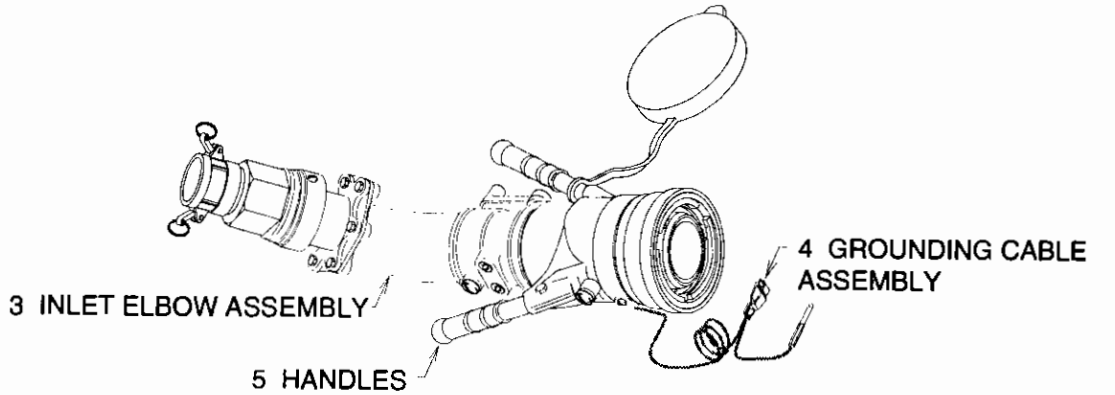

6	Before	Nozzle Body Assembly	Inspect connection end and verify that index pins are intact, in place, and not excessively worn or damaged.	Index pins or collar lock pins missing, worn or damaged.

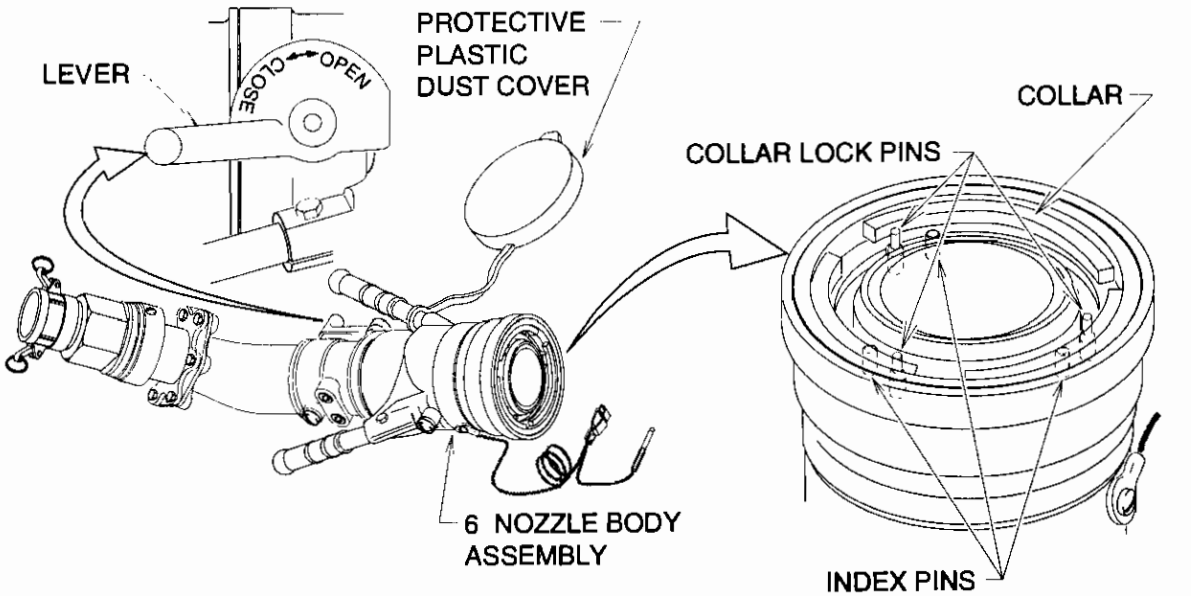

Table 2-1. Operator Preventive Maintenance Checks and Services for D-1 Nozzle - continued

Item No.	Interval	Location: Item to Check/Service	Procedure	Not Fully Mission Capable If:
6	Before	Nozzle Body Assembly - continued	Verify that all three collar lock pins are intact, undamaged and are extended and engage all three cutouts in the collar and physically prevent collar rotation. If the collar lock pins are not extended and engaged in all three cutouts in the collar, the operator should squeeze the lever and handle grip together while observing the connecting end of the nozzle. This should cause the collar lock pins to spring into the cutouts in the collar.	Index pins are not extended to engage all three collar cutouts.
	Before		Attempt to open the nozzle with the lever.	Nozzle opens.
7	During	Nozzle Assembly	Check for leaks.	Any leak found.

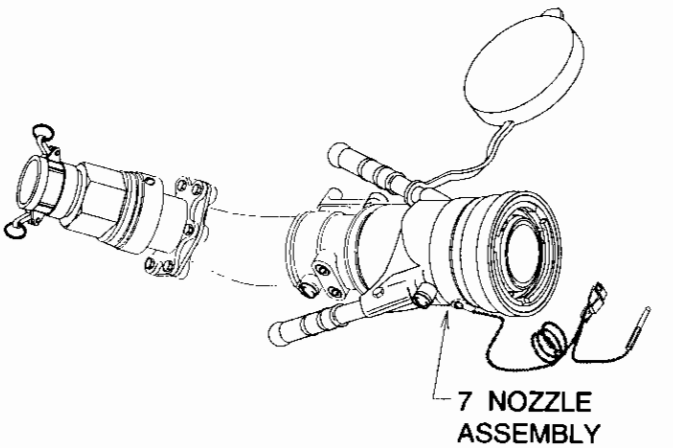

Item No.	Interval	Location Item to Check/Service	Procedure	Not Fully Mission Capable If:
8	After	Camlock Disconnect Assembly	Check camlock casting for any deformation, cracks, or internal gouges.	Any damage that would interfere with installation or cause leaks.
	After		Check camlock levers for smooth operation and damaged or missing lever arms or rings.	Camlock levers binding, broken, or missing.
	After		Check that gasket is in place and not damaged.	Gasket missing or damaged.

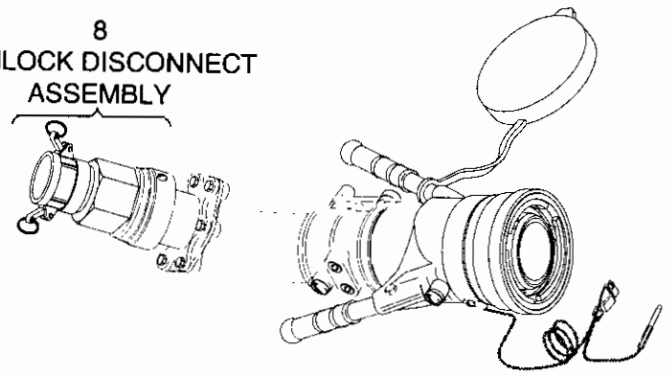

9	After	Strainer and Quick Disconnect Male Adapter Assembly	Check quick disconnect assembly for cracks.	Damaged enough to cause leaking or interfere with operation.
	After		Check for missing or loose flange hardware or lock wire.	Flange hardware or lock wire missing or loose.
	After		Check strainer for obstructions or tear.	Strainer obstructed or torn.

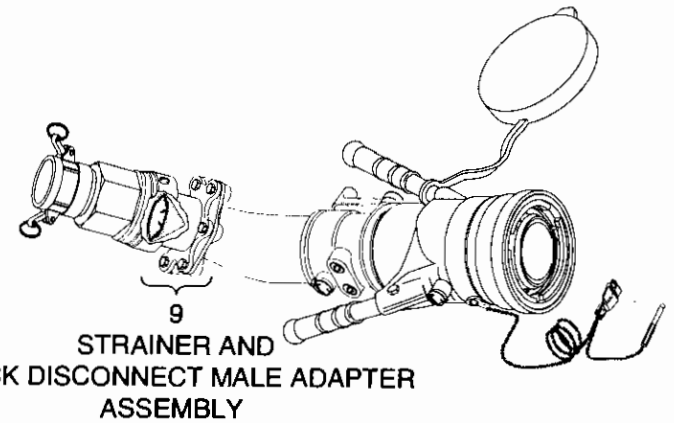

Table 2-1. Operator Preventive Maintenance Checks and Services for D-1 Nozzle - continued

Item No.	Interval	Location Item to Check/Service	Procedure	Not Fully Mission Capable If:
10	After	Grounding Cable Assembly	Check that grounding cable is, bonding plug, and grounding clip are place and in good condition.	Grounding cable, bonding plug, and grounding clip are broken or missing.
11	After	Handles	Check that handles are in place and in good condition.	Handles missing or damaged enough to interfere with operation.
		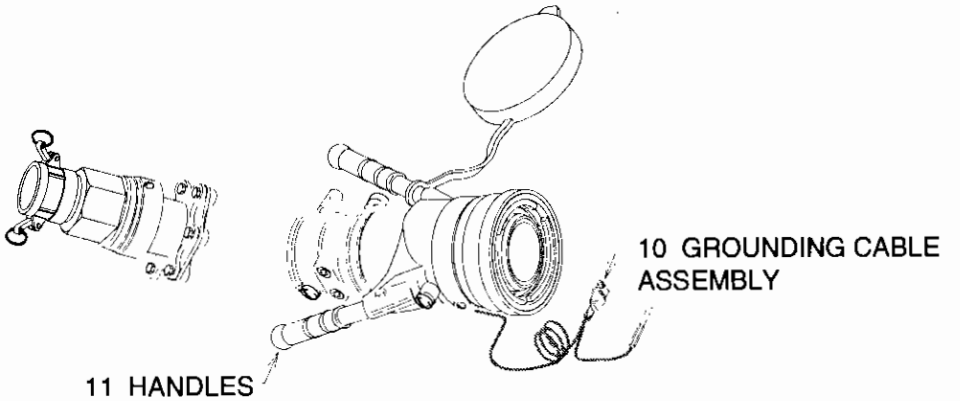		
12	After	Nozzle Body Assembly	When disconnecting the nozzle, if the collar lock pins are not extended and engaged in all three cutouts in the collar, the operator should squeeze the lever and handle grip together while observing the connecting end of the nozzle. This should cause the collar lock pins to spring into the cutouts in the collar. Failure of above could also indicate mating adapter problems.	Pins do not spring back into collar cutouts.
	After		Check that Protective Plastic Dust Cover is in place and in good condition.	
	After		Attempt to open the nozzle with the lever.	Nozzle opens.

Item No.	Interval	Location Item to Check/Service	Procedure	Not Fully Mission Capable If:

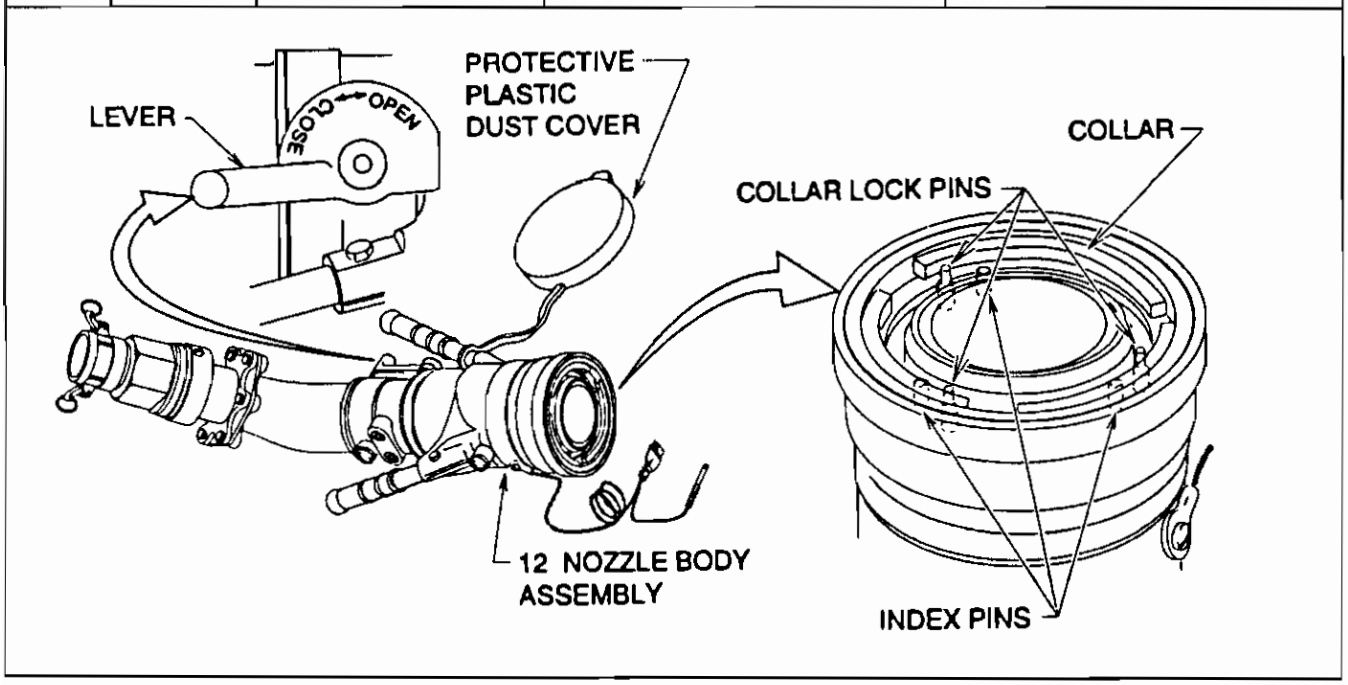

Table 2-1.1 Operator Preventive Maintenance Checks and Services for D-1R Nozzle

Item No.	Interval	Location: Item to Check/Service	Procedure	Not Fully Mission Capable If:
1	Before	Unisex Disconnect Assembly	Check body for any deformation, cracks, or internal gouges.	Any damage would interfere with installation or cause leaks.
	Before		Check that face seal is in place and not damaged.	Face seal is missing or damaged.
	Before		Depress continuity ball on valve seat and observe that ball pops back out. If ball does not pop back out, the unisex coupling must be replaced. Notify unit maintenance	Continuity ball does not pop back out.
	Before		Check strainer for obstructions or tears.	Strainer obstructed or torn.
2	Before	Inlet Elbow	Check elbow and regulator for cracks.	Damaged enough to cause leaking or interfere with operation.
3	Before	Grounding Cable Assembly	Check that grounding cable, bonding plug and grounding clamp are in place and in good condition.	Grounding cable, bonding plug and grounding clamp are broken or missing.
4	Before	Handles	Check that handles are in place and in good condition.	Handles are missing or damaged enough to prevent operation.

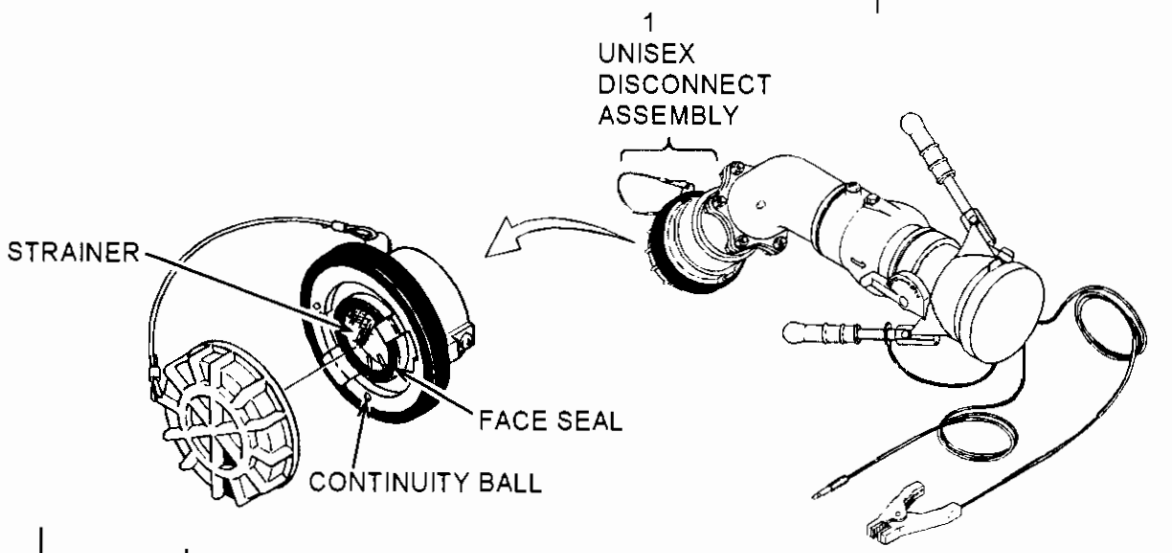

Table 2-1.1 Operator Preventive Maintenance Checks and Services for D-1R Nozzle

Item No.	Interval	Location Item to Check/Service	Procedure	Not Fully Mission Capable If:
		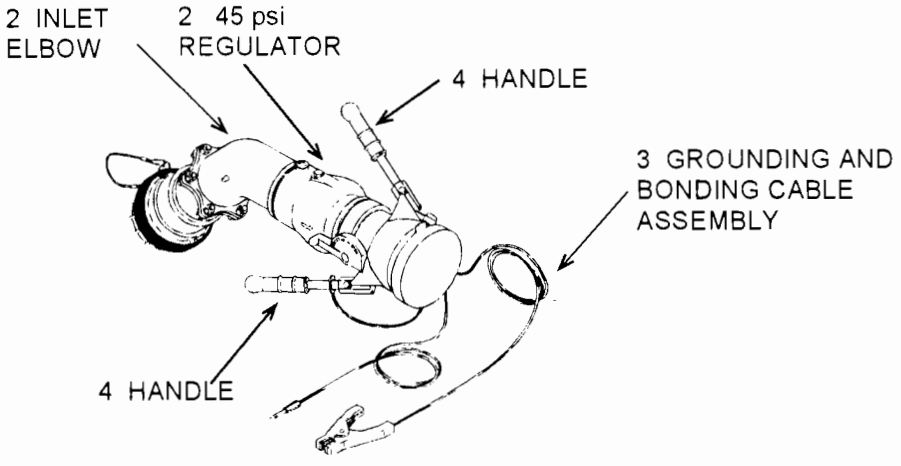		
5	Before	Nozzle Body Assembly	Inspect connection end and verify that index pins and collar lock pins are intact, in place and not excessively worn or damaged.	Index pins or collar lock pins missing, worn or damaged.
	Before		Verify that all three collar lock pins are intact, undamaged and are extended and engage all three cutouts in the collar and physically prevent collar rotation. If the collar lock pins are not extended and engaged in all three cutouts in the collar, the operator should squeeze the lever and handle grip together while observing the connecting end of the nozzle. This should cause the collar lock pins to spring into the cutouts in the collar.	Index pins are not extended to engage all three collar cutouts.
			Attempt to open the nozzle with the lever.	Nozzle opens.

Table 2-1.1 Operator Preventive Maintenance Checks and Services for D-1R Nozzle

Item No.	Interval	Location Item to Check/Service	Procedure	Not Fully Mission Capable If:
6	During	Nozzle Assembly	Check for leaks.	Any leak is found.
7	After	Unisex Disconnect Assembly	Check body for any deformation, cracks, or internal gouges.	Any damage would interfere with installation or cause leaks.
	After		Check that face seal is in place and not damaged.	Face seal is missing or damaged.
	After		Depress continuity ball on valve seat and observe that ball pops back out. If ball does not pop back out, the unisex coupling <u>must</u> be replaced. Notify unit maintenance	Continuity ball does not pop back out.
	After		Check strainer for obstructions or tears.	Strainer obstructed or torn.

Table 2-1.1 Operator Preventive Maintenance Checks and Services for D-1R Nozzle

Item No.	Interval	Location: Item to Check/Service	Procedure	Not Fully Mission Capable If:
8	After	Inlet Elbow	Check elbow and regulator for cracks.	Damaged enough to cause leaking or interfere with operation.
9	After	Grounding Cable Assembly	Check that grounding cable, bonding plug and grounding clamp are in place and in good condition.	Grounding cable, bonding plug and grounding clamp are broken or missing.
10	After	Handles	Check that handles are in place and in good condition.	Handles are missing or damaged enough to prevent operation.

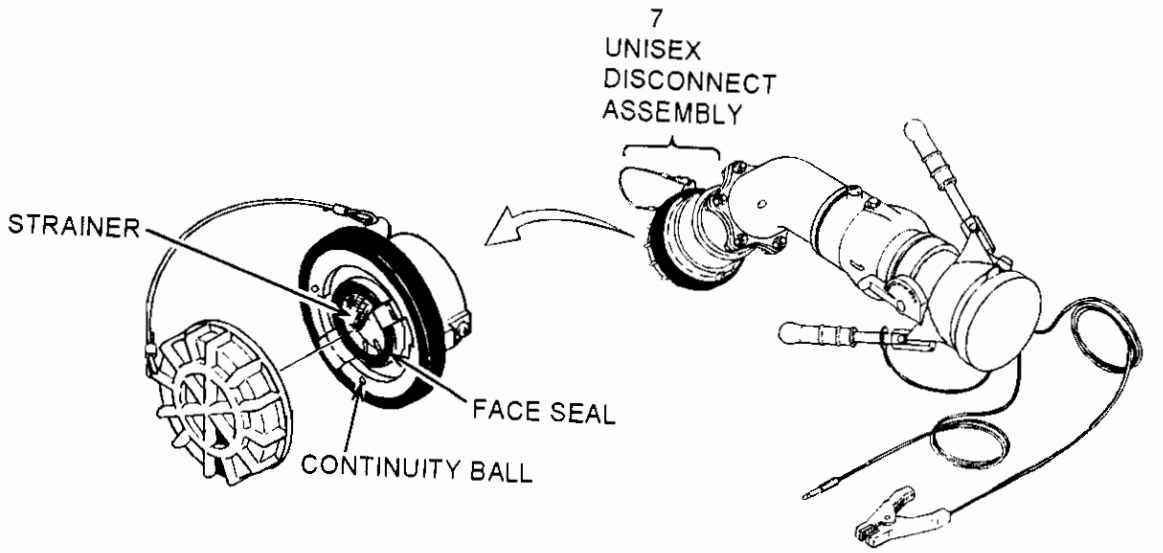

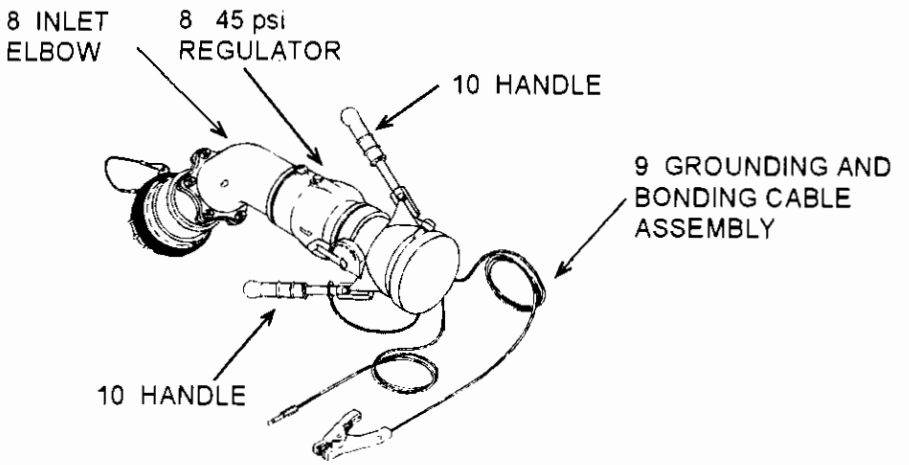

Table 2-1.1 Operator Preventive Maintenance Checks and Services for D-1R Nozzle

Item No.	Interval	Location: Item to Check/Service	Procedure	Not Fully Mission Capable If:
11	After	Nozzle Body Assembly	While disconnecting the nozzle, if the collar pins are not extended and engaged in all three cutouts in the collar, the operator should squeeze the lever and handle grip together while observing the connecting end of the nozzle. This should cause the collar lock pins to spring into the cutouts in the collar. Failure of above could also indicate mating adapter problems.	Pins do not spring back into collar cutouts.
	After		Check that dust cover is in place and in good condition.	
	After		Attempt to open the nozzle with the lever.	Nozzle opens.

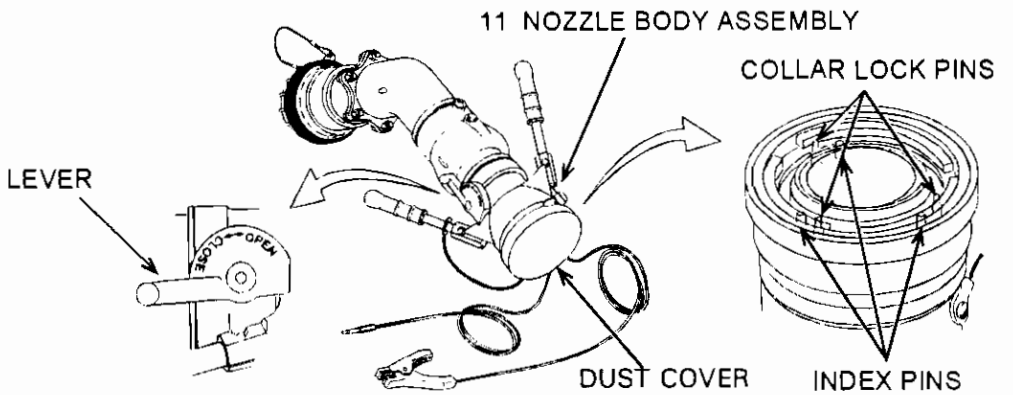

Section III. OPERATION UNDER USUAL CONDITIONS

2-5. ASSEMBLY AND PREPARATION FOR USE.

The D-1 Nozzle is a completely assembled, self-contained unit as received. Notify Unit Maintenance for original unpacking, installation and preparation for use.

2-6. INITIAL ADJUSTMENTS, CHECKS AND SELF-TEST.

Perform the Before preventive maintenance checks and services listed in table 2-1.

2-7. OPERATING PROCEDURES.

WARNING

NO SMOKING

Allow no smoking within 50 ft. of any facility or device storing or handling petroleum fuels. Erect "No Smoking" signs to this effect.

WARNING

VEHICLE ENGINES OFF WHEN FILLING VEHICLE WITH FUEL

Vehicle engines should be shut down when filling the vehicle with fuel to minimize the risk of fire or explosion.

WARNING

LIQUID FUEL ACCUMULATION

The accumulation of liquid fuel or hot lubricating oil is a fire hazard. Apply no smoking rules within 50 ft. of any fuel accumulation. Shut down operation.

WARNING

FUEL SATURATED SOIL

Fuel saturated soil is a fire hazard. Do not allow unnecessary personnel in this area. Do not allow smoking within 50 ft. of the area.

WARNING

EYE INJURY

- Liquid petroleum fuels will cause severe irritation if in contact with eyes. Always wear safety goggles when doing work that might result in getting fuel in the eyes.
- If eyes are subjected to the fuel, flush and wash them promptly and thoroughly with fresh water.

WARNING

CHEMICAL BURNS

Liquid petroleum fuels can cause chemical burns or severe skin irritation. Be safe, wear approved gloves and long sleeves when the possibility of getting fuels on bare skin exists. When fuel comes in contact with the skin, wash with soap and water as soon as possible.

a. Nozzle Connection.

NOTE

Perform all before PMCS. See table 2-1.

(1) Pull protective plastic cap (1) off nozzle end.

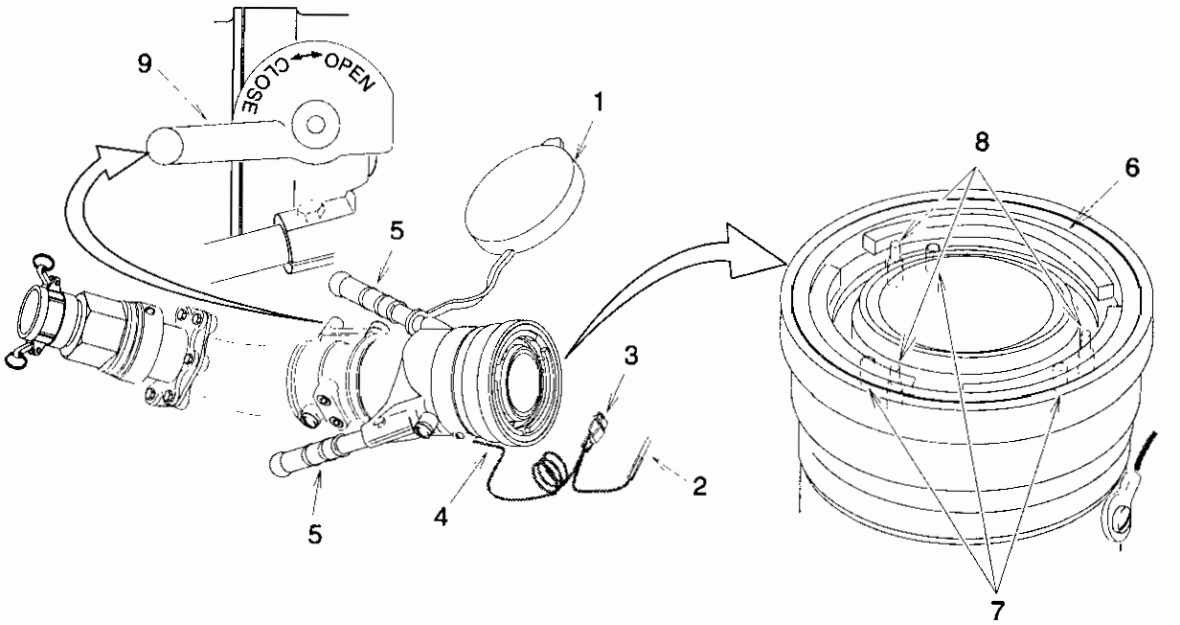

Figure 2-2. Operating Connection Items

2-7. OPERATING PROCEDURES. - continued

WARNING

BONDING

Make sure nozzle is properly bonded to item being fueled to avoid static electricity discharge and possible explosion.

NOTE

Bonding can be accomplished by either a bonding plug or universal clip.

(2) Connect bonding plug (2) or universal clip (3) from bonding cable (4) to frame or other metal surface of item to be fueled.

(3) Grasp the handle grips (5) and align the connection end with the adapter on the item to be fueled.

(4) Press the nozzle collar (6) against the adapter while slightly rotating the nozzle (if necessary) to align the nozzle index pins (7) with the adapter slots.

(5) With the nozzle collar (6) aligned, press the nozzle against the adapter flange until the collar lock pins (8) are depressed sufficiently to permit rotation of the collar in the clockwise direction until the collar is fully engaged against a mechanical stop (approximately 30-35 degrees of collar rotation).

WARNING

- Lever rotation to an intermediate position is unsafe and can result in a flowing disconnect and dangerous fuel spill.
- A flowing disconnect and dangerous fuel spill can result if nozzle collar is removed while under pressure. Severe personal injury or death can result.

CAUTION

If the Lever is not rotated against the full open stop, the adapter poppet spring force may move the nozzle poppet to a partially closed position which will unnecessarily increase the time required to refuel and cause unnecessary wear of both the nozzle and the adapter. (If Lever movement is observed during fuel flow, the Lever was not in the full open, over center, position).

(6) With the collar (6) fully engaged and stopped, rotate the lever (9) to the full OPEN, linkage over center, position until the internal mechanical stop, (approximately 200 degrees) of the lever rotation, is reached.

(7) Before starting fuel flow, grasp handles (5) and be sure collar (6) connection is tight and cannot be rotated counterclockwise.

(8) Start fuel flow.

b. Nozzle Disconnection.

WARNING

DISCONNECT NOZZLE FROM VEHICLE

Make sure nozzle is disconnected from vehicle at loading and unloading stations before vehicle is moved.

(1) Rotate the lever (9) to the CLOSE position until it is against the internal mechanical stop (approximately 200 degrees).

WARNING

If the lever is not against the internal closed stop, with the linkage over center, internal pressure will force the poppet open allowing fuel to spill.

(2) Check that lever (9) is fully closed. Grasp the handles (5) and rotate the collar (6) counter-clockwise until the nozzle is released from the adapter (approximately 30-35 degrees).

(3) Examine the connection end of the nozzle and verify that all three collar lock pins (8) have been released into the cutouts in the collar (6) flange. Squeeze handle (5) and lever (9) together to cause collar lock pins to spring into cutouts.

(4) If pins were not properly released, notify vehicle operator and your supervisor that the adapter on the item being fueled needs inspection and possible replacement.

(5) Disconnect bonding cable (4).

(6) Place protective plastic cap (1) on nozzle end.

2-8. DECALS AND INSTRUCTION PLATES.

Other than manufacturer's part number and serial number marking, the only marking on the D-1 nozzle is on the locking lever and the flow marking.

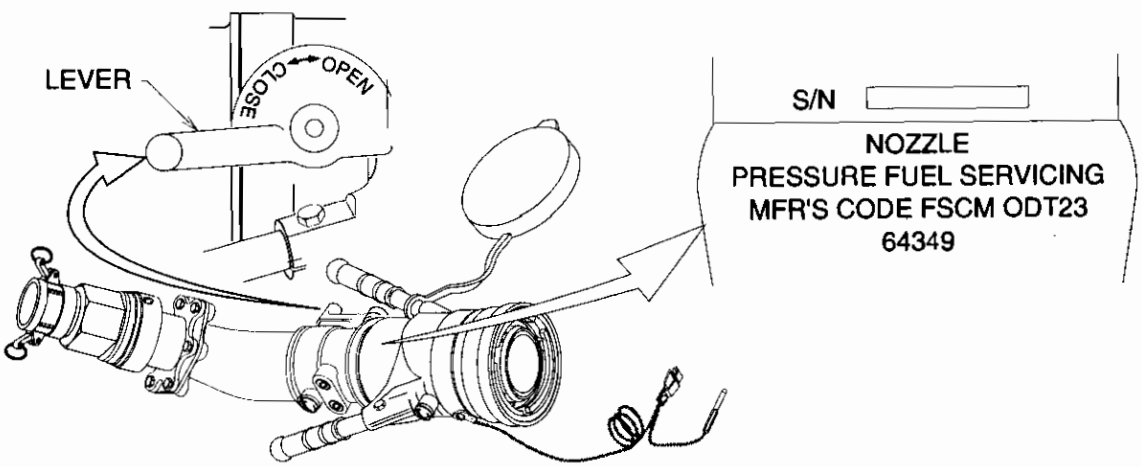

Figure 2-3. Nozzle Marking

Section IV. OPERATION UNDER UNUSUAL CONDITIONS

2-9. EXTREME COLD.

WARNING

Wear gloves, avoid touching metal surfaces with bare hands. Personal injury can result from freezing.

a. Check collar lock pins more carefully to be sure they operate properly.

b. Rubber and plastic parts such as hoses and nozzle end piece become stiff and are more easily damaged when they are cold. Take additional care when handling these items.

2-10. DUSTY OR SANDY ENVIRONMENT AND SALT AIR OR SEA SPRAY.

Other than more frequent cleaning, especially of equipment that is not being used, no special precautions are necessary. Be sure protective plastic cap is kept in place when nozzle is not being used and cover nozzle when possible.

2-11. NUCLEAR, BIOLOGICAL, AND CHEMICAL (NBC) DECONTAMINATION.

NOTE

Detailed decon procedures can be found in: FM 3-3, FM 3-4, and FM 3-5.

a. General: The following emergency procedures can be performed until field NBC decon facilities are available.

b. Emergency Procedures: If NBC attack is known or suspected. Mask at once and continue mission. If outside, follow decon procedures below to avoid taking contamination into controlled area. Do not unmask until told to do so.

(1) Nuclear decontamination: Brush fallout from skin, clothing, and equipment with available brushes, rags, and tree branches. Wash skin and have radiation check made as soon as tactical situation permits.

(2) Biological decontamination: Remain masked and continue mission until told to unmask.

(3) Chemical detection and decontamination:

WARNING

Do not use decontamination spray on personnel. It could cause personal injury.

(a) Use M8 paper from the M256 Chemical Agent Detector Kit or M9 paper to determine if liquid agent is present on the equipment.

(b) If exposure to liquid agent is known or suspected, clean exposed skin, clothing, personal gear, and equipment, in that order using M258A1 kit. Use the buddy system. Wash exposed skin and thoroughly decontaminate as soon as tactical situation permits.

(c) If the M8 or M9 paper indicates that liquid chemical agent is present on the equipment, use the NBC-M11 decon apparatus for decon of equipment.

CHAPTER 3

OPERATOR MAINTENANCE INSTRUCTIONS

Section I. LUBRICATION INSTRUCTIONS

Lubrication not required.

Section II. OPERATOR TROUBLESHOOTING PROCEDURES

There is no operator troubleshooting required on the D-1 Nozzle.

Section III. OPERATOR'S MAINTENANCE PROCEDURES

3-1. GENERAL.

Operator's maintenance procedures are limited to the cleaning and checks defined in PMCS Table 2-1.

CHAPTER 4

UNIT MAINTENANCE INSTRUCTIONS

Section I. REPAIR PARTS, TOOLS, SPECIAL TOOLS, TEST MEASUREMENT, AND DIAGNOSTIC EQUIPMENT (TMDE), AND SUPPORT EQUIPMENT

4-1. COMMON TOOLS AND EQUIPMENT.

a. For authorized common tools and equipment refer to the Modified Table of Organization and Equipment (MTOE) CTA 50-970 as applicable to your unit.

b. No special tools are required for unit maintenance. All tools needed are available in Shop Equipment Automotive Maintenance SC4910-95-CL-A74.

4-2. REPAIR PARTS.

a. Mandatory replacement parts are listed in Appendix J of this manual.

b. Repair parts are listed and illustrated in Appendix C of this manual.

Section II. SERVICE UPON RECEIPT

4-3. UNPACKING AND INSPECTION.

a. Remove the nozzle from the packing container.

b. Inspect the nozzle for damage incurred during shipment. If nozzle has been damaged, report the damage on SF364, Report of Discrepancy.

c. Check that the nozzle is complete.

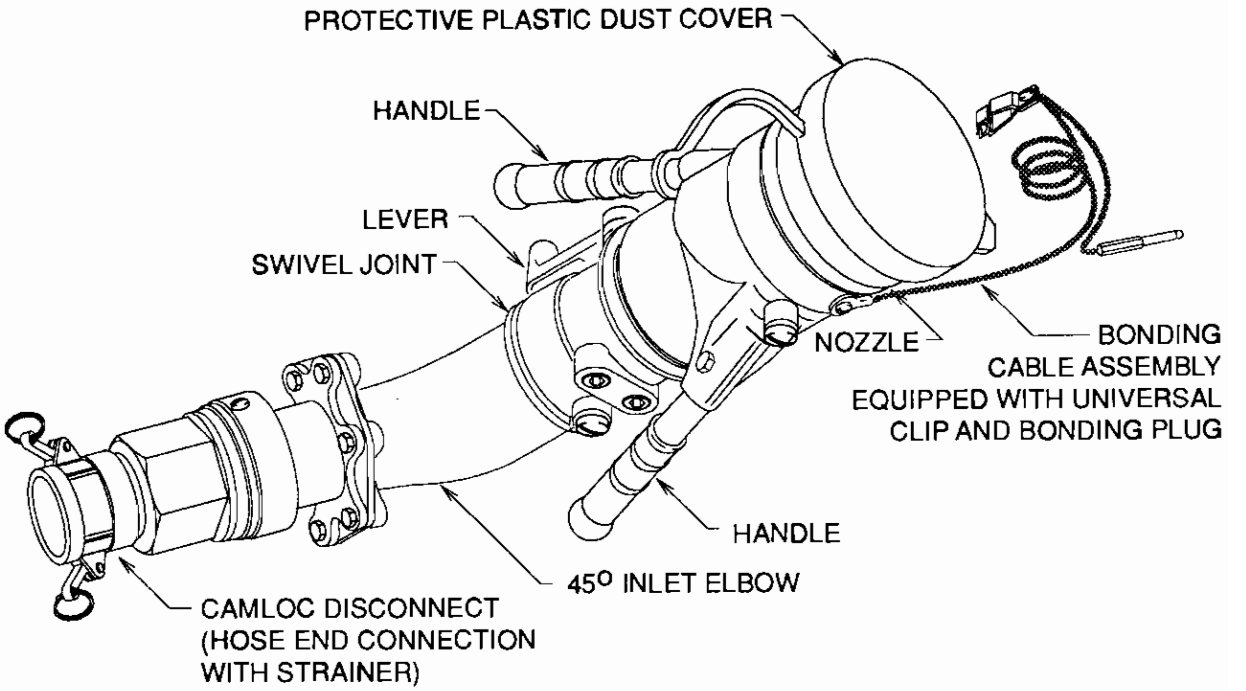

Figure 4-1. Nozzle Components

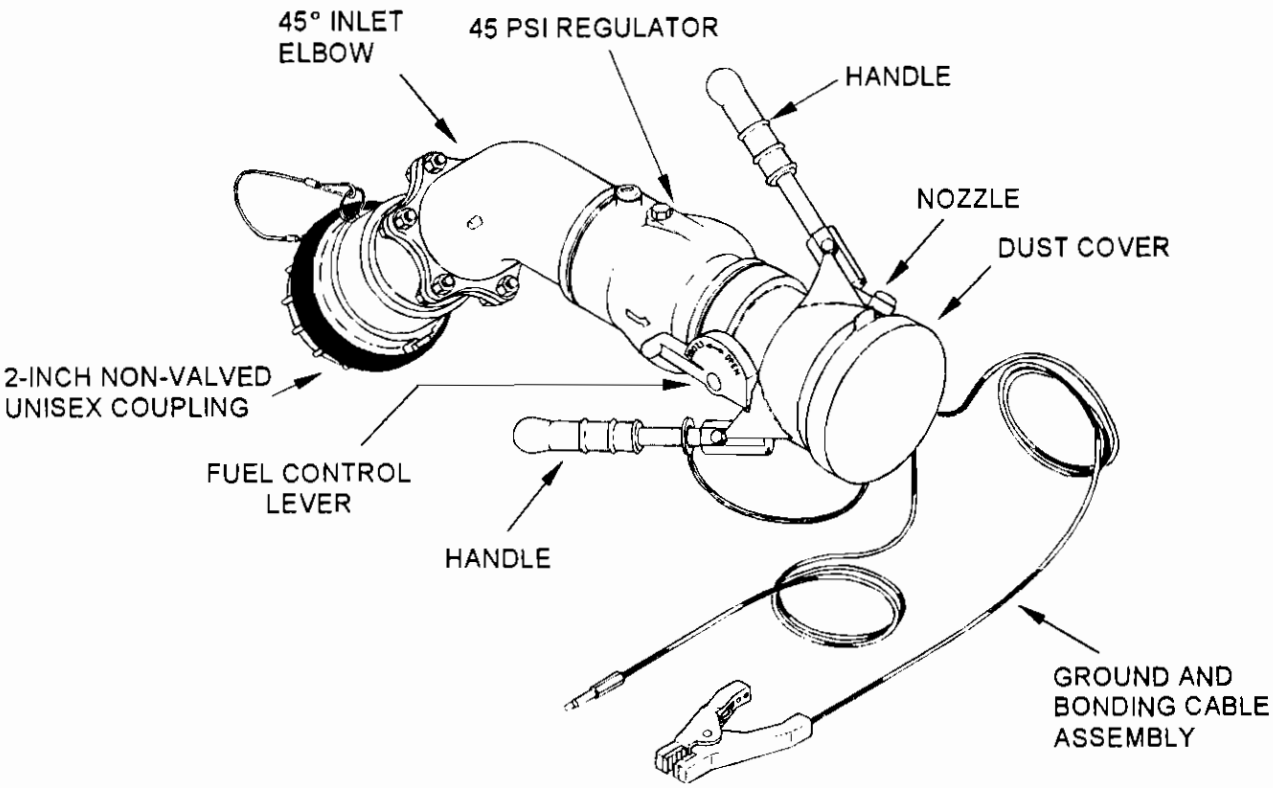

Figure 4-1.1. Nozzle Components (D1-R)

4-4. INSTALLATION.

See system manual for installation instructions.

Section III. UNIT PREVENTIVE MAINTENANCE CHECKS AND SERVICES (PMCS)

Unit preventive maintenance checks and services are not required.

Section IV. UNIT TROUBLESHOOTING PROCEDURES

Unit troubleshooting procedures not required.

Section V. UNIT MAINTENANCE PROCEDURES

4-5. GENERAL.

The procedures in this section have been arranged in the order in which the items appear in the unit (O) maintenance level column on the Maintenance Allocation Chart (MAC) which is provided in Appendix B. Step-by-step procedures have been provided for all actions authorized to be performed by unit maintenance in the order in which they appear on the MAC.

4-6. CAMLOCK DISCONNECT ASSEMBLY REPLACEMENT AND REPAIR.

This task covers: a. Removal b. Disassembly c. Repair d. Assembly e. Installation

INITIAL SETUP

Tools

Tool Kit, General Mechanics (Appendix B, Section III, Item 1)

Vise (Appendix B, Section III, item 3)

Pipe Wrench (Appendix B, Section III, item 3)

Equipment Condition

Nozzle coupling disconnected from fuel supply hose.

General Safety Requirements

WARNING

Dry cleaning solvent is potentially dangerous to personnel and property.

Materials/Parts

Dry Cleaning Solvent (Appendix F, Item 3)

Rags (Appendix F, Item 4)

Petrolatum (Appendix F, Item 5)

Preformed packing (Appendix J, Item 1)

Gasket (Appendix J, Item 2)

Lock Wire (Appendix F, Section II, item 8) (Appendix J, item 12)

Lock Nuts (Appendix J, item 13)

Antisieze Tape (Appendix F, Section II, item 6)

a. Removal

Remove six lock nuts (1), flat washers (2), screws (3), flat washers (4), camlock disconnect assembly (5), and gasket (6). Discard lock nuts and gasket.

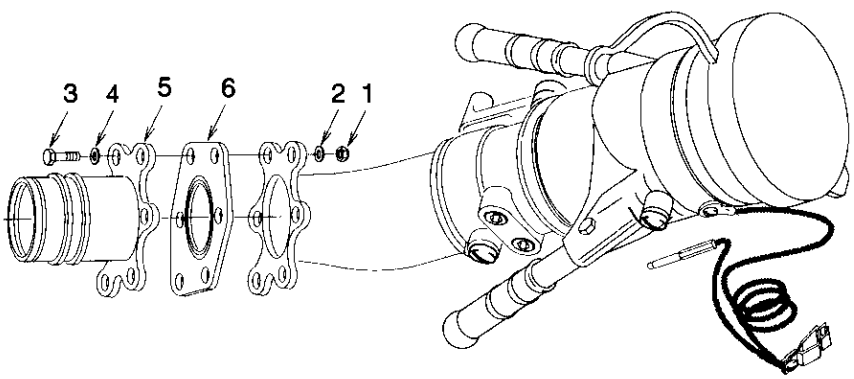

Figure 4-2. Camlock Disconnect Assembly Removal

b. Disassembly Disassemble only to point necessary to replace broken, missing, or damaged parts.

NOTE

The gasket in the camlock coupling end can be removed and replaced without removal or disassembly of other parts.

(1) Unscrew camlock coupling end (1) and gasket (2) as an assembly.

(2) Remove gasket (2) from camlock coupling end (1).

(3) Remove lock ring (3).

(4) Cut lock wire (4) and remove two screws (5).

NOTE

When retainer is removed bearings will fall out. Place hose end over a container prior to retainer removal.

(5) Slip retainer (6) off of end and remove sixteen bearings (7) from housing (8).

(6) Slip housing (8) off of adapter (9).

(7) Remove and discard preformed packing (10).

(8) Remove retaining ring (11) and strainer (12).

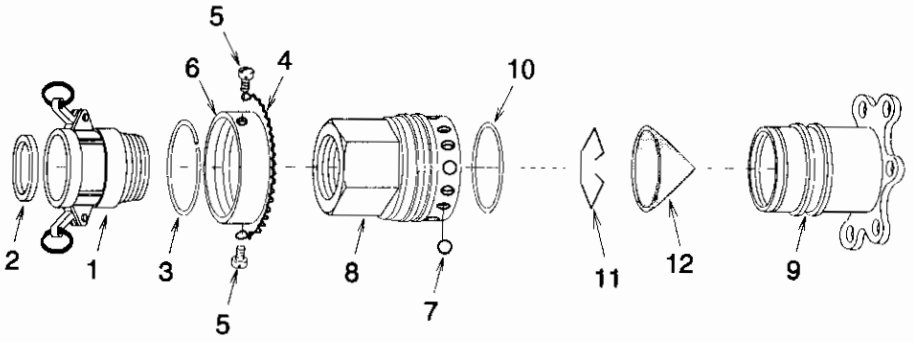

Figure 4-3. Camlock Disconnect Assembly Disassembly

c. Repair Repair consists of replacement of defective components and mandatory replacement parts.

(1) Check all parts for general condition. Replace parts that are cracked, broken or have obvious damage that would be a hazard or interfere with operation.

4-6. CAMLOCK DISCONNECT ASSEMBLY REPLACEMENT AND REPAIR. - continued

(2) Check parts for excessive buildup of dirt and debris. Clean if needed.

WARNING

Dry cleaning solvent used to clean parts is potentially dangerous to personnel and property. Do not use near open flame or excessive heat. Use in well ventilated area.

NOTE

Prior to reassembly, clean all metal parts. They must be free from oil, grease and corrosion resistant compounds on all interior and exterior surfaces.

(3) Wash all metal parts with dry cleaning solvent.

(4) Dry thoroughly with clean, lint free cloth.

d. Assembly See figure 4-3.

NOTE

A light coat of petrolatum can be applied to all gaskets and preformed packings to ease assembly.

(1) Install strainer (12) and retaining ring (11).

(2) Slip a new preformed packing (10) into place on nozzle adapter (9) end.

(3) Slip housing (8) onto nozzle adapter (9) end and aline holes over ball race in nozzle adapter end.

NOTE

Retainer must be installed with bevel toward adapter flange.

(4) Slip retainer (6) onto housing (8).

(5) Place sixteen balls (7) in holes using retainer (6) to help hold balls in place. Seat retainer into place over balls.

(6) Secure retainer (6) with two screws (5).

(7) Secure screws (5) with twisted lock wire (4). Be sure that ends of lock wire are turned under and that no sharp edges are exposed.

(8) Slip retaining ring (3) into groove nearest retainer (6) in housing (8).

(9) If old gasket (2) was damaged, replace with new gasket.

(10) Apply antisieze tape to camlock coupling (1) threads and install into housing (8).

e. Installation See figure 4-2.

Install new gasket (6), camlock disconnect assembly (5), six flat washers (4), screws (3), flat washers (2), and new lock nuts (1).

4-6A. REPAIR TWO-INCH NON-VALVED SCREENED UNISEX COUPLING.

This task consists of: a. Disassembly b. Assembly

INITIAL SET-UP

Tools:

Tool Kit, General Mechanics (Appendix B, Section III, Item I)

Materials/Parts Required:

Preformed packing (Appendix J, Item 19)
Petrolatum (Appendix F, Item 5)
Preformed packing (Appendix J, Item 20)
Rag (Appendix F, Item 4)

General Safety Requirements:

WARNING

- Fuels are toxic and flammable. Do not get on person or clothing. Do not use near open flame. Area should be well ventilated.
- Using dry cleaning solvents incorrectly can cause injury or even death.
- Fuel is flammable. Do not smoke.

Equipment Condition:
Component removed from system in accordance with TM 10-4930-250-13&P, para. 2-8.

NOTE

Inspect the coupling components as they are disassembled. Repair is limited to replacement of unserviceable components discovered during disassembly. Removed preformed packings shall be replaced.

a. Disassembly and Inspection. (Refer to figure 4-3.1.)

1. Remove ball retaining screw (1) and preformed packing (2).
2. Hold unit over a suitable container with screw hole oriented toward container. Rotate 2-inch non-valved unisex coupling (3) back and forth until all 41 balls (4) have collected in the container.
3. Remove 2-inch non-valved unisex coupling (3) and preformed packing (5) from D-1 nozzle inlet adapter (6).
4. Remove spring (7) from 2-inch non-valved unisex coupling (3).
5. Remove dust cap (8) from 2-inch non-valved unisex coupling (3).
6. Remove screen assembly (9) from 2-inch non-valved unisex coupling (3).
7. If dust cap (8) or cable (10) is to be replaced, cut cable (10) to remove.
8. Ring (11) attaching dust cap (8) to 2-inch non-valved unisex coupling (3) may be removed from the cable (10) by rotating it through the split portion of the ring (11).
9. Remove the bumper (12) only if it is to be replaced or the lugs (13 and/or 14) must be replaced.

10. Remove screws (15) to remove lugs (13 and/or 14).

11. Remove locking pin (16) and spring (17).

NOTE

Do not remove continuity ball from coupling body. If continuity ball requires replacement, replace the entire 2-inch non-valved unisex coupling.

b. Repair Repair consists of replacement of defective components.

c. Assembly

NOTE

During assembly, apply a light coating of petrolatum to preformed packings before installation.

1. Install locking pin (16) and spring (17).

2. Install lugs (13 and/or 14) and screws (15).

3. Install bumper (12) with the thin lip seal end facing away from the 2-inch non-valved unisex coupling (3).

4. Attach cable (10) to dust cap by looping about 6 inches of cable (10) through the hole in dust cap (8) forming a loop back on the cable (10). Install and crimp a sleeve (18) over the two sections of cable (10).

5. If cable (10) was cut, attach cable (10) to split ring (11) by looping about 6 inches of cable (10) through the split ring (11) forming a loop back on the cable (10). Install and crimp a sleeve (18) over the two sections of cable (10). If cable (10) was not cut, attach to split ring (11) by rotating split ring (11) through the cable (10) loop.

6. Install screen assembly (9) in 2-inch non-valved unisex coupling (3).

7. Install spring (7) in 2-inch non-valved unisex coupling (3).

8. Install dust cover (8) on 2-inch non-valved unisex coupling (3).

9. Install preformed packing (5) and 2-inch non-valved unisex coupling (3) on D-I nozzle inlet adapter (6).

NOTE

When inserting balls in unisex coupling ball race, use caution to avoid dropping loose balls. Recommend working over a container.

10. Hold unit over a suitable container with screw hole facing up and adjust position until ball race (rounded groove) is centered under ball retaining screw (1) hole. Install balls (4) one at a time, rotating 2-inch non-valved unisex coupling back and forth until all 41 balls (4) have been inserted.

11. Install preformed packing (2) and ball retaining screw (1) in 2-inch non-valved unisex coupling (3). Tighten ball retaining screw (1).

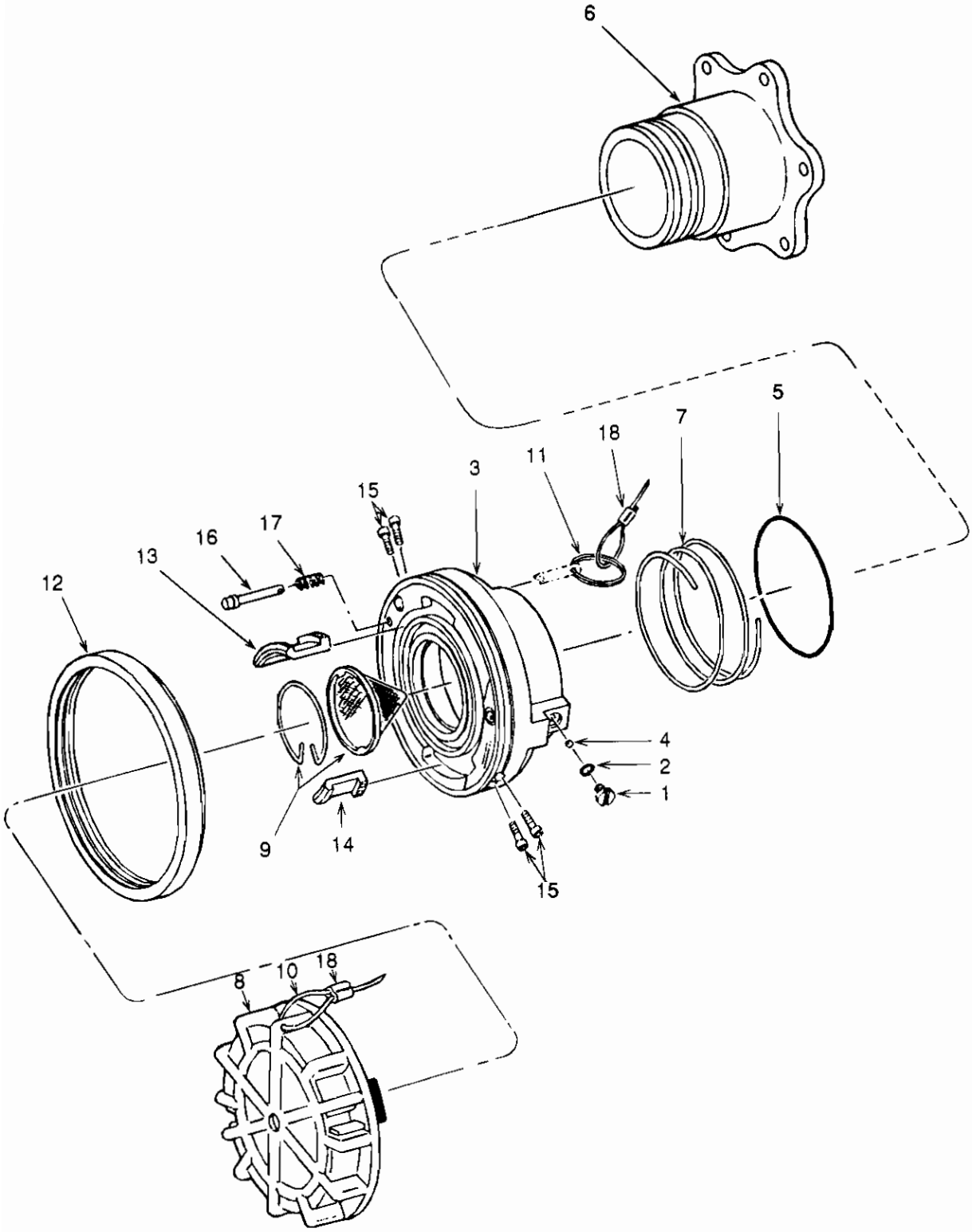

Figure 4-3.1. Repair of Two-Inch Non-Valved Screened Unisex Coupling

4-7. INLET ELBOW REPLACEMENT.

This task covers: a. Removal b. Installation

INITIAL SETUP

Tools

Tool Kit, General Mechanics (Appendix B, Section III, Item 1)

Materials/Parts

Adhesive (Appendix F, Item 1)

Detergent (Appendix F, Item 2)

Dry Cleaning Solvent (Appendix F, Item 3)

Rags (Appendix F, Item 4)

Petrolatum (Appendix F, Item 5)

Equipment Condition

Camlock disconnect assembly removed. (See para 4-6.)

Materials/Parts

O-Ring (Appendix J, Item 3)

O-Ring (Appendix J, Item 4)

Seal (Appendix J, Item 5)

O-Ring (Appendix J, Item 6)

a. Removal

(1) Remove screw (1).

(2) Remove O-ring (2) and discard.

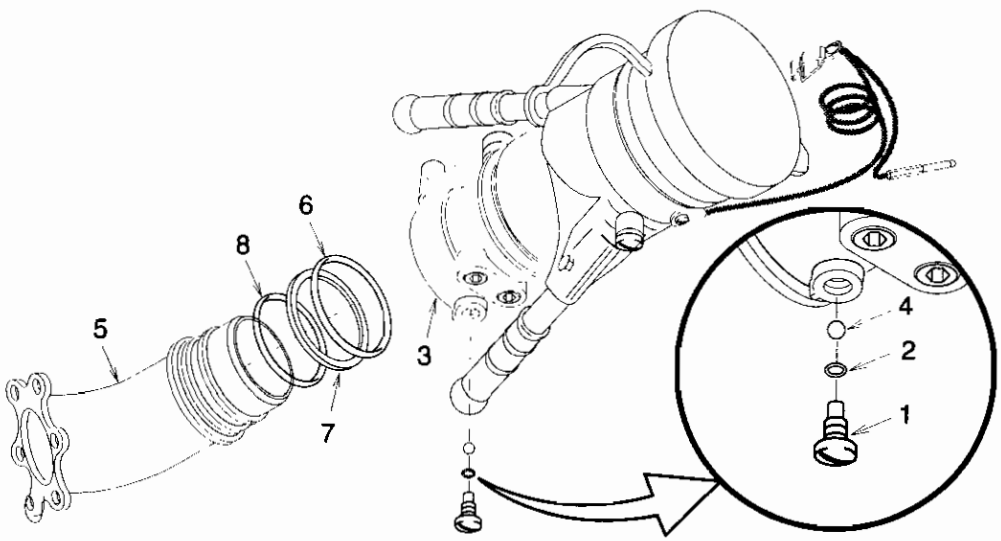

Figure 4-4. Inlet Elbow

4-7. INLET ELBOW REPLACEMENT. - continued

NOTE

To prevent loss of balls and aid assembly, place a suitable container under body opening. Catch all balls as they fall from opening.

(3) Hold the fuel nozzle body (3) with bolt hole vertical (pointed down) and allow all balls (4) to be removed through the bolt hole. Rotation between the body and the inlet elbow (5) will be required to allow the balls to fall out of the hole.

(4) Slip the inlet elbow (5) out of the fuel nozzle body (3).

(5) Remove O-ring (6), seal (7), and O-ring (8) from elbow (5) and discard.

b. Installation See figure 4-4.

(1) Lubricate and install new O-rings (6) and (8), in the groove in elbow (5) and fuel nozzle body (3), lubricate and install new seal (7) onto inlet elbow (5) on top of O-ring.

(2) Insert elbow (5) into fuel nozzle body (3) so that bearing race alines with screw hole in body.

NOTE

Do not use any form of grease on screw, O-ring or balls.

(3) Install all thirty-nine ball bearings (4) through screw hole in body (3).

(4) Place new O-ring (2) on the end of screw (1) and install screw.

(5) Install camlock disconnect assembly per paragraph 4-6.

4-8. NOZZLE BODY ASSEMBLY REPAIR.

This task covers: Repair

INITIAL SETUP

Tools

Tool Kit, General Mechanics (Appendix B, Section III, Item 1)

Equipment Condition

Not dispensing fuel.

Materials/Parts

Self Locking Nut (Appendix J, item 14)

Repair

(1) Bonding cable.

Remove screw (1) and install new bonding cable assembly (2) with screw.

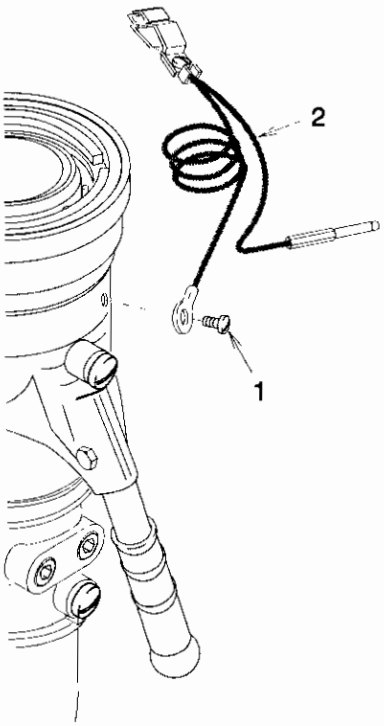

Figure 4-5. Bonding Cable

4-8. NOZZLE BODY ASSEMBLY REPAIR. - continued

(2) Handles and cover.

(a) Remove self locking nut (1), flat washer (2), screw (3), flat washer (4), handle (5), and cover (6). Discard lock nut.

(b) Slip cover (6) onto handle (5).

(c) Install handle (5), flat washer (4), screw (3), flat washer (2), and new self locking nut (1).

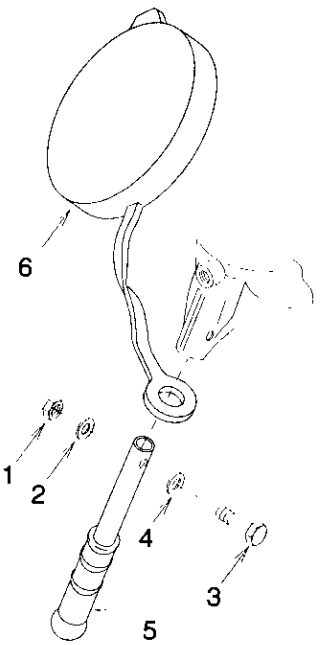

Figure 4-6. Handles and Cover

Section VI. PREPARATION FOR STORAGE OR SHIPMENT

4-9. PREPARATION FOR STORAGE.

NOTE

Before placing the equipment in administrative storage, current preventive maintenance checks and services should be completed, shortcomings and deficiencies should be corrected, and all modification work orders (MWO) should be applied.

a. Storage Site Selection. Inside storage is preferred for items selected for administrative storage. If inside storage is not available, trucks, vans, conex containers, and other containers may be used.

b. Administrative Storage. Placement of equipment in administrative storage should be for short periods of time when a shortage of maintenance effort exists. Items should be in mission readiness within 24 hours or within the time factors as determined by the directing authority. During the storage period, appropriate maintenance records will be kept.

c. Intermediate Storage - 46 to 180 days. No special handling is required other than protection from damage and the elements.

d. Long Term or Flyable Storage. There is no time limit for this type of storage. Package in accordance with paragraph 4-12.

4-10. PREPARATION FOR SHIPMENT.

NOTE

For disposal of contaminated fuel refer to FM 10-69.

a. Use purging solution, Appendix F, Section II, item 7, to purge residual fuel from nozzle.

b. Install cover on nozzle outlet.

c. Place a protective cover over camlock inlet.

d. Equipment will be packaged in accordance with Army Master Data File (AMDF) Packaging. Marking shall be in accordance with MIL-STD-129.

CHAPTER 5
DIRECT SUPPORT MAINTENANCE INSTRUCTIONS

Section I. REPAIR PARTS, TOOLS, SPECIAL TOOLS, TEST MEASUREMENT, AND DIAGNOSTIC EQUIPMENT (TMDE), AND SUPPORT EQUIPMENT

5-1. COMMON TOOLS AND EQUIPMENT.

For authorized common tools and equipment refer to the Modified Table of Organization and Equipment (MTOE) CTA 50-970 as applicable to your unit.

5-2. SPECIAL TOOLS.

The following special tool is required for direct support maintenance. Use of this tool is described in Section III of this chapter.

Pressure Fuel Servicing Adapter (96906) MS24484.

5-3. REPAIR PARTS.

a. Mandatory replacement parts are listed in Appendix J of this manual.

b. Repair parts are listed and illustrated in Appendix C of this manual.

Section II. DIRECT SUPPORT TROUBLESHOOTING PROCEDURES

Direct support troubleshooting procedures are not required.

Section III. DIRECT SUPPORT MAINTENANCE PROCEDURES

The procedures in this section have been arranged in the order in which the items appear in the direct support (F) maintenance level column on the Maintenance Allocation Chart (MAC) which is provided in Appendix B. Step-by-step procedures have been provided for all actions authorized to be performed by direct support maintenance in the order in which they appear on the MAC.

5-4. BODY ASSEMBLY REPAIR.

This task covers: a. Disassembly b. Repair c. Assembly

INITIAL SETUP

Tools

Tool Kit, General Mechanics (Appendix B, Section III, item 1)

Adapter MS24484 (Appendix B, Section III, item 2)

Knife, Craftsman (Appendix B, Section III, item 4)

Hammer, Dead Blow (Appendix B, Section III, item 4)

Materials/Parts

Dry cleaning solvent (Appendix F, item 3)

Petrolatum (Appendix F, item 5)

Back-up ring (Appendix J, item 7)

O-Ring (Appendix J, item 8)

O-Ring (Appendix J, item 9)

Cotter Pin (Appendix J, item 10)

Cotter Pin (Appendix J, item 11)

Equipment Condition

Nozzle coupling disconnected from fuel supply hose.

Inlet elbow removed. (See para 4-7)

Bonding cable removed. (See para 4-8)

General Safety Requirements

WARNING

- Exert caution when using cutting tool to prevent personal injury and damage to part.
- Dry cleaning solvent used to clean parts is potentially dangerous to personnel and property. Do not use near open flame or excessive heat. Use in well ventilated area.
- To prevent injury to personnel, wear protective gloves when installing bumper. Bumper must be softened in hot water and installed while still hot. Failure to wear protective gloves could result in serious burns.

NOTE

Disassemble equipment only to the extent necessary for repair.

a. Disassembly

WARNING

Exert caution when using cutting tool to prevent personal injury and damage to part.

(1) Remove Collar Bumper (1) by cutting through the bumper.

NOTE

To prevent loss of balls and aid assembly, place a suitable container under body opening. Catch all balls as they fall from opening.

(2) Remove Screw (2). Hold the nozzle collar (3) with bolt hole vertical (pointed down) and allow all balls (4) to be removed through the bolt hole. Manipulate nozzle collar to allow 49 balls to fall out of hole.

(3) Engage nozzle collar (3) to adapter (5).

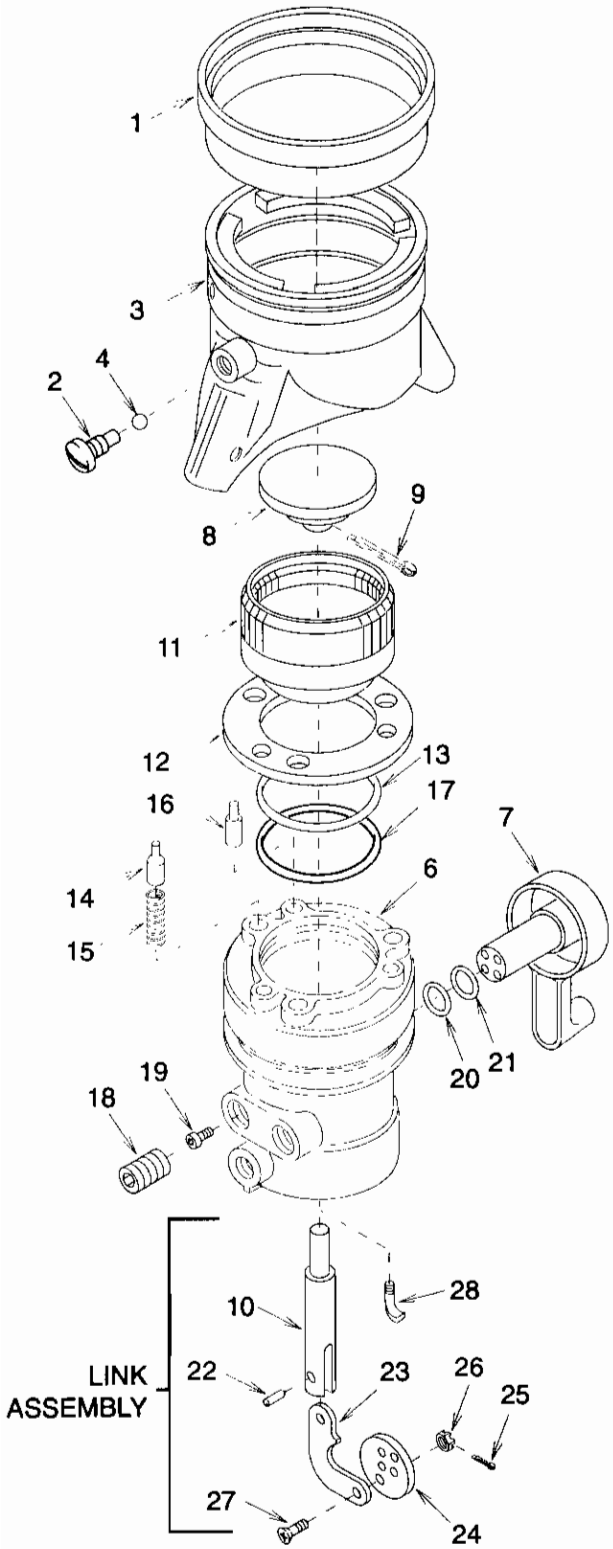

Figure 5-1. Nozzle Body

5-4. BODY ASSEMBLY REPAIR. - continued

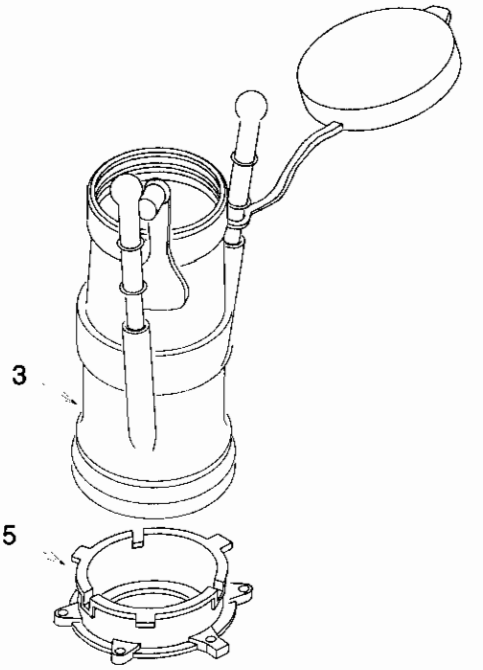

Figure 5-2. Adapter

(4) Remove fuel nozzle body assembly (6) from nozzle collar (3) by aligning the groove in the collar with dent on body and pulling body from collar.

(5) Remove adapter (5).

(6) Turn Lever (7) to open poppet (8).

(7) Remove cotter pin (9) and unscrew the poppet (8) from the shaft (10).

(8) Remove the nozzle seal assembly (11), (12), and (13) by lifting off body (6).

(9) Remove bearing retaining plate (12) from the seal (11) by spreading the ends of the retaining ring (13) and removing it from the groove in the seal. Slide plate off seal.

(10) Remove three lock pins (14), three lock pin springs (15), three index pins (16) and O-ring (17).

(11) Remove two plugs (18).

NOTE

Observe the orientation of the cam plate with respect to lever so that it can be duplicated during reassembly. Mis-orientation will result in not being able to close nozzle properly.

(12) Remove screws (19) through plug (18) opening.

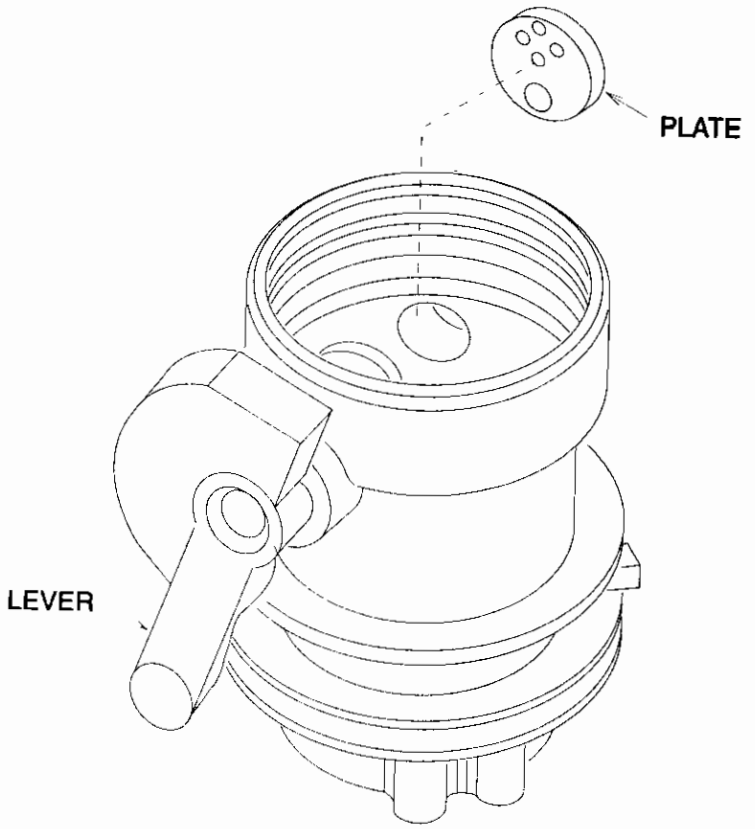

Figure 5-3. Plate and Lever Alinement

(13) Remove lever (7) from body (6).

(14) Remove preformed packing (20) and packing retainer (21) from lever (7).

NOTE

Crank pin will be loose and can fall out when removing link assembly.

(15) Remove assembled shaft (10), pin (22), link (23) and cam plate (24) from body (6).

(16) Remove cotter pin (25), nut (26), screw (27), and crank pin (22). Discard cotter pin.

(17) Use needle nose pliers to remove continuity clip (28) if it is to be replaced.

5-4. BODY ASSEMBLY REPAIR. - continued

b. Repair Repair is by replacement of defective or damaged components.

WARNING

Dry cleaning solvent used to clean parts is potentially dangerous to personnel and property. Do not use near open flame or excessive heat. Use in well ventilated area.

(1) Wash all metal parts with dry cleaning solvent.

(2) Dry thoroughly with clean, lint free cloth.

(3) Be sure that continuity clip hole is clean and free of all debris.

(4) Inspect all metal parts for dings, gouges, abrasion, etc.

c. Assembly (See figure 5-1.)

NOTE

A light coat of petrolatum can be applied to all gaskets, springs, and O-rings to ease assembly.

(1) Insert crank pin (27) through link (23) and plate (24). Install nut (26) and tighten to align slots in nut with hole in crank pin and install new cotter pin (25).

(2) Slip link (23) into slot in shaft (10) and secure with dowel pin (22).

(3) Insert the above subassembly through the inlet end of the body (6). Be sure that the shaft (10) is inserted into the body's axial guide bore far enough that the bore contains the dowel pin (22).

NOTE

Orientation of plate must be same as observed during disassembly.

(4) Install new backup ring (21) and new seal (20) on lever (7).

(5) Install lever (7).

CAUTION

Correct Alinement of plate and lever is critical to proper operation of the nozzle. Aline plate and lever before installing socket head screws.

(6) Aline plate (24) to lever (7) per figure 5-3 and secure with four socket head screws (19).

(7) Install O-ring (17) into body (6).

CAUTION

Lock pins must be installed with flat surfaces facing out from body. Installing lock pins in the wrong direction will cause body to lock onto collar, preventing nozzle operation.

(8) Install three each springs (15), index pins (16), and lock pins (14).

(9) Assemble plate (12) to seal (11) and secure with retaining ring (13). Install onto body (6).

(10) Aline fuel nozzle body (6) lug with nozzle collar (3) groove and insert body into nozzle collar. Turn body to the right until body and collar engage so that bearing race alines with screw hole in nozzle collar.

NOTE

Do not use any form of grease on screw or balls.

(11) Install all 49 ball bearings (4) through screw hole in nozzle collar (5) and install screw (2).

(12) Using adapter (5), engage the collar (3) and rotate lever (7) to the open position to extend shaft (10) to its fullest open position.

(13) Screw poppet (8) onto the shaft such that the hole in the shaft is approximately centered in the slotted area of the poppet.

(14) Close the poppet (8) and disengage the collar (3) from the adapter (5) flange and set the nozzle on its inlet end. If the poppet is difficult to close, reopen the unit and loosen the poppet one half turn and repeat until the nozzle closes. Place a straight edge across the center of the elastomer lip of the seal (11). Use feeler gages to measure the average dimension between the bottom of the straight edge and the poppet face. This dimension should be 0.070 to 0.110 inch (1.8 to 2.8 mm). If it is not, calculate the required poppet dimension as follows.

NOTE

One quarter (1/4) turn of the poppet axially displaces the poppet face about 0.020 inch (0.51 mm).

(a) If gap is too large, unscrew (loosen) the poppet (8) one quarter (1/4) turn for each 0.020 inch (0.51 mm) of required adjustment.

(b) If gap is too small, tighten the poppet (8) one quarter (1/4) turn for each 0.020 inch (0.51 mm) of required adjustment.

(15) Once the proper poppet (8) adjustment is made, rotate the poppet toward the tightening direction until the next slot in the poppet is in line with the hole in the shaft (10). Insert the cotter pin (9) and bend over the ends to retain in place.

5-4. BODY ASSEMBLY REPAIR. - continued

WARNING

To prevent injury to personnel, wear protective gloves when installing bumper. Bumper must be softened in hot water and installed while still hot. Failure to wear protective gloves could result in serious burns.

(16) Soak new bumper (1) in hot water (160 - 180° F (71 - 82° C)) until soft. While still soft and pliable, press bumper onto collar (3).

(17) Apply teflon tape on threads of plugs (18) and install plugs into body (6).

(18) Install continuity clip (28). Be sure clip is laying on lip as shown in figure 5-4.

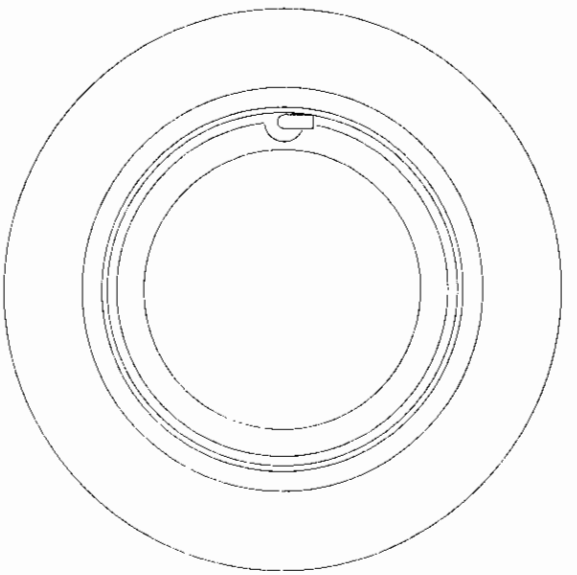

Figure 5-4. Continuity Clip Installation

(19) Connect to inlet elbow per paragraph 4-7.

(20) Install bonding cable assembly per paragraph 4-8.

5-5 HOSE END REGULATOR REPAIR.

This task covers: a. Disassembly b. Inspection c. Assembly

INITIAL SET-UP

Tools

Tool Kit, General Mechanics (Appendix B, Section III, Item 1)
Arbor Press (Appendix B, Section III, Item 5)
Torque wrench (Appendix B, Section III, Item 3)

Equipment Condition

D1 Nozzle removed from service in accordance with TM 10-4930-250-13&P, para. 2-8.

General Safety Requirements

WARNING

- Fuels are toxic and flammable. Do not get on person or clothing. Do not use near open flame. Area should be well ventilated.

Materials/Parts

Rags (Appendix F, Item 4)
Sandpaper (Appendix F, Item 9)
Petrolatum (Appendix F, Item 5)
O-Ring (Appendix J, Item 16)
O-Ring (Appendix J, Item 17)
O-Ring (Appendix J, Item 18)
O-Ring (Appendix J, Item 19)
O-Ring (Appendix J, Item 20)
Seal (Appendix J, Item 21)
Seal (Appendix J, Item 22)
Quad Ring (Appendix J, Item 23)
Spring (Appendix J, Item 24)
O-Ring (Appendix J, Item 25)
Screw (Appendix J, Item 26)

NOTE

Disassemble equipment only to the extent necessary for repair.

a. Disassembly.

WARNING

Death or personal injury may result from explosion of fuel fumes exposed to an open flame or spark or to static discharge. Do not permit smoking, any open flame or spark producing equipment within fifty feet of the repair location.

Rubber gloves should be worn when handling nozzle parts due to toxic effects of some fuel additives.

(1) Remove D1 inlet elbow from the hose end regulator. (Refer to figure 5-5.)

(a) Remove screw (1) and O-ring (2). Discard O-ring (2).

NOTE

To prevent loss of balls place a suitable container under hose end regulator opening.

(b) Hold the hose end regulator (3) with the screw hole pointed down to allow the balls (4) to fall out.

(c) Rotate the hose end regulator (3) back and forth allowing all balls (4) to fall out.

(d) Separate the inlet elbow (5) and the hose end regulator (3).

(e) Remove O-ring (6), seal (7) and O-ring (8) from inlet elbow (5) and discard O-rings and seal.

(2) Remove hose end regulator from nozzle body. (Refer to figure 5-5.)

(a) Remove screw (9) and O-ring (10). Discard O-ring (10).

NOTE

To prevent loss of balls place a suitable container under nozzle body opening.

(b) Hold the nozzle body (11) with the screw hole pointed down to allow the balls (12) to fall out.

(c) Rotate the nozzle body (11) back and forth allowing all balls (4) to fall out.

(d) Separate the nozzle body (11) and the hose end regulator (3).

(e) Remove O-ring (13), seal (14) and O-ring (15) from hose end regulator (3) and discard O-rings and seal.

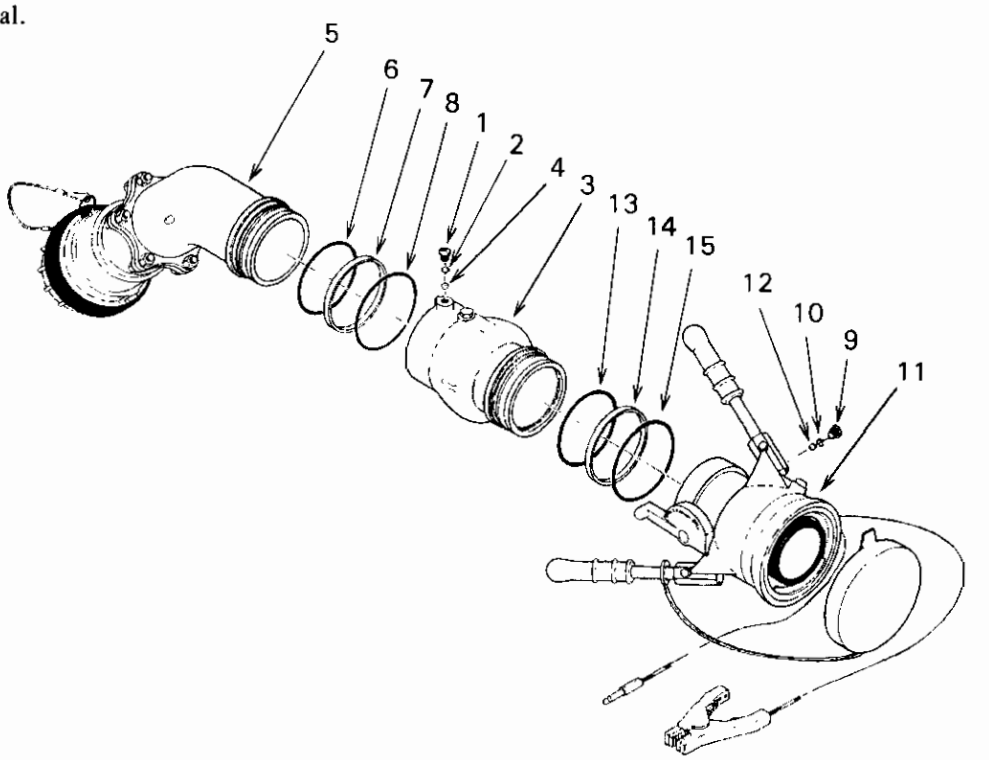

Figure 5-5. D-1R Nozzle Assembly

(3) Disassemble the hose end regulator. (Refer to figure 5-6.)

WARNING

Piston assembly is under an initial spring load of approximately 65 psi. Use care in disassembly to avoid serious injury to personnel and equipment.

NOTE

The piston assembly is composed of the outer piston (1), screw (2), Stat-O-Seal (3) and inner piston (4).

(a) Depress piston assembly using an arbor press or equivalent and remove retaining ring (5) from housing (6).

(b) Slowly release load from arbor press, allowing the piston spring (7) to push the piston assembly out of housing (6). Remove piston assembly and piston spring (7).

NOTE

It is not necessary to separate the piston assembly parts unless replacing part(s). If disassembly is required, complete step (c).

(c) Remove screw (2) to separate the piston assembly. Discard screw (2)

(d) Use a torque wrench to measure the force necessary to remove self-locking screws (8) and washers (9). If the force to remove screws (8) is less tban 1.5 in. lbs. (0.17 Nm), replace the screws during assembly.

CAUTION

When seal retainer (10) is removed spring (11), ball (12) and O-ring (13) are free to fall out and get lost. Work over a rag that will capture spring (11), ball (12) and O-ring (13).

(e) Remove seal retainer (10) by removing the four screws (8) and flat washers (9).

(f) Remove remaining parts; quad ring (14), seal spacers (15), seal (16), O-rings (17), O-ring (13), ball (12) and spring (11). Retain ball (12). Discard all other parts.

(g) Teflon seal (18) and O-ring (19) should only be removed if damaged. If removed replace both during assembly.

(h) Remove and discard outer piston seal (20) and O-ring (21) from housing (6).

NOTE

It is not necessary to remove the breather assembly (22) unless the filter or screen is suspected of being clogged.

(i) If breather assembly (22) is removed for cleaning, flush it vigorously in clean solvent. If unable to get the breather assembly (22) clean, replace the breather assembly (22) during hose end regulator assembly.

(j) Remove O-ring (23) and clip (24) from housing (6). Discard O-ring (23).

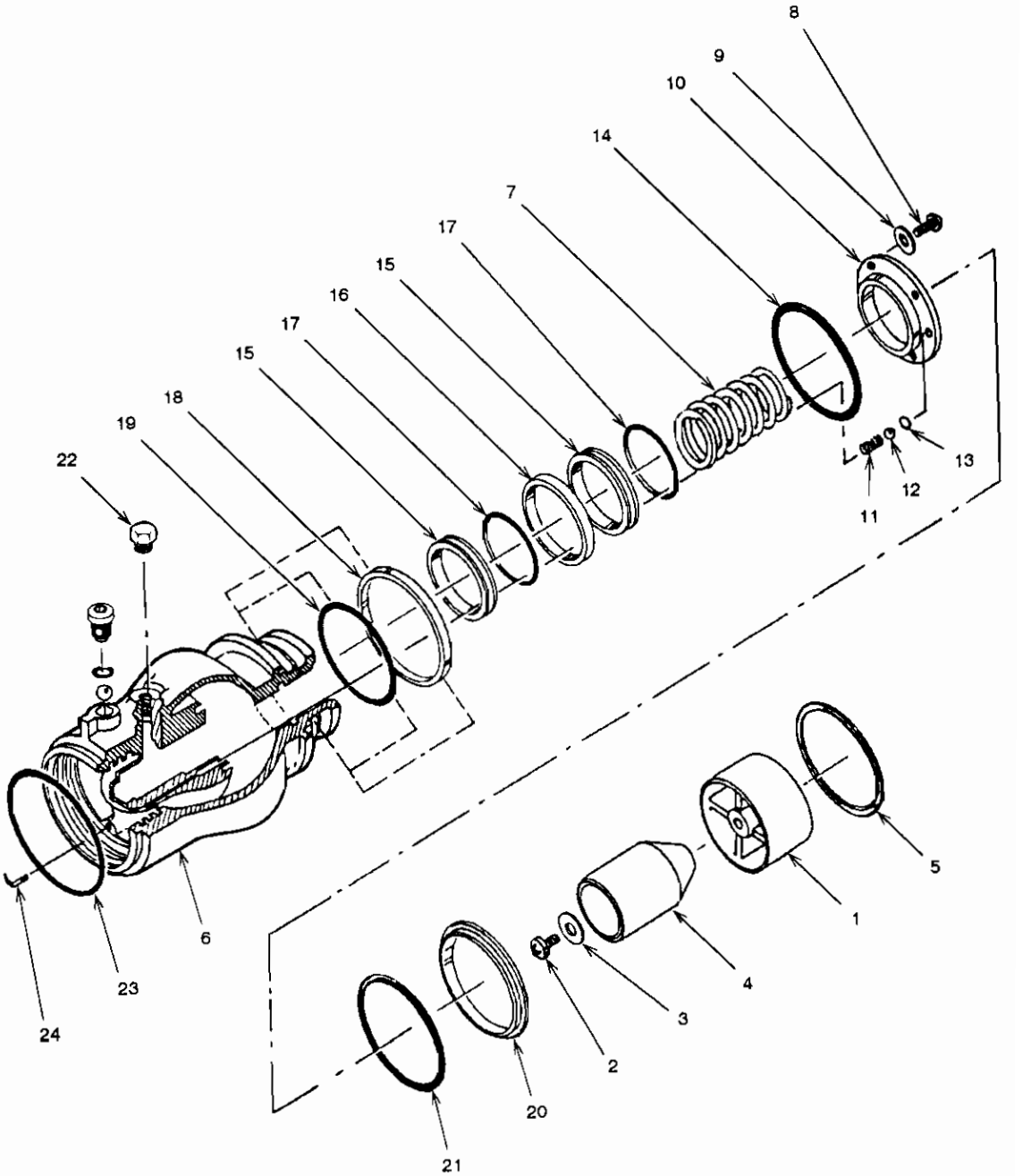

Figure 5-6. 45 PSI Hose End Regulator

b. Inspection.

NOTE

Inspect all metal parts for dings, gouges and abrasions. Complete the following steps as they apply.

(1) Use 320 grit paper to smooth and remove sharp edges.

(2) Replace any part with damage that cannot be smoothed with grit paper.

(3) Check both ends of housing (6) ball races for excessive wear or burrs. Remove any burrs or sharp edges.

(4) The ball races are dry film lubricated. If a ball race is shiny the housing should be replaced or a dry film lubricant applied.

(5) Inspect outer diameters of inner piston (4) and outer piston (1) for scratches. If scratched, replace during assembly.

c. Assembly.

NOTE

O-rings and seals may be lightly lubricated with petrolatum for ease of installation.

(1) Install O-rings (17) in seal spacers (15). Install seal spacer (15) in housing (6).

(2) Install seal (16), then second seal spacer (15).

(3) Install O-ring (23) and clip (24) in housing (6).

(4) If removed, install breather assembly (22) in housing (6).

(5) Install O-ring (21) in outside groove of teflon seal (20) and install teflon seal (20) in housing (6).

(6) If removed, install teflon seal (19) and O-ring (18) in housing (6).

(7) Install quad ring (14) in housing (6).

NOTE

To install spring (11), ball (12) and O-ring (13) recommend applying petrolatum to one end of spring and drop spring in housing (6). Balance the ball on top of the spring. Apply petrolatum to the matching hole on the seal retainer (10) and position the O-ring over the matching hole. The petrolatum will hold the O-ring in position on the seal retainer. Carefully lower the seal retainer in place. This recommended procedure may have to be tried multiple times.

(8) Install spring (11), ball (12) and O-ring (13).

(9) Install seal retainer (10) using screws (8) and washers (9). Hand tighten screws (8) securely.

(10) Attach inner piston (4) to outer piston (1) with screw (2) and Stat-O-Seal (3) . Torque screw (2) to between 18 to 20 in. lbs. (2.03 to 2.26 Nm).

(11) Position spring (7), piston assembly and retaining ring (5) in housing (6).

WARNING

During assembly the spring (7) is going to be compressed. Use care in assembly to avoid serious injury to personnel and equipment.

(12) Use an arbor press or equivalent to compress the piston assembly and spring (7) into housing (6).

(13) Install retaining ring (5) in housing (6) to secure piston assembly in housing (6).

(14) Remove housing from arbor press or equivalent.

(15) Attach D1 inlet elbow on hose end regulator (refer to figure 5-5).

(a) Install O-ring (6), seal (7) and O-ring (8) on inlet elbow (5).

(b) Attach and hold together the inlet elbow (5) and the hose end regulator (3).

NOTE

To prevent loss of balls place a suitable container under hose end regulator opening.

(c) Rotate the bose end regulator (3) and inlet elbow (5) back and forth allowing all balls (4) to fall into the groove as they are dropped in the hose end regulator (3).

(d) When all balls (4) are installed, position O-ring (2) and install screw (1).

(16) Attach hose end regulator to nozzle body (refer to figure 5-5).

(a) Install O-ring (13), seal (14) and O-ring (15) in hose end regulator (3).

(b) Attach and hold together the nozzle body (11) and the hose end regulator (3).

NOTE

To prevent loss of balls place a suitable container under nozzle body opening.

(c) Rotate the nozzle body (11) and hose end regulator (3) back and forth allowing all balls (12) to fall into the groove as they are dropped in the nozzle body (11).

(d) When all balls (12) are installed, position O-ring (10) and install screw (9).

APPENDIX A
REFERENCES

A-1. SCOPE

This appendix lists all forms, field manuals, and technical manuals referenced in this manual.

A-2. PAMPHLETS.

The Army Maintenance Management System (TAMMS)	DA PAM 738-750

A-3. FORMS.

Recommended Changes to Publications and Blank Forms	DA 2028
Product Quality Deficiency Report	SF 368
Equipment Inspection and Maintenance Worksheet	DA 2404
Report of Discrepancy	SF 364

A-4. TECHNICAL MANUALS.

Destruction of Army Materiel to Prevent Enemy Use	TM 750-244-3

A-5. FIELD MANUALS.

NBC Contamination Avoidance	FM 3-3
NBC Protection	FM 3-4
NBC Decontamination	FM 3-5
Petroleum Supply Point Equipment and Operation	FM 10-69
First Aid for Soldiers	FM 21-11

A-6. ARMY REGULATIONS.

The Army Material Maintenance Policy and Retail Operations	AR 750-1

APPENDIX B
MAINTENANCE ALLOCATION CHART

Section I. INTRODUCTION

B-1. THE ARMY MAINTENANCE SYSTEM MAC.

a. This introduction (section I) provides a general explanation of all maintenance and repair functions authorized at various maintenance levels under the standard Army Maintenance System concept.

b. The Maintenance Allocation Chart (MAC) in Section II designates overall authority and responsibility for the performance of maintenance functions on the identified end item or component. The application of the maintenance functions to the end item or component will be consistent with the capacities and capabilities of the designated maintenance levels, which are shown on the MAC in column (4) as:

Unit - Includes two subcolumns, C (operator/crew) and O (unit) maintenance.

Direct Support - Includes an F subcolumn

General support - Includes an H subcolumn.

Depot - Includes a D subcolumn.

c. Section III lists the tools and test equipment (both special tools and common tool sets) required for each maintenance function as referenced from Section II.

d. Section IV contains supplemental instructions and explanatory notes for a particular maintenance function.

B-2. MAINTENANCE FUNCTIONS.

Maintenance functions will be limited to and defined as follows:

a. Inspect. To determine the serviceability of an item by comparing its physical, mechanical and/or electrical characteristics with established standards through examination (e.g., by sight, sound, or feel).

b. Test. To verify serviceability by measuring the mechanical, pneumatic, hydraulic, or electrical characteristics of an item and comparing those characteristics with prescribed standards.

c. Service. Operations required periodically to keep an item in proper operating condition, e.g., to clean (includes decontaminate when required), to preserve, to drain, to paint, or to replenish fuel, lubricants, chemical fluids, or gases.

d. Adjust. To maintain or regulate, within prescribed limits, by bringing into proper position, or by setting the operating characteristics to specified parameters.

e. Aline. To adjust specified variable elements of an item to bring about optimum or desired performance.

f. Calibrate. To determine and cause corrections to be made or to be adjusted on instruments or test, measuring, and diagnostic equipment used in precision measurement. Consists of comparisons of two instruments, one of which is a certified standard of known accuracy, to detect and adjust any discrepancy in the accuracy of the instrument being compared.

B-2. MAINTENANCE FUNCTIONS. - continued

g. Remove/Install. To remove and install the same item when required to perform service or other maintenance functions. Install may be the act of emplacing, seating, or fixing into position a spare, repair part, or module (component or assembly) in a manner to allow the proper functioning of an equipment or system.

h. Replace. To remove an unserviceable item and install a serviceable counterpart in its place. "Replace" is authorized by the MAC and assigned maintenance level is shown as the 3d position code of the SMR code.

i. Repair. The application of maintenance services[1], including fault location/troubleshooting[2], removal/installation, and disassembly/assembly[3] procedures, and maintenance actions[4] to identify troubles and restore serviceability to an item by correcting specific damage, fault, malfunction, or failure in a part, subassembly, module (component or assembly), end item, or system.

j. Overhaul. That maintenance effort (service/action) prescribed to restore an item to a completely serviceable/operational condition as required by maintenance standards in appropriate technical publications (i.e., DMWR). Overhaul is normally the highest degree of maintenance performed by the Army. Overhaul does not normally return an item to like new condition.

k. Rebuild. Consists of those services/actions necessary for the restoration of unserviceable equipment to a like new condition in accordance with original manufacturing standards. Rebuild is the highest degree of material maintenance applied to Army equipment. The rebuild operation includes the act of returning to zero those age measurements (e.g., hours/miles) considered in classifying Army equipment/components.

B-3. EXPLANATION OF COLUMNS IN THE MAC, SECTION II.

a. Column 1, Group Number. Column 1 lists functional group code numbers, the purpose of which is to identify maintenance significant components, assemblies, subassemblies, and modules with the next higher assembly.

b. Column 2, Component/Assembly. Column 2 contains the names of components, assemblies, subassemblies, and modules for which maintenance is authorized.

c. Column 3, Maintenance Functions. Column 3 lists the functions to be performed on the item listed in column 2. (For detailed explanation of these functions, see paragraph B-2.)

---

[1]Services - Inspect, test, service, adjust, align, calibrate, and/or replace.

[2]Fault location/troubleshooting - The process of investigating and detecting the cause of equipment malfunctioning; the act of isolating a fault within a system or unit under test (UUT).

[3]Disassembly/assembly - The step-by-step breakdown (taking apart) of a spare/functional group coded item to the level of its least component, that is assigned an SMR code for the level of maintenance under consideration (e.g., identified as maintenance significant).

[4]Actions - Welding, grinding, riveting, straightening, facing, machining, and/or resurfacing.

d. Column 4. Maintenance Level. Column 4 specifies each level of maintenance authorized to perform each function listed in column 3, by indicating work time required (expressed as man-hours in whole hours or decimals) in the appropriate subcolumn. This work-time figure the active time required to perform that maintenance function at the indicated level of maintenance. If the number or complexity of the tasks within the listed maintenance function vary at different maintenance levels, appropriate work-time figures are to be shown for each level. The work-time figure represents the average time required to restore an item (assembly, subassembly, component, module, end item, or system) to a serviceable condition under typical field operating conditions. This time includes preparation time (including any necessary disassembly/assembly time), troubleshooting/fault location time, and quality assurance time in addition to the time required to perform the specific tasks identified for the maintenance functions authorized in the maintenance allocation chart. The symbol designations for the various maintenance levels are as follows:

C . . . . . Operator or Crew Maintenance
O . . . . . Unit Maintenance
F . . . . . Direct Support Maintenance
H . . . . . General Support Maintenance
D . . . . . Depot Maintenance

e. Column 5. Tools and Equipment Reference Code. Column 5 specifies, by code, those common tool sets (not individual tools) common, TMDE, and special tools, special TMDE, and special support equipment required to perform the designated function. Codes are keyed to tools and test equipment in section III.

f. Column 6, Remarks. When applicable, this column contains a letter code, in alphabetical order, which is keyed to the remarks contained in Section IV.

B-4. EXPLANATION OF COLUMNS IN TOOL AND TEST EQUIPMENT REQUIREMENTS.

a. Column 1. Reference Code. The tool and test equipment reference code correlates with a code used in the MAC, Section II, Column 5.

b. Column 2. Maintenance Level. The lowest level of maintenance authorized to use the tool or test equipment.

c. Column 3. Nomenclature. Name or identification of the tool or test equipment.

d. Column 4. National Stock Number. The National Stock Number of the tool or test equipment.

e. Column 5. Tool Number. The manufacturer's part number or type number.

B-5. EXPLANATION OF COLUMNS IN REMARKS.

a. Column 1. Remarks Code. This code recorded in column 6, Section II.

b. Column 2. Remarks. This column lists information pertinent to the maintenance function being performed as indicated in the MAC, Section II.

SECTION II. MAINTENANCE ALLOCATION CHART FOR D1N-1 and D-1R NOZZLE

(1) Group Number	(2) Component/Assembly	(3) Maintenance Function	(4) Maintenance Level: Unit C	Unit O	Direct Support F	General Support H	Depot D	(5) Tools and Equipment Ref Code	(6) Remarks Code
00	Nozzle Assembly	Inspect	0.1						
		Service	0.1						
		Replace		0.2				1	
01	Camlock Disconnect Assy	Inspect	0.1						
		Service	0.1						
		Replace		0.2				1	
		Repair		0.5				1,3	A
02	Body Assy	Inspect	0.1						
		Service	0.1						
		Replace		0.5				1	
		Repair		0.3	1.8			1,2,4	A
03	2 in. Non-valved Unisex Coupling	Inspect	0.1						
		Replace		0.3				1	
		Repair		0.5				1	A
04	45 psi Hose End Regulator	Inspect	0.1						
		Replace		0.3				1	
		Repair			1.0			1,3	A

Section III. TOOLS AND TEST EQUIPMENT FOR D1N-1 and D-1R NOZZLE

Tool or Test Equipment Ref Code	Maintenance Level	Nomenclature	National Stock number	Tool Number
1	O	Tool Kit, General Mechanics	5180-00-177-7033	SC 5100-90-CL-N26
2	F	Adapter, Pressure Fuel Servicing		MS24484-5
3	O	Shop Equipment, Automotive Maintenance	4910-00-754-0654	SC 4910-95-CL-A74
4	F	Shop Equipment, Electrical Repair	4940-00-294-9517	SC 4940-95-CL-BO5
5	F	Shop Equipment, Automotive Maintenance and Repair	4910-00-754-0705	SC-4910-95-A31

SECTION IV. REMARKS FOR D1N-1 and D-1R NOZZLE

Remarks Code	Remarks
A	Repair consists of replacement of defective or damaged components.

APPENDIX C
UNIT AND DIRECT SUPPORT MAINTENANCE
REPAIR PARTS AND SPECIAL TOOLS LIST (RPSTL)

Section I. INTRODUCTION

C-1. SCOPE.

This RPSTL lists and authorizes spares and repair parts; special tools; special test, measurement, and diagnostic equipment (TMDE); and other special support equipment required for performance of unit and direct support maintenance of the D-1 Nozzle, Models D1N-1 and D-1R. It authorizes the requisitioning, issue, and disposition of spares, repair parts and special tools as indicated by the source, maintainability, and recoverability (SMR) codes.

C-2. GENERAL.

In addition to Section I, Introduction, this Repair Parts and Special Tools List is divided into the following sections:

a. Section II. Repair Parts List. A list of spares and repair parts authorized by this RPSTL for use in the performance of maintenance. The list also includes parts which must be removed for replacement of the authorized parts. Parts lists are composed of functional groups with the parts in each group listed in ascending figure and item number sequence. Bulk materials are listed in item name sequence. Repair parts kits are listed separately in their own functional groups within Section II. Repair parts for repairable special tools are also listed in this section. Items listed are shown on the associated illustration(s)/figures.

b. Section III. Special Tools List. A list of special tools, special TMDE, and other special support equipment authorized by this RPSTL (as indicated by Basis of Issue, BOI,information in DESCRIPTION AND USABLE ON CODE column) for the performance of maintenance.

c. Section IV. Cross Reference Index. A list, in National Item Identification Number (NIIN) sequence, of all National Stock Number (NSN) items appearing in the listing, followed by a list in alphanumeric sequence of all part numbers appearing in the listing. National stock numbers and part numbers are cross-referenced to each illustration figure and item number appearance. The figure and item number index lists figure and item numbers in alphanumeric sequence and cross-references NSN, CAGE and part numbers.

3. EXPLANATION OF COLUMNS (Sections II and III).

a. Item No., Column (1). Indicates the number used to identify items called out in the illustration.

b. SMR CODE, Column (2). The Source, Maintenance and Recoverability (SMR) code is a 5-position code containing supply/requisitioning information, maintenance category authorization criteria, and disposition instructions, as shown in the following breakout.

Source Code	Maintenance Code		Recoverability Code
↓	↓		↓
XX	XX		X
↓			↓
1st and 2nd positions	3rd position	4th position	5th position
↓	↓	↓	↓
How you get an item	Who can install, replace or use the item	Who can do complete repair* on the item	Who determines disposition action on an unserviceable item

*Complete Repair: Maintenance capacity, capability, and authority to perform all the corrective maintenance tasks of the "Repair" function in a use/user environment in order to restore serviceability to a failed item.

(1) Source Code. The source code tells you how you get an item needed for maintenance, repair, or overhaul of an end item/equipment. Explanations of source codes follow.

Code	Explanation
PA PB PC** PD PE PF PG	Stocked items; use the applicable NSN to request/requisition items with these source codes. They are authorized to the category indicated by the code entered in the 3d position of the SMR code. **NOTE : Items codes PC are subject to deterioration.
KD KF KB	Items with these codes are not to be requested/requisitioned individually. They are part of a kit which is authorized to the maintenance category indicated in the 3d position of the SMR code. The complete kit must be requisitioned and applied.
MO (Made at org AVUM level) MF (Made at DS/AVUM level) MH (Made at GS level) ML (Made at Specialized Repair Activity (SRA)) MD (Made at Depot)	Items with these codes are not to be requested/requisitioned individually. They must be made from bulk material which is identified by the part number in the DESCRIPTION and USABLE ON CODE (UOC) column and listed in the Bulk Material group of the repair parts list in the RPSTL. If the item is authorized to you by the 3d position code of the SMR code, but the source code indicates it is made at a higher level, order the item from the higher level of maintenance.
AO (Assembled by org AVUM Level) AF (Assembled by DS/AVUM Level) AH (Assembled by GS Category) AL Assembled by (SRA)) AD (Assembled by Depot)	Items with these codes are not to be requested/requisitioned individually. The parts that make up the assembled item must be requisitioned or fabricated and assembled at the level of maintenance indicated by the source code. If the 3d position code of the SMR code, authorizes you to replace the item, but the source code indicates the items are assembled at a higher level, order the item from the higher level of maintenance.

Code Explanation

XA -- Do not requisition an "XA"-coded item. Order its next higher assembly. (Also, refer to the NOTE below.)

XB -- If an "XB" item is not available from salvage, order it using the CAGEC and part number given.

XC -- Installation drawing, diagram, instruction sheet, field service drawing, that is identified by manufacturer's part number.

XD -- Item is not stocked. Order an "XD"-coded item through normal supply channels using the CAGEC and part number given, if no NSN is available.

C-3. EXPLANATION OF COLUMNS (Sections II and III). - continued

NOTE

Cannibalization or controlled exchange, when authorized, may be used as a source of supply for items with the above source codes, except for those source coded "XA" or those aircraft support items restricted by requirements of AR 700-42.

(2) Maintenance Code. Maintenance codes tell you the level(s) of maintenance authorized to USE and REPAIR support items. The maintenance codes are entered in the third and fourth positions of the SMR Code as follows:

(a) The maintenance code entered in the third position tells you the lowest maintenance category authorized to remove, replace, and use an item. The maintenance code entered in the third position will indicate authorization to one of the following categories of maintenance.

Code Application/Explanation

C - Crew or operator maintenance done within unit or aviation unit maintenance.

O - Unit or aviation unit category can remove, replace, and use the item.

F - Intermediate Direct support or aviation intermediate category can remove, replace, and use the item.

H - Intermediate General support level can remove, replace, and use the item.

L - Specialized repair activity can remove, replace, and use the item.

D - Depot category can remove, replace, and use the item.

(b) The maintenance code entered in the fourth position tells you whether or not the item is to be repaired and identifies the lowest maintenance category with the capability to do complete repair (i.e., perform all authorized repair functions). (NOTE: Some limited repair may be done on the item at a lower category of maintenance, if authorized by the Maintenance Allocation Chart (MAC) and SMR codes.) This position will contain one of the following codes.

Code Application/Explanation

O - Unit or aviation unit is the lowest category that can do complete repair of the item.

F - Intermediate Direct support or aviation intermediate is the lowest category that can do complete repair of the item.

H - Intermediate General support is the lowest category that can do complete repair of the item.

L - Repair restricted to designated specialized repair activity.

D - Depot is the lowest category that can do complete repair of the item.

Z - Non-repairable. No repair is authorized.

B - No repair is authorized. (No parts or special tools are authorized for the maintenance of a "B" coded item.) However, the item may be reconditioned by adjusting, lubricating, etc., at the user level.

(3) Recoverability Code. Recoverability codes are assigned to items to indicate the disposition action on unserviceable items. The recoverability code is entered in the fifth position of the SMR Code as follows.

Recoverability Codes	Definition

Z - Non-repairable item. When unserviceable, condemn and dispose of the item at the category of maintenance shown in third position of SMR Code.

O - Repairable item. When uneconomically repairable, condemn and dispose of the item at unit or aviation unit category.

F - Repairable item. When uneconomically repairable, condemn and dispose of the item at the intermediate direct support or aviation intermediate category.

H - Repairable item. When uneconomically repairable, condemn and dispose of the item at the intermediate general support category.

D - Repairable item. When beyond lower category repair capability, return to depot. Condemnation and disposal of item not authorized below depot category.

L - Repairable item. Condemnation and disposal not authorized below specialized repair activity.

A - Item requires special handling or condemnation procedures because of specific reasons (i.e., precious metal content, high dollar value, critical material, or hazardous material). Refer to appropriate manuals/directives for specific instructions.

c. CAGEC, Column (3). The Commercial And Government Entity Code (CAGEC) is a 5-digit numeric code which is used to identify the manufacturer, distributor, or Government agency, etc., that supplies the item.

d. Part Number, Column (4). Indicates the primary number used by the manufacturer (individual, company, firm, corporation, or Government activity), which controls the design and characteristics of the item by means of its engineering drawings, specifications, standards, and inspection requirements to identify an item or range of items.

NOTE

When you use an NSN to requisition an item, the item you receive may have a different part number from the part ordered, but go ahead and use or furnish it as the replacement part.

e. Description and USABLE ON CODE, Column 5. This column includes the following information:

(1) The Federal item name and, when required, a minimum description to identify the item.

(2) The physical security classification of the item is indicated by the parenthetical entry (insert applicable physical security classification abbreviation, e.g., Phy Sec C1 (C) - Confidential, Phy Sec C1 (S) - Secret, Phy Sec C1 (T) - Top Secret).

(3) Items that are included in kits and sets are listed below the name of the kit or set.

(4) Spare/repair parts that make up an assembled item are listed immediately following the assembled item line entry.

C-3. EXPLANATION OF COLUMNS (Sections II and III). - continued

(5) Part numbers for bulk material are referenced in the description column in the line item entry for the item to be manufactured/fabricated.

(6) When the item is not used, part to be used differs between serial numbers of the same model, the effective serial numbers are shown as the last line of the description.

(7) The USABLE ON CODE, when applicable (see paragraph 4, Special Information).

(8) In the Special Tools List section, the Basis Of Issue (BOI) appears as the last line(s) in the entry for each special tool, special TMDE, and other special support equipment. When density of equipment supported exceeds density spread indicated in the basis of issue, the total authorization is increased proportionately.

(9) The statement "END OF FIGURE" appears just below the last item description in column five for a given figure in both Sections II and III.

f. QTY, Column (6). The QTY (quantity per figure column) indicates the quantity of the item used in the breakout shown on the illustration figure, which is prepared for a functional group, subfunctional group, or an assembly. A "V" appearing in this column in lieu of a quantity indicates that the quantity is variable and the quantity may vary from application to application.

C-4. EXPLANATION OF COLUMNS (SECTION IV).

a. National Stock Number (NSN) Index.

(1) Stock Number Column. This column lists the NSN by National Item Identification Number (NIIN) sequence. The NIIN consists of the last nine digits of the NSN, i.e.,

NSN

(5305-01-574-1467).

NIIN

When using this column to locate an item, ignore the first four digits of the NSN. However, the complete NSN should be used when ordering items by stock number

(2) FIG. Column. This column lists the number of the figure where the item is identified/located. The figures are in numerical order in Section II and Section III.

(3) ITEM. Column. The item number identifies the item associated with the figure listed in the adjacent FIG. column. This item is also identified by the NSN listed on the same line.

b. Part Number Index. Part numbers in this index are listed by part number in ascending alphanumeric sequence (i.e., vertical arrangement of letter and number combination which places the first letter or digit of each group in order A through Z, followed by the numbers) through 9 and each following letter or digit in like order).

(1) CAGEC Column. The Commercial And Government Entity Code (CAGEC) is a five digit numeric code used to identify the manufacturer, distributor, or government agency, etc., that supplies the item.

(2) Part Number Column. Indicates the primary number used by the manufacturer (individual, firm, corporation, or Government activity), which controls the design and characteristics of the item by means of its engineering drawings, specifications standards, and inspection requirements to identify an item or range of items.

(3) Stock Number Column. This column lists the NSN for the associated part number and manufacturer identified in the PART NUMBER and CAGEC columns to the left.

(4) Fig. Column. This column lists the number of the figure where the item is identified/located in Sections II and III.

(5) Item Column. The item number is that number assigned to the item as it appears in the figure referenced in the adjacent figure number column.

c. Figure and Item Number Index.

(1) FIG. Column. This column lists the number of the figure where the item is identified/located in section II and III.

(2) ITEM Column. The item number is that number assigned to the item as it appears in the figure referenced in the adjacent figure number column.

(3) STOCK NUMBER Column. This column lists the NSN for the item.

(4) CAGEC Column. The Commercial and Government Entity Code (CAGEC) is a 5-digit numeric code used to identify the manufacturer, distributor, Government agency, etc. that supplies the item.

(5) PART NUMBER Column. Indicates the primary number used by the manufacturer (individual, firm, corporation or Government activity) which controls the design and characteristics of the item by means of its engineering drawings, specifications, standards and inspection requirements to identify an item or range of items.

5. SPECIAL INFORMATION.

a. USABLE ON CODE. The Usable on Code appears in the lower left corner of the description column heading. Usable on codes are shown as "UOC . . . . . ." in the Description Column (justified left) on the last line applicable item description/nomenclature. Uncoded items are applicable to all models.

UOC	MODEL
FHM	D1N-1
FQB	D-1R

b. ASSOCIATED PUBLICATIONS. See appendix A.

6. HOW TO LOCATE REPAIR PARTS.

a. When National Stock Number or Part Number is NOT Known.

(1) First. Using the table of contents, determine the assembly group or subassembly group to which the item belongs. This is necessary since figures are prepared for assembly groups and subassembly groups, and listings are divided into the same groups.

(2) Second. Find the figure covering the assembly group or subassembly group to which the item belongs.

(3) Third. Identify the item on the figure and use the figure and item number index to find the NSN.

b. When National Stock Number or Part Number is Known.

(1) First. Using the National Stock Number or Part Number index, find the pertinent National Stock Number or Part Number. The NSN index is in National Item Identification Number (NIIN) sequence (see 4.a [1]). The part numbers in the Part Number index are listed in ascending alphanumeric sequence (see paragraph c-4.b). Both indexes cross-reference you to the illustration figure and item number of the item you are looking for.

(2) Second. Turn to the figure and item number, verify that the item is the one you're looking for, then locate the item number in the repair parts list for the figure.

C-7. ABBREVIATIONS.

Abbreviations used in this manual are listed in MIL-STD-12. See glossary for unique abbreviations.

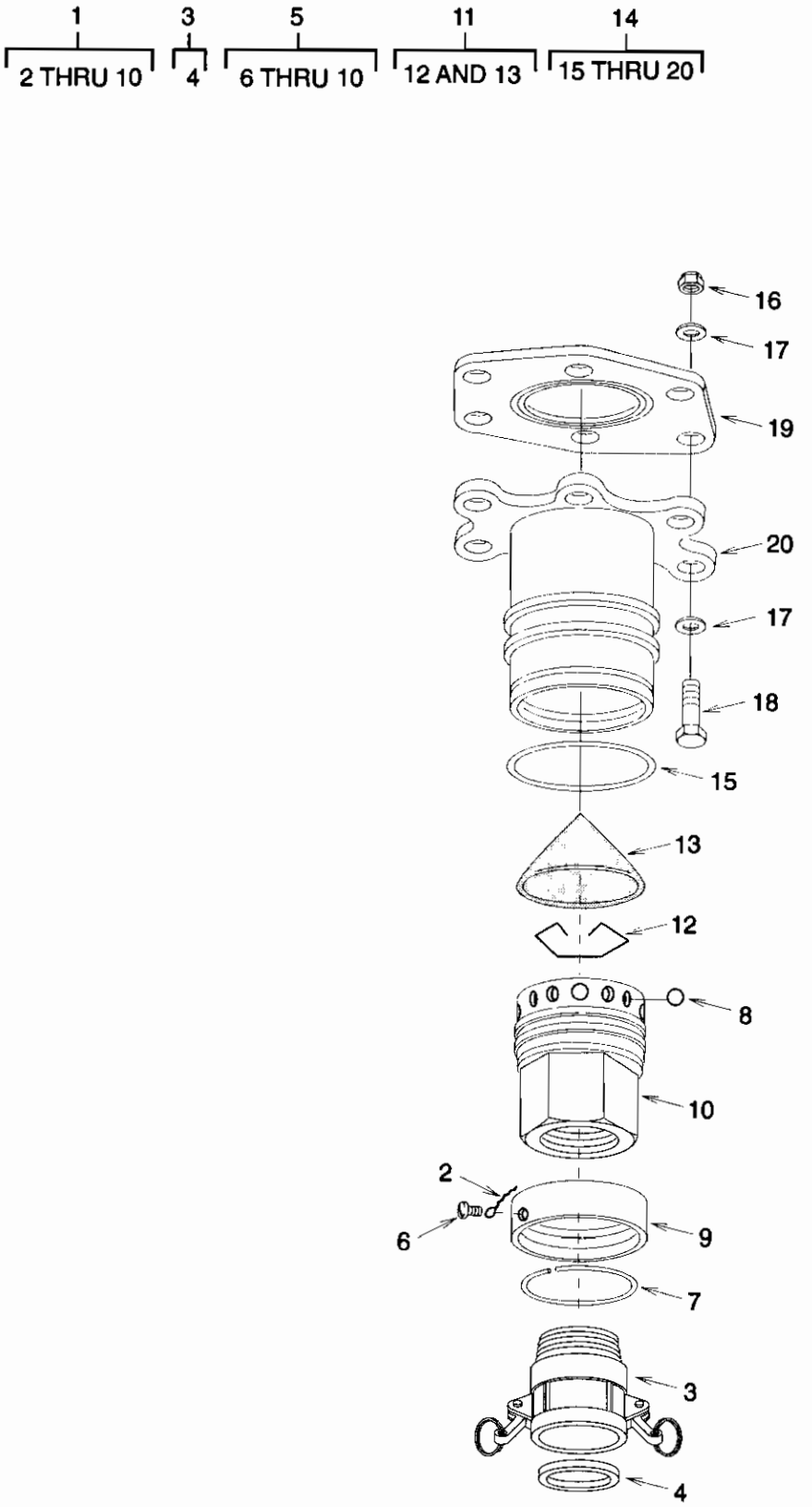

Figure C-1. Camloc Disconnect Assembly

SECTION II

(1) ITEM NO	(2) SMR CODE	(3) CAGEC	(4) PART NUMBER	(5) DESCRIPTION AND USABLE ON CODE(UOC)	(6) QTY
				GROUP 01 CAMLOCK DISCONNECT ASSEMBLY	
				FIG. C-1 CAMLOCK DISCONNECT ASSEMBLY	
1	A0000	0DT23	44771	CAMLOCK DISCONNECT ASSEMBLY . . . . . UOC: FHM	1
2	M00ZZ	0DT23	44771/4	.LOCK WIRE MAKE FROM MS20995C32 (96906) .15 IN LG . . . . . UOC: FHM	1
3	XD0ZZ	96906	MS27026-11	.COUPLING HALF, QUICK . . . . . UOC: FHM	1
4	PA0ZZ	96906	MS27030-6	..GASKET . . . . . UOC: FHM	1
5	XD0ZZ	0DT23	43108-5	.FEMALE HALF QUICK DISCONNECT ASSEMBLY UOC: FHM	1
6	PA0ZZ	96906	MS35275-260	..SCREW, MACHINE . . . . . UOC: FHM	2
7	PA0ZZ	0DT23	25081	..RETAINER . . . . . UOC: FHM	1
8	PA0ZZ	96906	MS19060-4818	..BALL, BEARING . . . . . UOC: FHM	16
9	PA0ZZ	0DT23	25083	..RING, LOCK . . . . . UOC: FHM	1
10	PA0ZZ	0DT23	28691	..HOUSING . . . . . UOC: FHM	1
11	A0000	86090	41767-100	STRAINER ELEMENT, SE . . . . . UOC: FHM	1
12	PA0ZZ	0DT23	208091	.RING, RETAINING . . . . . UOC: FHM	1
13	PA0ZZ	0DT23	210398-100	.SCREEN ASSY, 100 MESH . . . . . UOC: FHM	1
14	A0000	0DT23	43045-1	MALE ADAPTER ASSY, QUICK DISCONNECT . UOC: FHM	1
15	PA0ZZ	0DT23	201201-231	.RING, RETAINING . . . . . UOC: FHM	1
16	PA0ZZ	96906	MS21083C5	.NUT, SELF-LOCKING, HE	6
17	PA0ZZ	88044	AN960C516	.WASHER, FLAT	12
18	PA0ZZ	96906	MS35308-336	.BOLT, MACHINE . . . . . UOC: FHM	6
19	PA0ZZ	96906	MS27194-40	.GASKET . . . . . UOC: FHM	1
20	PA0ZZ	0DT23	203397	.ADAPTER . . . . . UOC: FHM	1

END OF FIGURE

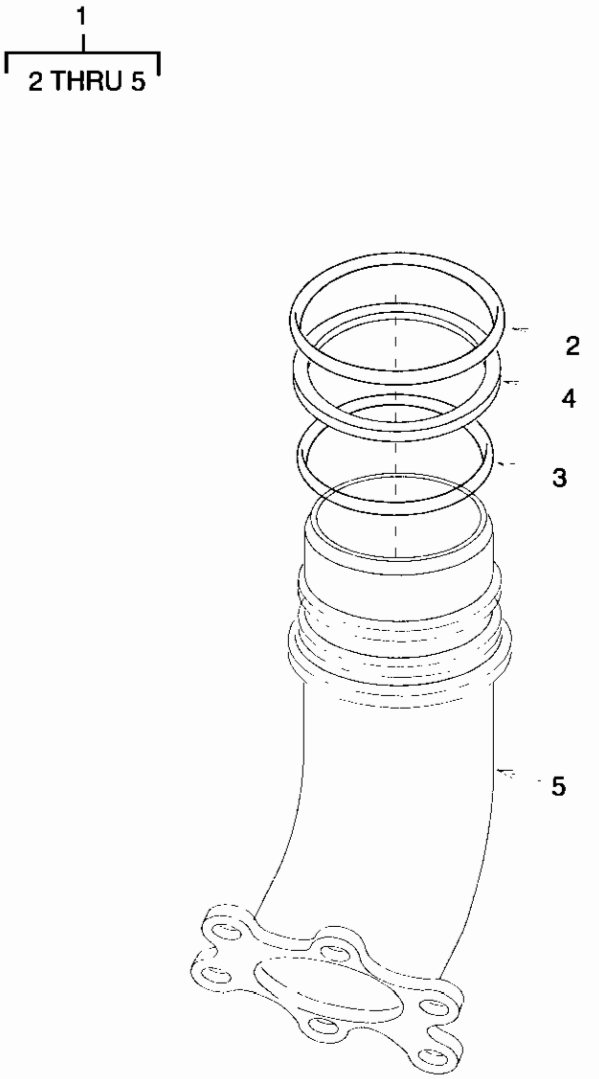

Figure C-2. Inlet Elbow Assembly

(1) ITEM NO	(2) SMR CODE	(3) CAGEC	(4) PART NUMBER	(5) DESCRIPTION AND USABLE ON CODES(UOC)	(6) QTY
				GROUP 01 CAMLOCK DISCONNECT ASSEMBLY	
				FIG. C-2 INLET ELBOW ASSEMBLY	
1	A0000	0DT23	44327	INLET ELBOW ASSY.-Nozzle ?? 4930-01-265-3145	1
2	PAOZZ	81349	M25988/1-235	.PACKING,PREFORMED.5331-01-097-4899	1
3	PAOZZ	81349	M25988/1-040	.PACKING,PREFORMED.5330-01-244-2274	1
4	PAOZZ	0DT23	207807	.SEAL,PLAIN.5336-01-247-1010	1
5	PAOZZ	0DT23	207873	.ELBOW,INLET	1

END OF FIGURE

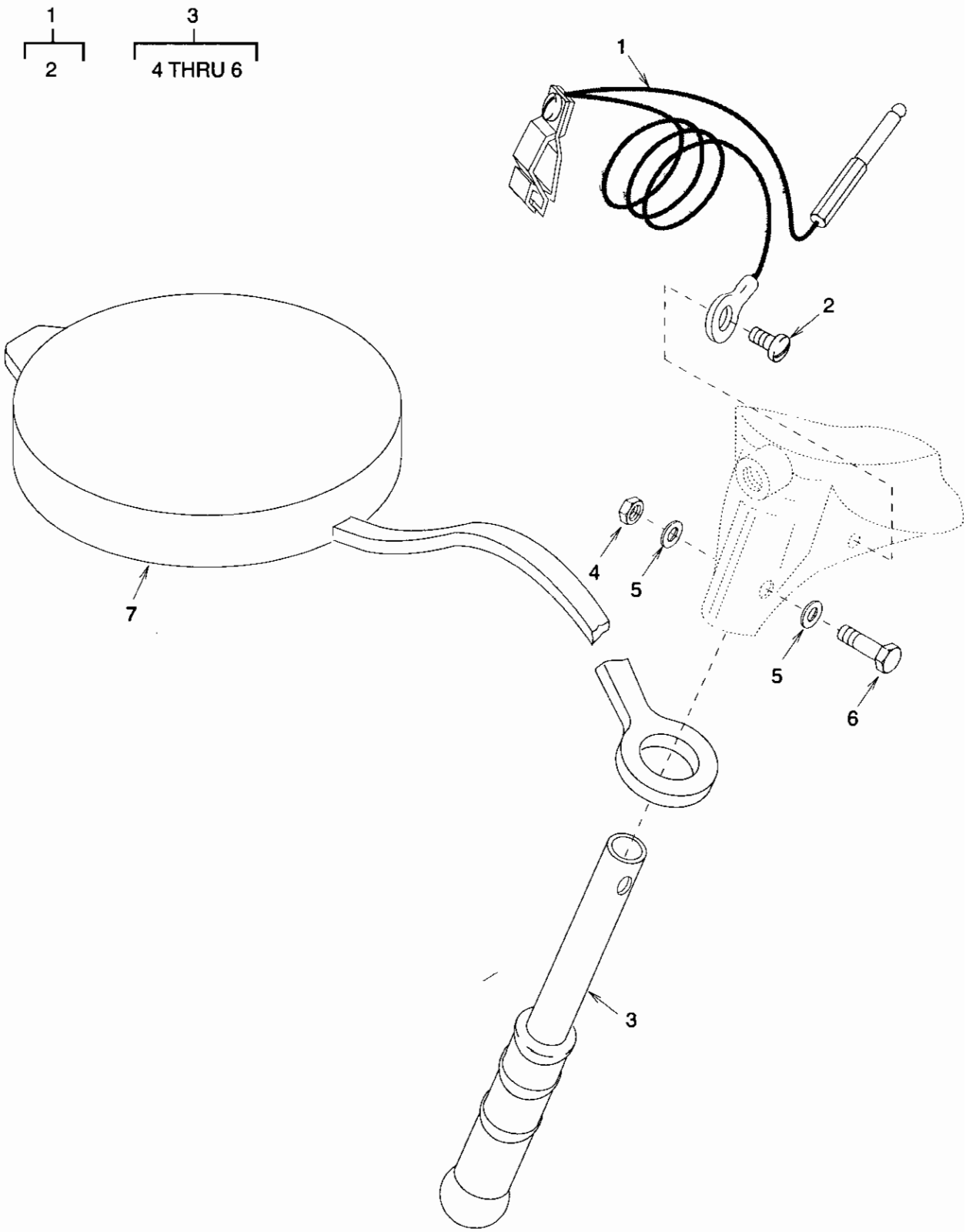

Figure C-3. Grounding Cable, Handle, and Dust Cover

SECTION II

(1) ITEM NO	(2) SMR CODE	(3) CAGEC	(4) PART NUMBER	(5) DESCRIPTION AND USABLE ON CODES(UOC)	(6) QTY
				GROUP 01 CAMLOCK DISCONNECT ASSEMBLY	
				FIG. C-3 GROUNDING CABLE, HANDLE, DUST CAP	
1	PAOZZ	86090	44311	CABLE ASSEMBLY, GROUNDING 6150-01-414-3393	1
2	XDOZZ	03038	LL57N048S5	.SCREW	1
3	PAOZZ	0DT23	44807-1	HANDLE KIT ASSEMBLY 5340-01-413-6109	1
4	XDOZZ	96906	MS21042-4	.NUT,SELF-LOCKING,EX. 5310-00-807-1469	2
5	XDOZZ	88044	AN960-416	.WASHER,FLAT 5310-00-141-1793	4
6	XDOZZ	88044	AN4-13A	.BOLT,MACHINE 5306-00-151-1451	2
7	PAOZZ	0DT23	207799	COVER,ACCESS 5340-01-246-2704	1

END OF FIGURE

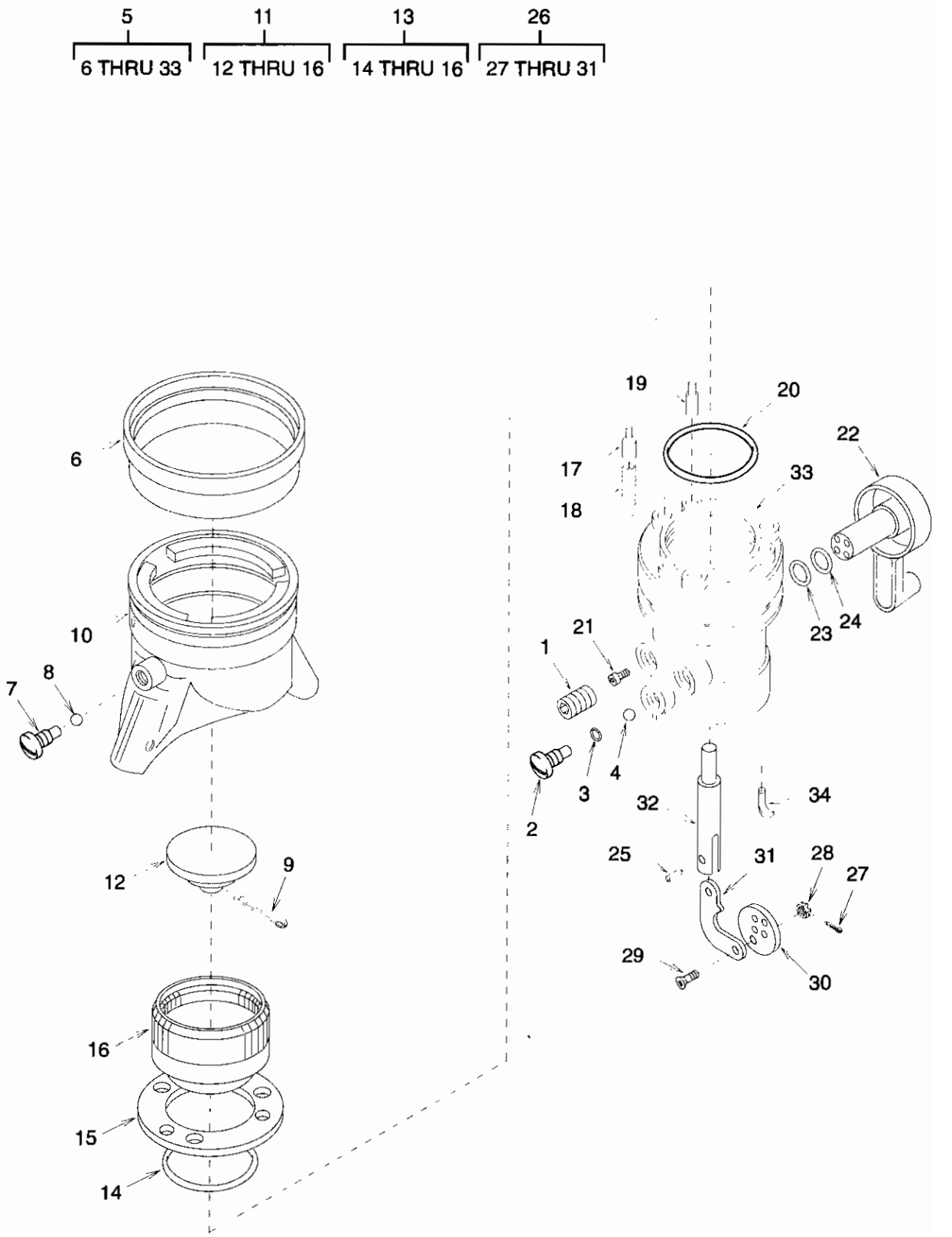

Figure C-4. Nozzle Body Assembly

SECTION II

(1) ITEM NO	(2) SMR CODE	(3) CAGEC	(4) PART NUMBER	(5) DESCRIPTION AND USABLE ON CODE(UOC)	(6) QTY
				GROUP 02 BODY ASSEMBLY	
				FIG. C-4 NOZZLE BODY ASSEMBLY	
1	PAFZZ	0DT23	210388	PLUG	2
2	PAFZZ	0DT23	209827	SCREW, CAP, SOCKET HE	1
3	PAFZZ	96906	MS29513-013	PACKING, PREFORMED	1
4	PAFZZ	0DT23	82123	BALL, BEARING	39
5	AFFZZ	0DT23	47055	BODY ASSEMBLY, REPLACEABLE HANDLES	1
6	PAFZZ	0DT23	23622	.BUMPER, COLLAR, FUEL	1
7	PAFZZ	0DT23	209827	.SCREW, CAP, SOCKET HE	1
8	PAFZZ	0DT23	82123	.BALL, BEARING	49
9	PAFZZ	96906	MS24665-302	.PIN, COTTER PART OF KIT P/N KC 64349-4	1
10	PAFZZ	0DT23	220269	.COLLAR, NOZZLE	
11	AFFZZ	0DT23	47056	.BODY,NOZZLE ASSY	1
12	PAFZZ	0DT23	210593	..DISK,VALVE	1
13	PAFZZ	0DT23	47058	..NOSE SEAL ASSEMBLY	1
14	PAFZZ	0DT23	24636	...SNAP RING	1
15	PAFZZ	0DT23	220271	...PLATE,RETAINING,BEA	1
16	PAFZZ	0DT23	209029	...SEAL,PLAIN ENCASED	1
17	PAFZZ	0DT23	220272	..PIN,SHOULDER,HEADLE	3
18	PAFZZ	0DT23	20909	..SPRING,HELICAL,COMP	3
19	PAFZZ	0DT23	24780	..PIN,INDEX	3
20	PAFZZ	81349	M25988/1-145	..PACKING,PREFORMED PART OF KIT P/N KC64349-4	1
21	PAFZZ	0DT23	LP65U82J12M	..SCREW,CAP LOCKING	4
22	PAFZZ	0DT23	220270	..LEVER,ASSEMBLY, MANU	1
23	PAFZZ	0DT23	227792	..PACKING,PREFORMED PART OF KIT P/N KC64349	1
24	PAFZZ	96906	MS28774-017	..RETAINER,PACKING PART OF KIT P/N KC64349-4	1
25	PAFZZ	0DT23	D9-437	..PIN,STRAIGHT,HEADLE	1
26	AFFZZ	0DT23	44754	..LINK ASSEMBLY	1
27	PAFZZ	96906	MS24665-1013	...PIN,COTTER PART OF KIT P/N KC64349-4	1
28	PAFZZ	88044	AN320C4	...NUT,PLAIN,SLOTTED,H	1
29	PAFZZ	0DT23	207788	...PIN,CRANK	1
30	PAFZZ	0DT23	207783	...PLATE,CAM	1
31	PAFZZ	0DT23	207795	...LINK,VALVE	1
32	PAFZZ	0DT23	210368	..SHAFT,STRAIGHT	1
33	PAFZZ	0DT23	207784	..BODY,NOZZLE,FUEL	1
34	PAFZZ	0DT23	209853	SPRING,HELICAL,COMP	1
35	PAFZZ	0DT23	KC64349-4	SPECIAL PARTS KIT	1
				PACKING,PREFORMED (1) 4-20	
				PACKING,PREFORMED (1) 4-23	
				PIN,COTTER (1) 4-9	
				PIN,COTTER (1) 4-27	
				RETAINER,PACKING (1) 4-24	

END OF FIGURE

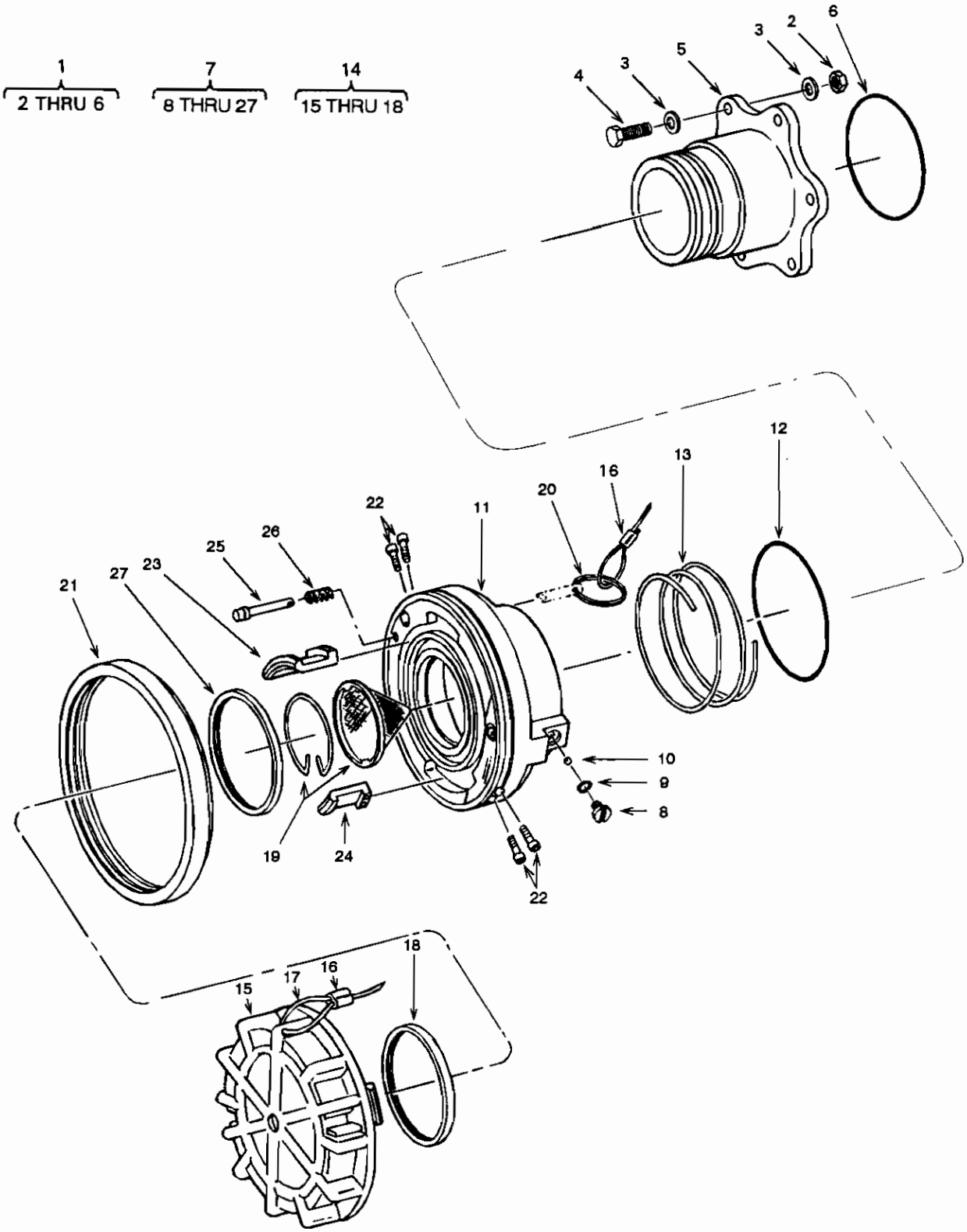

Figure C-4A. Coupling, Unisex, 2-Inch, Non-Valved

SECTION II

(1) ITEM NO	(2) SMR CODE	(3) CAGEC	(4) PART NUMBER	(5) DESCRIPTION AND USABLE ON CODES (UOC)	(6) QTY
				GROUP 03 2-INCH NON-VALVED UNISEX COUPLING	
				FIG.C-4A COUPLING, UNISEX 2-INCH, NON-VALVED	
	PA000	0DT23	64019CN	COUPLING ASSEMBLY, UNISEX, 2-INCH NON-VALVED, D-1 INLET	1
				UOC: FQB	
1	XD000	0DT23	47037-1	.INLET ASSEMBLY.	1
				UOC: FQB	
2	PA0ZZ	96906	MS21083C5	..NUT, SELF-LOCKING	6
3	PA0ZZ	88044	AN960C516	..WASHER, FLAT	12
4	PA0ZZ	96906	MS35308-334	..SCREW	6
				UOC: FQB	
5	PA0ZZ	0DT23	220174-1	..INLET, D-1 FLANGE	1
				UOC: FQB	
6	KF0ZZ	0DT23	201201-151	..PACKING, PREFORMED PART OF KIT P/N KD64019-5	1
				UOC: FQB	
7	XA000	0DT23	64019C	.COUPLING, UNISEX, 2-INCH, NON-VALVED	1
				UOC: FQB	
8	KF0ZZ	96906	MS35206-276	..SCREW PART OF KIT P/N KD64019-5	1
				UOC: FQB	
9	PC0ZZ	96906	MS29513-010	..PACKING, PREFORMED	1
				UOC: FQB	
10	PA0ZZ	0DT23	220265	..BALL	41
				UOC: FQB	
11	XA0ZZ	0DT23	220164-1	..BODY	1
				UOC: FQB	
12	KF0ZZ	96906	MS29513-228	..PACKING, PREFORMED PART OF KIT P/N KD64019-5	1
				UOC: FQB	
13	PA0ZZ	0DT23	220330	..SPRING	1
				UOC: FQB	
14	XD000	0DT23	47062	..DUST CAP ASSY	1
				UOC: FQB	
15	PA0ZZ	0DT23	220162	...CAP	1
				UOC: FQB	
16	PA0ZZ	0DT23	28-2-G	...SLEEVE	2
				UOC: FQB	
17	PA0ZZ	0DT23	220201-1-18	...CABLE	1
				UOC: FQB	
18	KF0ZZ	0DT23	220146	...SEAL PART OF KIT P/N KD64019-5	1
				UOC: FQB	
19	PA0ZZ	86090	47115-100	..SCREEN ASSEMBLY, 100 MESH	1
				UOC: FQB	
20	PA0ZZ	60808	8K1	..RING	1
				UOC: FQB	
21	PA0ZZ	0DT23	220161	..BUMPER	1
				UOC: FQB	
22	PA0ZZ	96906	MS16997-20L	..SCREW, SELF-LOCKING	4
				UOC: FQB	
23	PA0ZZ	0DT23	220159-1	..LUG, LONG	1
				UOC: FQB	
24	PA0ZZ	0DT23	220159-2	..LUG, SHORT	1
				UOC: FQB	

SECTION II

(1) ITEM NO	(2) SMR CODE	(3) CAGEC	(4) PART NUMBER	(5) DESCRIPTION AND USABLE ON CODES (UOC)	(6) QTY
25	PAOZZ	0DT23	220148	..PIN, LOCKOUT	1
				UOC: FQB	
26	PAOZZ	0DT23	220301	..SPRING	1
				UOC: FQB	
27	KFOZZ	0DT23	220146	..SEAL PART OF KIT P/N KD64019-5 . .	1
				UOC: FQB	
28	PCOZZ	0DT23	KD64019-5	.KIT, REPAIR PARTS	
				PACKING, PREFORMED (1) 4A-6	
				PACKING, PREFORMED (1) 4A-12	
				SCREW (1) 4A-8	
				SEAL (1) 4A-18	
				SEAL (1) 4A-27	
				UOC: FQB	

END OF FIGURE

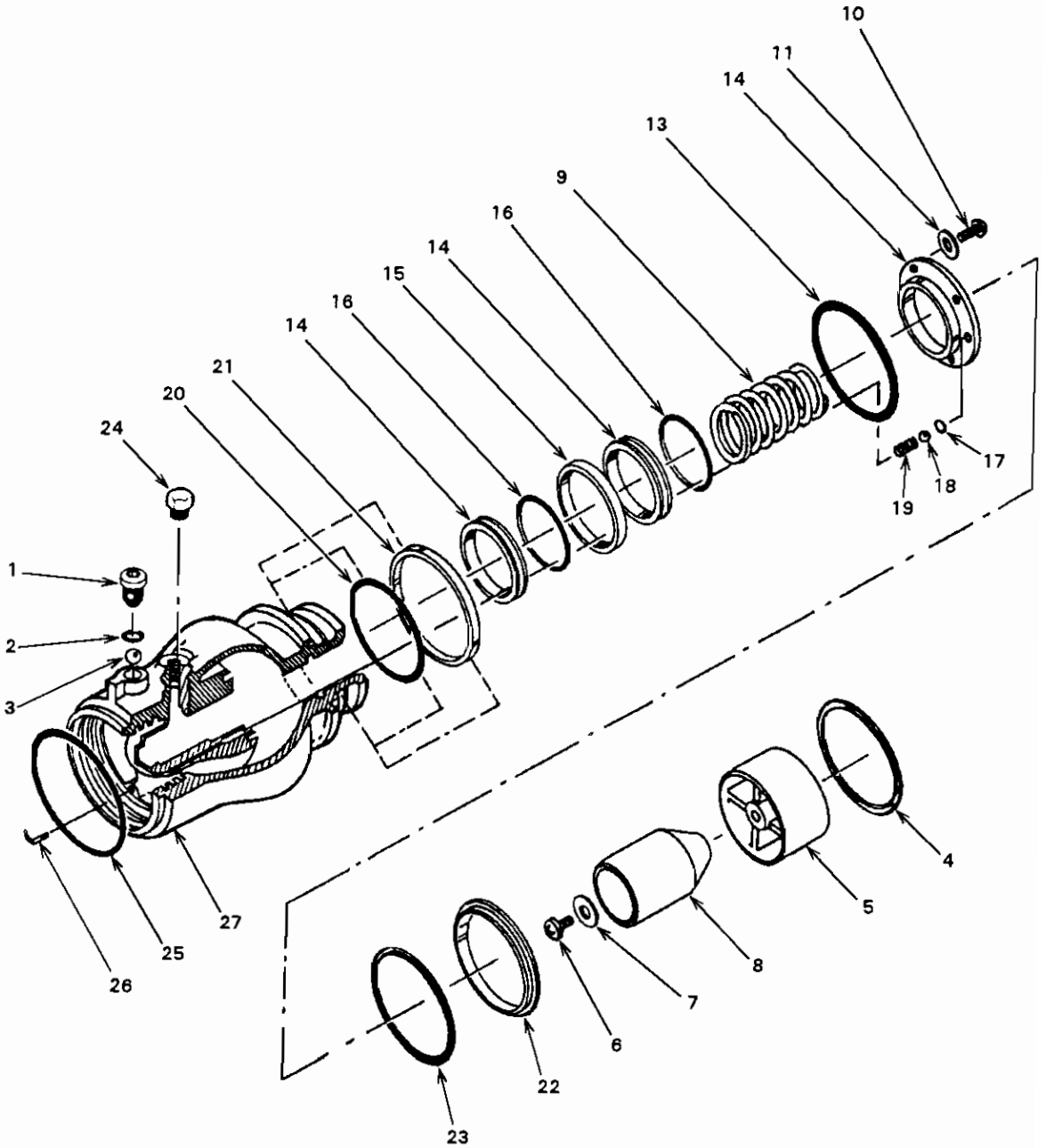

Figure C-4B. 45 PSI Hose End Regulator

SECTION II

(1) ITEM NO	(2) SMR CODE	(3) CAGEC	(4) PART NUMBER	(5) DESCRIPTION AND USABLE ON CODES (UOC) GROUP 04 45 PSI HOSE END REGULATOR FIG.C-4B 45 PSI HOSE END REGULATOR	(6) QTY
	PAOFF	0DT23	44646-45	HOSE END REGULATOR . . . . . UOC: FQB	1
1	XDOZZ	0DT23	220484	.SCREW, CAP . . . . . UOC: FQB	1
2	KFOZZ	96906	MS29512-03	.PACKING, PREFORMED PART OF KIT P/N KD61428-5 . . . . . UOC: FQB	1
3	XDOZZ	0DT23	82123	.BEARING, BALL	39
4	XDFZZ	80756	RRT-268-S	.RING, RETAINING . . . . . UOC: FQB	1
5	XDFZZ	0DT23	23889	.PISTON, OUTER . . . . . UOC: FQB	1
6	XDFZZ	0DT23	LP526C1024R8	.SCREW . . . . . UOC: FQB	1
7	KFFZZ	0DT23	600-001-10	.STAT-O-SEAL PART OF KIT P/N KD61428-5 UOC: FQB	1
8	XDFZZ	0DT23	24096	.INNER PISTON . . . . . UOC: FQB	1
9	XDFZZ	0DT23	23892	.SPRING, 45 PSI (BLACK) . . . . . UOC: FQB	1
10	XDFZZ	0DT23	LP515-8R7	.SCREW . . . . . UOC: FQB	4
11	XDFZZ	88044	AN960-8	.WASHER . . . . . UOC: FQB	4
12	XDFZZ	0DT23	23890	.SEAL RETAINER . . . . . UOC: FQB	1
13	KFFZZ	0DT23	220724-229	.PACKING, PREFORMED PART OF KIT P/N KD61428-5 . . . . . UOC: FQB	1
14	KFFZZ	0DT23	24085	.SEAL PART OF KIT P/N KD61428-5 . . . . UOC: FQB	2
15	KFFZZ	0DT23	24059	.SPACER, SEAL PART OF KIT P/N KD61428-5 UOC: FQB	1
16	KFFZZ	96906	MS29513-126	.PACKING, PREFORMED PART OF KIT P/N KD61428-5 . . . . . UOC: FQB	2
17	KFFZZ	0DT23	220724-007	.PACKING, PREFORMED PART OF KIT P/N KD61428-5 . . . . . UOC: FQB	1
18	XDFZZ	96906	MS19060-1012	.BALL . . . . . UOC: FQB	1
19	XDFZZ	0DT23	210189	.SPRING . . . . . UOC: FQB	1
20	KFFZZ	81349	M25988/1-040	.PACKING, PREFORMED PART OF KIT P/N KD61428-5	1
21	KFFZZ	0DT23	207807	.SEAL PART OF KIT P/N KD61428-5	1
22	KFFZZ	0DT23	23893	.SEAL, OUTER PISTON PART OF KIT P/N KD61428-5 . . . . . UOC: FQB	1
23	KFFZZ	96906	MS29513-147	.PACKING, PREFORMED PART OF KIT P/N KD61428-5 . . . . . UOC: FQB	1
24	XDFZZ	0DT23	40427	.BREATHER ASSEMBLY . . . . . UOC: FQB	1
25	KFFZZ	81349	M25988/1-235	.PACKING, PREFORMED PART OF KIT P/N KD61428-5	1
26	KFFZZ	0DT23	209853	.SPRING, HELICAL PART OF KIT P/N KD61428-5	1
27	XAFZZ	0DT23	209793	.HOUSING . . . . . UOC: FQB	1

SECTION II

(1) ITEM NO	(2) SMR CODE	(3) CAGEC	(4) PART NUMBER	(5) DESCRIPTION AND USABLE ON CODES (UOC)			(6) QTY
				GROUP 04	45 PSI HOSE END REGULATOR		
				FIG.C-4B	45 PSI HOSE END REGULATOR		
28	PAFZZ	ODT23	KD61428-5	KIT, REPAIR PARTS			V
				PACKING, PREFORMED	(1)	4B-3	
				PACKING, PREFORMED	(1)	4B-14	
				PACKING, PREFORMED	(2)	4B-17	
				PACKING, PREFORMED	(1)	4B-18	
				PACKING, PREFORMED	(1)	4B-21	
				PACKING, PREFORMED	(1)	4B-24	
				PACKING, PREFORMED	(1)	4B-26	
				SEAL	(1)	4B-22	
				SEAL	(1)	4B-15	
				SEAL, OUTER PISTON	(1)	4B-23	
				SPACER	(1)	4B-16	
				SPRING, HELICAL	(1)	4B-27	
				STAT-O-SEAL	(1)	4B-8	

END OF FIGURE

(1) ITEM NO	(2) SMR CODE	(3) CAGEC	(4) PART NUMBER	(5) DESCRIPTION AND USABLE ON CODE(UOC)	(6) QTY
				GROUP 05 BULK FIGURE FIG. BULK	
1	PAOZZ	96906	MS20995C32	WIRE,NONELECTRICAL	1
				END OF FIGURE	

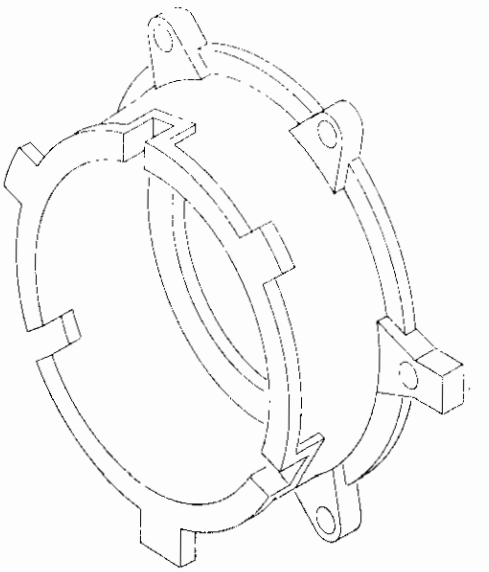

1

Figure C-5. Special Tools

SECTION III

(1) ITEM NO	(2) SMR CODE	(3) CAGEC	(4) PART NUMBER	(5) DESCRIPTION AND USABLE ON CODES(UOC)	(6) QTY
				GROUP 04 SPECIAL TOOLS FIG. C-5 SPECIAL TOOLS	
1	PAOZZ	96906	MS24484-5	ADAPTER, PRESSURE	1

CROSS-REFERENCE INDEXES

NATIONAL STOCK NUMBER INDEX

STOCK NUMBER	FIG.	ITEM	STOCK NUMBER	FIG.	ITEM
3110-00-183-9164	1	8			
3110-00-965-8485	4B	18			
4930-01-053-0185	4B	8			
4930-01-053-0187	4B	22			
4930-01-053-0188	4B	9			
4930-01-053-0189	4B	12			
4930-01-307-2721	4B	24			
4930-01-530-0190	4B	5			
5305-00-988-1720	4A	8			
5305-01-191-4578	4A	22			
5306-00-021-3912	4A	4			
5306-00-021-3915	1	18			
5310-00-020-3260	1	16			
5310-00-167-0803	1	17			
5310-00-515-8058	4B	11			
5310-00-721-4434	4	28			
5315-00-234-1864	4	9			
5315-01-025-4510	4	27			
5330-00-248-2828	4	3			
5330-00-248-3835	4A	9			
5330-00-265-1076	4B	16			
5330-00-531-4588	4B	23			
5330-00-612-2414	1	4			
5330-01-053-0217	4A	6			
5330-01-053-0221	4B	14			
5330-01-338-6641	4B	28			
5330-01-433-9203	4A	18			
5360-01-338-0240	4B	19			
5365-01-053-0186	4B	15			
9505-00-293-4208	BULK	1			

CROSS REFERENCE INDEXES

PART NUMBER INDEX

CAGEC	PART NUMBER	STOCK NUMBER	FIG.	ITEM
0DT23	201201-151	5330-01-053-0217	4A	6
0DT23	201201-231		1	15
0DT23	203397		1	20
0DT23	207783		4	30
0DT23	207784		4	33
0DT23	207788		4	29
0DT23	207792		4	23
0DT23	207795		4	31
0DT23	207799		3	7
0DT23	207807		2	4
0DT23	207873		2	5
0DT23	208091		1	12
0DT23	209029		4	16
0DT23	20909		4	18
0DT23	209793		4B	27
0DT23	209827		4	2
			4	7
0DT23	209853		4	34
0DT23	210189	5360-01-338-0240	4B	19
0DT23	210368		4	32
0DT23	210388		4	1
0DT23	210398-100		1	13
0DT23	210593		4	12
0DT23	220146	5330-01-433-9203	4A	18
0DT23	220148		4A	25
0DT23	220159-1		4A	23
0DT23	220159-2		4A	24
0DT23	220161		4A	21
0DT23	220162		4A	15
0DT23	220163-1		4A	11
0DT23	220174-1		4A	5
0DT23	220201-1-18		4A	17
0DT23	220265		4A	10
0DT23	220269		4	10
0DT23	220270		4	22
0DT23	220271		4	15
0DT23	220272		4	27
0DT23	220301		4A	26
0DT23	220330		4A	13
0DT23	220484		4B	1
0DT23	220724-007		4B	17
0DT23	220724-229		4B	13
0DT23	23622		4	6
0DT23	23889	4930-01-530-0190	4B	5
0DT23	23890	4930-01-053-0189	4B	12
0DT23	23892	4930-01-053-0188	4B	9
0DT23	23893	4930-01-053-0187	4B	22
0DT23	24059	5365-01-053-0186	4B	15
0DT23	24085	5330-01-053-0221	4B	14
0DT23	24096	4930-01-053-0185	4B	8
0DT23	24636		4	14
0DT23	24780		4	19
0DT23	25081		1	7
0DT23	25083		1	9
0DT23	28-2-G		4A	16
0DT23	28691		1	10
86090	40427	4930-01-307-2721	4B	24
86090	41767-100		1	11
0DT23	43045-1		1	14
0DT23	43108-5		1	5
86090	44311		3	1

CROSS REFERENCE INDEXES

PART NUMBER INDEX

CAGEC	PART NUMBER	STOCK NUMBER	FIG.	ITEM
0DT23	44327		2	1
0DT23	44646-45		4B	
0DT23	44754		4	26
0DT23	44771/4		1	2
0DT23	44771		1	1
0DT23	44807-1		3	3
0DT23	47037-1		4A	1
0DT23	47055		4	5
0DT23	47056		4	11
0DT23	47058		4	13
0DT23	47062		4A	14
86090	47115-100		4A	19
0DT23	600-001-10		4B	7
0DT23	64019C		4A	7
0DT23	82123		4	4
60808	8K1		4A	20
88044	AN320C4	5310-00-721-4434	4	28
88044	AN4-13A		3	6
88044	AN960-416		3	5
88044	AN960-8	5310-00-515-8058	4B	11
88044	AN960C516	5310-00-167-0803	1	17
0DT23	D9-437		4	25
0DT23	KC64349-4		4	35
0DT23	KD61428-5	5330-01-338-6641	4B	28
0DT23	KD64019-5		4A	28
03038	LL57N048S5		3	2
0DT23	LP515-8R7		4B	10
0DT23	LP526C1024R8		4B	6
0DT23	LP65U82J12M		4	21
81349	M25988/1-040		2	3
81349	M25988/1-145		4	20
81349	M25988/1-235		2	2
96906	MS16997-20L	5305-01-191-4578	4A	22
96906	MS19060-1012	3110-00-965-8485	4B	18
96906	MS19060-4818	3110-00-183-9164	1	8
96906	MS20995C32	9505-00-293-4208	BULK	1
96906	MS21042-4		3	4
96906	MS21083C5	5310-99-020-3260	1	16
96906	MS24484-5		5	1
96906	MS24665-1013	5315-01-025-4510	4	27
96906	MS24665-302	5315-00-234-1864	4	9
96906	MS27026-11		1	3
96906	MS27030-6	5330-00-612-2414	1	4
96906	MS27194-40		1	19
96906	MS28774-017		4	24
96906	MS29512-03		4B	2
96906	MS29513-010	5330-00-248-3835	4A	9
96906	MS29513-013	5330-00-248-3838	4	3
96906	MS29513-126	5330-00-265-1076	4B	16
96906	MS29513-147	5330-00-531-4588	4B	23
96906	MS29513-228		4A	12
96906	MS35206-276	5305-00-988-1720	4A	8
96906	MS35275-260		1	6
96906	MS35308-334	5306-00-021-3912	4A	4
96906	MS35308-336	5306-00-021-3915	1	18
80756	RRT-268-S		4B	4

CROSS REFERENCE INDEXES

FIGURE AND ITEM NUMBER INDEX

FIG.	ITEM	STOCK NUMBER	CAGEC	PART NUMBER
BULK	1	9505-00-293-4208	96906	MS20995C32
1	1		0DT23	44771
1	2		0DT23	44771/4
1	3		96906	MS27026-11
1	4	5330-00-612-2414	96906	MS27030-6
1	5		0DT23	43108-5
1	6		96906	MS35275-260
1	7		0DT23	25081
1	8	3110-00-183-9164	96906	MS19060-4818
1	9		0DT23	25083
1	10		0DT23	28691
1	11		86090	41767-100
1	12		0DT23	208091
1	13		0DT23	210398-100
1	14		0DT23	43045-1
1	15		0DT23	201201-231
1	16	5310-00-020-3260	96906	MS21083C5
1	17	5310-00-167-0803	88044	AN960C516
1	18	5306-00-021-3915	96906	MS35308-336
1	19		96906	MS27194-40
1	20		0DT23	203397
2	1		0DT23	44327
2	2		81349	M25988/1-235
2	3		81349	M25988/1-040
2	4		0DT23	207807
2	5		0DT23	207873
3	1		86090	44311
3	2		03038	LL57N048S5
3	3		0DT23	44807-1
3	4		96906	MS21042-4
3	5		88044	AN960-416
3	6		88044	AN4-13A
3	7		0DT23	207799
4	1		0DT23	210388
4	2		0DT23	209827
4	3	5330-00-248-3838	96906	MS29513-013
4	4		0DT23	82123
4	5		0DT23	47055
4	6		0DT23	23622
4	7		0DT23	209827
4	8		0DT23	82123
4	9	5315-00-234-1864	96906	MS24665-302
4	10		0DT23	220269
4	11		0DT23	47056
4	12		0DT23	210593
4	13		0DT23	47058
4	14		0DT23	24636
4	15		0DT23	220271
4	16		0DT23	209029
4	17		0DT23	220272
4	18		0DT23	20909
4	19		0DT23	24780
4	20		81349	M25988/1-145
4	21		0DT23	LP65U82J12M
4	22		0DT23	220270
4	23		0DT23	207792
4	24		96906	MS28774-017
4	25		0DT23	D9-437
4	26		0DT23	44754

CROSS REFERENCE INDEXES

FIGURE AND ITEM NUMBER INDEX

FIG.	ITEM	STOCK NUMBER	CAGEC	PART NUMBER
4	27	5315-01-025-4510	96906	MS24665-1013
4	28	5310-00-721-4434	88044	AN320C4
4	29		0DT23	207788
4	30		0DT23	207783
4	31		0DT23	207795
4	32		0DT23	210368
4	33		0DT23	207784
4	34		0DT23	209853
4	35		0DT23	KC64349-4
4A	1		0DT23	47037-1
4A	2		96906	MS21083C5
4A	3	5310-00-167-0803	88044	AN960C516
4A	4	5306-00-021-3912	96906	MS35308-334
4A	5		0DT23	220174-1
4A	6	5330-01-053-0217	0DT23	201201-151
4A	7		0DT23	64019C
4A	8		96906	MS35206-276
4A	9	5330-00-248-3835	96906	MS29513-010
4A	10		0DT23	220265
4A	11		0DT23	220163-1
4A	12		96906	MS29513-228
4A	13		0DT23	220330
4A	14		0DT23	47062
4A	15		0DT23	220162
4A	16		0DT23	28-2-G
4A	17		0DT23	220201-1-18
4A	18	5330-01-433-9203	0DT23	220146
4A	19		86090	47115-100
4A	20		60808	8K1
4A	21		0DT23	220161
4A	22	5305-01-191-4578	96906	MS16997-20L
4A	23		0DT23	220159-1
4A	24		0DT23	220159-2
4A	25		0DT23	220148
4A	26		0DT23	220301
4A	27		0DT23	220146
4A	28		0DT23	KD64019-5
4B			0DT23	44646-45
4B	1		0DT23	220484
4B	2		96906	MS29512-03
4B	3	3110-01-247-1056	0DT23	82123
4B	4		80756	RRT-268-S
4B	5	4930-01-053-0190	0DT23	23889
4B	6		0DT23	LP526C1024R8
4B	7		0DT23	600-001-10
4B	8	4930-01-053-0185	0DT23	24096
4B	9	4930-01-053-0188	0DT23	23892
4B	10		0DT23	LP515-8R7
4B	11	5310-00-515-8058	88044	AN960-8
4B	12	4930-01-053-0189	0DT23	23890
4B	13		0DT23	220724-229
4B	14	5330-01-053-0221	0DT23	24085
4B	15	5365-01-053-0186	0DT23	24059
4B	16	5330-00-265-1076	96906	MS29513-126
4B	17		0DT23	220724-007
4B	18	3110-00-965-8485	96906	MS19060-1012
4B	19	5360-01-338-0240	0DT23	210189
4B	20	5330-01-244-2274	81349	M25988/1-040
4B	21		0DT23	207807
4B	22	4930-01-053-0187	0DT23	23893

CROSS REFERENCE INDEXES

FIGURE AND ITEM NUMBER INDEX

FIG.	ITEM	STOCK NUMBER	CAGEC	PART NUMBER
4B	23	5330-00-531-4588	96906	MS29513-147
4B	24	4930-01-307-2721	86090	40427
4B	25	5330-01-007-4899	81349	M25988/1-235
4B	26	5360-01-246-2501	0DT23	209853
4B	27		0DT23	209793
4B	28	5330-01-338-6641	0DT23	KD61428-5
5	1		96906	MS24484-5

APPENDIX D
COMPONENTS OF END ITEM (COEI) AND BASIC ISSUE ITEMS (BII) LIST

Section I. INTRODUCTION

D-1. SCOPE.

This appendix lists components of end item and basic issue items for the D-1 Nozzle to help you inventory the items required for safe and efficient operation of the equipment.

D-2. GENERAL.

The Components of End Item (COEI) and Basic Issue Items (BII) Lists are divided into the following sections.

a. Section II, Components of End Item. This listing is for information purposes only, and is not authority to requisition replacements. These items are part of the D-1 Nozzle. As part of the end item, these items must be with the end item whenever it is issued or transferred between property accounts. Items of COEI are removed and separately packaged for transportation or shipment only when necessary. Illustrations are furnished to help you find and identify the items.

b. Section III, Basic Issue Items. These essential items are required to place the D-1 Nozzle in operation, operate it, and to do emergency repairs. Although shipped separately packaged, BII must be with the D-1 Nozzle during operation and when it is transferred between property accounts. This list is your authority to request/requisition them for replacement based on authorization of the end item by the TOE/MTOE. Illustrations are furnished to help you find and identify the items.

D-3. EXPLANATION OF COLUMNS.

The following provides an explanation of columns found in the tabular listings.

a. Column (1), Illus Number, gives you the number of the item illustrated.

b. Column (2), National Stock Number, identifies the stock number of the item to be used for requisitioning purposes.

c. Column (3), Description and Usable On Code, identifies the Federal item name (in all capital letters) followed by a minimum description when needed. The last line below the description is the Commercial And Government Entity Code (CAGEC) (in parentheses) and the part number.

d. Column (4), U/I (unit of issue), indicates how the item is issued for the National Stock Number shown in column two.

e. Column (5), Qty Rqd, indicates the quantity required.

Section II. COMPONENTS OF END ITEM

(1) Illus. Number	(2) National Stock Number	(3) Description CAGEC and Part Number	(4) U/M	(5) Qty Rqr
		NOT APPLICABLE		

Section III. BASIC ISSUE ITEMS

(1) Illus. Number	(2) National Stock Number	(3) Description CAGEC and Part Number	(4) U/M	(5) Qty Rqr
		Department of the Army Technical Manual; Operator's, Unit, and Direct Support Maintenance Manual Including Repair Parts and Special Tools List (RPSTL) TM 10-4930-246-13&P	EA	1

APPENDIX E
ADDITIONAL AUTHORIZATION LIST (AAL)

Additional authorization list not required.

APPENDIX F
EXPENDABLE AND DURABLE ITEMS LIST

Section I. INTRODUCTION

F-1. SCOPE.

This appendix lists expendable and durable items that you will need to operate and maintain the nozzle. This listing is for information only and is not the authority to requisition the listed items. These items are authorized to you by CTA 50-970, Expendable/Durable Items (except medical, class V, repair parts, and heraldic items), or CTA 8-100, Army Medical Department Expendable/Durable Items.

F-2. EXPLANATION OF COLUMNS.

a. Column 1. Item Number. This number is assigned to the entry in the listing and is referenced in the narrative instructions to identify the material (e.g., "Use adhesive, cyanoacrylate, Item 1, Appendix F").

b. Column 2. Level. This column identifies the lowest level of maintenance that requires the listed item.

c. Column 3. National Stock Number. This is the national stock number assigned to the item; which you can use to requisition it.

d. Column 4. Item name, description, Commercial and Government Entity Code (CAGEC), and part number. This provides the other information you need to identify the item.

e. Column 5. Unit of measure. This code shows the physical measurement or count of an item, such as gallon,dozen, gross, etc.

Section II. EXPENDABLE AND DURABLE ITEMS LIST

(1) ITEM NO.	(2) LEVEL	(3) NATIONAL STOCK NUMBER	(4) ITEM NAME, DESCRIPTION CAGEC, PART NUMBER	(5) U/M
1	F	8040-01-140-0954	Adhesive, cyanoacrylate, rapid room temperature curing, solventless (Super Glue): M46050-B-3-01	oz
2	O	7930-00-764-5066	Detergent, Dishwasher	oz
3	O	6850-01-377-1809	Dry Cleaning Solvent: (81348) P-D-680, Type II	gl
4	O	7920-00-205-1711	Rags	pg
5	F	9150-00-250-0926	Petrolatum VV-P-236	lb
6	O	8030-00-899-3535	Tape, Anti-seize: (81349) MIL-G-4343	tu
7	O	7930-01-350-7034	Purging Solution	gl
8	O		Lock Wire: (96906) MS20995C32	rl
9	F		Sandpaper, 320 grit	sh

APPENDIX G
LUBRICATION INSTRUCTIONS

Lubrication not required.

APPENDIX H
ILLUSTRATED LIST OF MANUFACTURED ITEMS

No manufactured items required.

APPENDIX I
TORQUE LIMITS

Torque limits not required.

APPENDIX J
MANDATORY REPLACEMENT PARTS

Item Number	Nomenclature	CAGEC	Part Number
1	O-Ring	86090	201201-231
2	Gasket	96906	MS27194-40
3	O-Ring	81349	M25988/1-235
4	O-Ring	81349	M25988/1-040
5	Seal	0DT23	207807
6	O-Ring	96906	MS29513-013
7	Back-up Ring	96906	MS28774-017
8	O-Ring	0DT23	207792
9	O-Ring	81349	M25988/1-145
10	Cotter Pin	0DT23	MS24665-1013
11	Cotter Pin	0DT23	MS24665-302
12	Lock Wire (Approx 15 in. long)	96906	MS20995C32
13	Lock Nut	0DT23	MS21083-C5
14	Self Locking Nut	0DT23	MS21042-4
15	Seal	0DT23	24085
16	O-Ring	96906	MS29513-126
17	O-Ring	96906	220724-007
18	O-Ring	96906	MS29513-147
19	O-Ring	96906	MS29513-227
20	O-Ring	96906	MS29513-010
21	Seal	0DT23	220146
22	Seal	0DT23	23893
23	Quad-Ring	0DT23	220724-229
24	Spring	0DT23	210189
25	O-Ring	96906	MS29512-03
26	Screw	0DT23	LP526C1024R8

GLOSSARY

Section I. ABBREVIATIONS

AAL.....Additional Authorization List
AMDF.....Army Master Data File
ATTN.....Attention
Blvd.....Boulevard
BOI.....Basis Of Issue
C.....Centigrade
CAGEC.....Commercial And Government Entity Code
cm.....Centimeter
CPC.....Corrosion Prevention and Control
e.g.....for example
EIR.....Equipment Improvement Recommendation
Equip.....Equipment
etc.....etcetera
F.....Fahrenheit
FIG.....Figure
gpm.....Gallons Per Minute
kPa.....KiloPascal
l.....Liter
MAC.....Maintenance Allocation Chart
MO.....Missouri
MTOE.....Modified Table of Organization and Equipment
NBC.....Nuclear, Biological, and Chemical
NIIN.....National Item Identification Number
No.....Number
NSN.....National Stock Number
PMCS.....Preventive Maintenance Checks and Services
QTY.....Quantity
Ref.....Reference
RPSTL.....Repair Parts and Special Tools List
s.....Second
SMR.....Source Maintenance and Recoverability
St.....Saint
TMDE.....Test Measurement and Diagnostic Equipment
U.S.....United States
UOC.....Usable On Code
UUT.....Unit Under Test

Section II. DEFINITION OF UNUSUAL TERMS

None

ALPHABETICAL INDEX

Subject, Paragraph

A

Assembly and Preparation for Use, 2-5

B

Body Assembly Repair, 5-4

C

Camlock Disconnect Assembly Replacement and Repair, 4-6
Capabilities, Equipment Characteristics, and Features, 1-6
Checks, Initial Adjustments, and Self-Test (D1N-1 Nozzle), 2-6
Checks, Initial Adjustments, and Self-Test (D-1R Nozzle), 2-12
Common Tools and Equipment, 4-1
Corrosion Prevention and Control (CPC), 1-3
Coupling, Unisex, Repair of, 4-6.1

D

Data, Equipment, 1-8
Decals and Instruction Plates, 2-8
Decontamination, Nuclear, Biological, and Chemical (NBC), 2-11
Description and Location of Major Components (D1N-1 Nozzle), 1-7
Description and Location of Major Components (D-1R Nozzle), 1-8
Destruction of Army Materiel to Prevent Enemy Use, 1-4
Disconnect Assembly, Camlock, Replacement and Repair, 4-6
Dusty or Sandy Environment and Salt Air or Sea Spray, 2-10

E

Elbow, Inlet, Replacement, 4-7
Equipment and Common Tools, 4-1, 5-1
Equipment Characteristics, Capabilities, and Features, 1-6
Equipment Data, 1-8
Extreme Cold, 2-9

Subject, Paragraph

F

Features, Equipment Characteristics, and Capabilities, 1-6

G

General Principles of Operation, 1-9
General, 2-1, 2-2, 3-1, 4-5

H

Hose End Regulator, Repair of, 5-9

I

Initial Adjustments, Checks, and Self-Tests (D1N-1 Nozzle), 2-6
Initial Adjustments, Checks, and Self-Tests (D-1R Nozzle), 2-12
Inlet Elbow Replacement, 4-7
Inspection and Unpacking, 4-3
Installation, 4-4
Instruction Plates and Decals, 2-8

L

Leakage Definitions for Operator PMCS, 2-4
Location and Description of Major Components (D1N-1 Nozzle), 1-7
Location and Description of Major Components (D-1R Nozzle), 1-8

M

Maintenance Forms and Procedures, 1-2
Major Components, Location and Description of (D1N-1 Nozzle), 1-7
Major Components, Location and Description of (D-1R Nozzle), 1-8

N

Nozzle Body Assembly Repair, 4-8
Nuclear, Biological, and Chemical (NBC) Decontamination, 2-11

Subject, Paragraph

O

Operating Procedures, 2-12.5
Operator PMCS, Leakage Definitions for, 2-4

P

PMCS Procedures (D1N-1 Nozzle), 2-6
PMCS Procedures (D-1R Nozzle), 2-12
Preparation for Shipment, 4-10
Preparation for Storage, 4-9
Preparation for Use, and Assembly, 2-5
Principles of Operation, General, 1-9
Procedures, Operating, 2-7

R

Regulator, Hose End, Repair of, 5-9
Repair Parts, 4-2,5-3
Reporting Equipment Improvement Recommendation (EIR), 1-5

Subject, Paragraph

S

Safety Interlocks, 1-6
Salt Air or Sea Spray and Dusty or Sandy Environment, 2-10
Sandy or Dusty Environment and Salt Air or Sea Spray, 2-10
Scope, 1-1
Sea Spray or Salt Air and Dusty or Sandy Environment, 2-10
Self-Test, Initial Adjustments, and Checks (D1N-1 Nozzle), 2-6
Self-Test, Initial Adjustments, and Checks (D-1R Nozzle), 2-12
Shipment, Preparation For, 4-10
Special Tools, 5-2
Storage, Preparation for, 4-9

U

Unisex Coupling, Repair of, 4-6.1
Unpacking and Inspection, 4-3

By Order of the Secretary of the Army:

GORDON R. SULLIVAN
General, United States Army
Chief of Staff

Official:

MILTON H. HAMILTON
Administrative Assistant to the
Secretary of the Army
08054

DISTRIBUTION:
To be distributed in accordance with Special Distribution List.

☆U.S. GOVERNMENT PRINTING OFFICE: 1997 - 406-421/62389

RECOMMENDED CHANGES TO EQUIPMENT TECHNICAL PUBLICATIONS

THEN. . JOT DOWN THE DOPE ABOUT IT ON THIS FORM. CAREFULLY TEAR IT OUT, FOLD IT AND DROP IT IN THE MAIL!

SOMETHING WRONG WITH THIS PUBLICATION?

FROM: (PRINT YOUR UNIT'S COMPLETE ADDRESS)
PFC JOHN DOE
COA, 3d ENGINEER BN
FT. LEAVENWORTH, MO 63108

DATE SENT

PUBLICATION NUMBER	PUBLICATION DATE	PUBLICATION TITLE
TM 10-4930-246-13&P	7 FEB 1995	Operator's Unit, & Direct Support Maint. Incl. RPSTL for D-1 Nozzle

BE EXACT PIN-POINT WHERE IT IS

PAGE NO	PARA-GRAPH	FIGURE NO	TABLE NO	IN THIS SPACE TELL WHAT IS WRONG AND WHAT SHOULD BE DONE ABOUT IT:
6	2-1 a			In line 6 of paragraph 2-1a the manual states the engine has 6 Cylinders. The engine on my set only has 4 Cylinders. Change the manual to show 4 Cylinde
B1		4-3		C figure 4-3 is a bolt. In key 4-3, item 16 is called rim - Please correct on the Other.
125	line 20			I ordered a gasket, item 19 on figure B-16 by NSN 2910-00-762-3001. I got a gasket but it doesn't fit. Supply says I got what I ordered, so the NSN is wrong. Please give me a good NSN

Sample

TEAR ALONG PERFORATED LINE

PRINTED NAME, GRADE OR TITLE, AND TELEPHONE NUMBER: JOHN DOE, PFC (268) 317-7111

SIGN HERE: John Doe
JOHN DOE

DA FORM 1 JUL 79 2028-2

PREVIOUS EDITIONS ARE OBSOLETE.

DRSTS-M Overprint 1, 1 Nov 80

P.S.--IF YOUR OUTFIT WANTS TO KNOW ABOUT YOUR RECOMMENDATION MAKE A CARBON COPY OF THIS AND GIVE IT TO YOUR HEADQUARTERS

REVERSE OF DA FORM 2028-2 AMSMC OP-103-85

FILL IN YOUR UNIT'S ADDRESS

FOLD BACK

DEPARTMENT OF THE ARMY

OFFICAL BUSINESS

NO POSTAGE NECESSARY IF MAILED IN THE UNITED STATES

BUSINESS REPLY MAIL

FIRST CLASS BRM PERMIT NO. 82 ROCK ISLAND, IL

POSTAGE WILL BE PAID BY ROCK ISLAND ARSENAL

Director
Armament and Chemical Acquisition
and Logistics Activity
ATTN: AMSTA-AC-NML
ROCK ISLAND, IL 61201-9948

TEAR ALONG PERFORATED LINE

RECOMMENDED CHANGES TO EQUIPMENT TECHNICAL PUBLICATIONS

THEN . .JOT DOWN THE DOPE ABOUT IT ON THIS FORM,CAREFULLYTEAR IT OUT, FOLD IT AND DROP IT IN THE MAIL!

SOMETHING WRONG WITH THIS PUBLICATION?

FROM: (PRINT YOUR UNIT'S COMPLETE ADDRESS)

DATE SENT

PUBLICATION NUMBER	PUBLICATION DATE	PUBLICATION TITLE
TM 10-4930-246-13&P	7 FEB 1995	Operator's Unit, & Direct Support Maint. Incl. RPSTL for D-1 Nozzle

BE EXACT PIN-POINT WHERE IT IS

PAGE NO	PARA-GRAPH	FIGURE NO	TABLE NO

IN THIS SPACE, TELL WHAT IS WRONG AND WHAT SHOULD BE DONE ABOUT IT:

PRINTED NAME, GRADE OR TITLE, AND TELEPHONE NUMBER

SIGN HERE

DA FORM 1 JUL 79 2028-2

PREVIOUS EDITIONS ARE OBSOLETE.

DRSTS-M verprint2, 1 Nov 80

P.S.- - IF YOUR OUTFIT WANTS TO KNOW ABOUT YOUR RECOMMENDATION, MAKE A CARBON COPY OF THIS AND GIVE TO YOUR HEADQUARTERS.

REVERSE OF DA FORM 2028-2 AMSMC OP-103-85

FILL IN YOUR UNIT'S ADDRESS

FOLD BACK

DEPARTMENT OF THE ARMY

OFFICAL BUSINESS

NO POSTAGE NECESSARY IF MAILED IN THE UNITED STATES

BUSINESS REPLY MAIL

FIRST CLASS BRM PERMIT NO. 82 ROCK ISLAND, IL

POSTAGE WILL BE PAID BY ROCK ISLAND ARSENAL

Director
Armament and Chemical Acquisition
and Logistics Activity
ATTN: AMSTA-AC-NML
ROCK ISLAND, IL 61201-9948

TEAR ALONG PERFORATED LINE

RECOMMENDED CHANGES TO EQUIPMENT TECHNICAL PUBLICATIONS

THEN . .JOT DOWN THE DOPE ABOUT IT ON THIS FORM,CAREFULLYTEAR IT OUT, FOLD IT AND DROP IT IN THE MAIL!

SOMETHING WRONG WITH THIS PUBLICATION?

FROM: (PRINT YOUR UNIT'S COMPLETE ADDRESS)

DATE SENT

PUBLICATION NUMBER	PUBLICATION DATE	PUBLICATION TITLE
TM 10-4930-246-13&P	7 FEB 1995	Operator's Unit, & Direct Support Maint. Incl. RPSTL for D-1 Nozzle

BE EXACT PIN-POINT WHERE IT IS

PAGE NO	PARA-GRAPH	FIGURE NO	TABLE NO

IN THIS SPACE, TELL WHAT IS WRONG AND WHAT SHOULD BE DONE ABOUT IT:

PRINTED NAME, GRADE OR TITLE, AND TELEPHONE NUMBER

SIGN HERE

DA FORM 1 JUL 79 2028-2

PREVIOUS EDITIONS ARE OBSOLETE.

DRSTS-M verprint2, 1 Nov 80

P.S.- - IF YOUR OUTFIT WANTS TO KNOW ABOUT YOUR RECOMMENDATION, MAKE A CARBON COPY OF THIS AND GIVE TO YOUR HEADQUARTERS.

REVERSE OF DA FORM 2028-2 AMSMC OP-103-85

FILL IN YOUR UNIT'S ADDRESS

FOLD BACK

DEPARTMENT OF THE ARMY

OFFICAL BUSINESS

NO POSTAGE NECESSARY IF MAILED IN THE UNITED STATES

BUSINESS REPLY MAIL

FIRST CLASS BRM PERMIT NO. 82 ROCK ISLAND, IL

POSTAGE WILL BE PAID BY ROCK ISLAND ARSENAL

Director
Armament and Chemical Acquisition
and Logistics Activity
ATTN: AMSTA-AC-NML
ROCK ISLAND, IL 61201-9948

TEAR ALONG PERFORATED LINE

RECOMMENDED CHANGES TO EQUIPMENT TECHNICAL PUBLICATIONS

SOMETHING WRONG WITH THIS PUBLICATION?

FROM: (PRINT YOUR UNIT'S COMPLETE ADDRESS)

DATE SENT

PUBLICATION NUMBER	PUBLICATION DATE	PUBLICATION TITLE
TM 10-4930-246-13&P	7 FEB 1995	Operator's Unit, & Direct Support Maint. Incl. RPSTL for D-1 Nozzle

BE EXACT PIN-POINT WHERE IT IS

PAGE NO	PARA-GRAPH	FIGURE NO	TABLE NO

IN THIS SPACE, TELL WHAT IS WRONG AND WHAT SHOULD BE DONE ABOUT IT:

PRINTED NAME, GRADE OR TITLE, AND TELEPHONE NUMBER

SIGN HERE

DA FORM 1 JUL 79 2028-2

PREVIOUS EDITIONS ARE OBSOLETE.

DRSTS-M verprint2, 1 Nov 80

P.S.- - IF YOUR OUTFIT WANTS TO KNOW ABOUT YOUR RECOMMENDATION, MAKE A CARBON COPY OF THIS AND GIVE TO YOUR HEADQUARTERS.

REVERSE OF DA FORM 2028-2 AMSMC OP-103-85

FILL IN YOUR UNIT'S ADDRESS

FOLD BACK

DEPARTMENT OF THE ARMY

OFFICAL BUSINESS

NO POSTAGE NECESSARY IF MAILED IN THE UNITED STATES

BUSINESS REPLY MAIL

FIRST CLASS BRM PERMIT NO. 82 ROCK ISLAND, IL

POSTAGE WILL BE PAID BY ROCK ISLAND ARSENAL

Director
Armament and Chemical Acquisition
and Logistics Activity
ATTN: AMSTA-AC-NML
ROCK ISLAND, IL 61201-9948

TEAR ALONG PERFORATED LINE

The Metric System and Equivalents

Linear Measure

1 centimeter = 10 millimeters = .39 inch
1 decimeter = 10 centimeters = 3.94 inches
1 meter = 10 decimeters = 39.37 inches
1 dekameter = 10 meters = 32.8 feet
1 hectometer = 10 dekameters = 328.08 feet
1 kilometer = 10 hectometers = 3,280.8 feet

Weights

1 centigram = 10 milligrams = .15 grain
1 decigram = 10 centigrams = 1.54 grains
1 gram = 10 decigram = .035 ounce
1 dekagram = 10 grams = .35 ounce
1 hectogram = 10 dekagrams = 3.52 ounces
1 kilogram = 10 hectograms = 2.2 pounds
1 quintal = 100 kilograms = 220.46 pounds
1 metric ton = 10 quintals = 1.1 short tons

Liquid Measure

1 centiliter = 10 milliters = .34 fl. ounce
1 deciliter = 10 centiliters = 3.38 fl. ounces
1 liter = 10 deciliters = 33.81 fl. ounces
1 dekaliter = 10 liters = 2.64 gallons
1 hectoliter = 10 dekaliters = 26.42 gallons
1 kiloliter = 10 hectoliters = 264.18 gallons

Square Measure

1 sq. centimeter = 100 sq. millimeters = .155 sq. inch
1 sq. decimeter = 100 sq. centimeters = 15.5 sq. inches
1 sq. meter (centare) = 100 sq. decimeters = 10.76 sq. feet
1 sq. dekameter (are) = 100 sq. meters = 1,076.4 sq. feet
1 sq. hectometer (hectare) = 100 sq. dekameters = 2.47 acres
1 sq. kilometer = 100 sq. hectometers = .386 sq. mile

Cubic Measure

1 cu. centimeter = 1000 cu. millimeters = .06 cu. inch
1 cu. decimeter = 1000 cu. centimeters = 61.02 cu. inches
1 cu. meter = 1000 cu. decimeters = 35.31 cu. feet

Approximate Conversion Factors

To change	*To*	*Multiply by*
inches	centimeters	2.540
feet	meters	.305
yards	meters	.914
miles	kilometers	1.609
square inches	square centimeters	6.451
square feet	square meters	.093
square yards	square meters	.836
square miles	square kilometers	2.590
acres	square hectometers	.405
cubic feet	cubic meters	.028
cubic yards	cubic meters	.765
fluid ounces	milliliters	29,573
pints	liters	.473
quarts	liters	.946
gallons	liters	3.785
ounces	grams	28.349
pounds	kilograms	.454
short tons	metric tons	.907
pound-feet	newton-meters	1.356
pound-inches	newton-meters	.11296

To change	*To*	*Multiply by*
ounce-inches	newton-meters	.007062
centimeters	inches	.394
meters	feet	3.280
meters	yards	1.094
kilometers	miles	.621
square centimeters	square inches	.155
square meters	square feet	10.764
square meters	square yards	1.196
square kilometers	square miles	.386
square hectometers	acres	2.471
cubic meters	cubic feet	35.315
cubic meters	cubic yards	1.308
milliliters	fluid ounces	.034
liters	pints	2.113
liters	quarts	1.057
liters	gallons	.264
grams	ounces	.035
kilograms	pounds	2.205
metric tons	short tons	1.102

Temperature (Exact)

°F	Fahrenheit temperature	5/9 (after subtracting 32)	Celsius temperature	°C

This fine document...

Was brought to you by me:

Liberated Manuals -- free army and government manuals

Why do I do it? I am tired of sleazy CD-ROM sellers, who take publicly available information, slap “watermarks” and other junk on it, and sell it. Those masters of search engine manipulation make sure that their sites that sell free information, come up first in search engines. They did not create it... They did not even scan it... Why should they get your money? Why are not letting you give those free manuals to your friends?

I am setting this document FREE. This document was made by the US Government and is NOT protected by Copyright. Feel free to share, republish, sell and so on.

I am not asking you for donations, fees or handouts. If you can, please provide a link to liberatedmanuals.com, so that free manuals come up first in search engines:

<A HREF=http://www.liberatedmanuals.com/>Free Military and Government Manuals</A>

- Sincerely
  Igor Chudov
  http://igor.chudov.com/
- Chicago Machinery Movers