TECHNICAL MANUAL

OPERATOR'S MANUAL

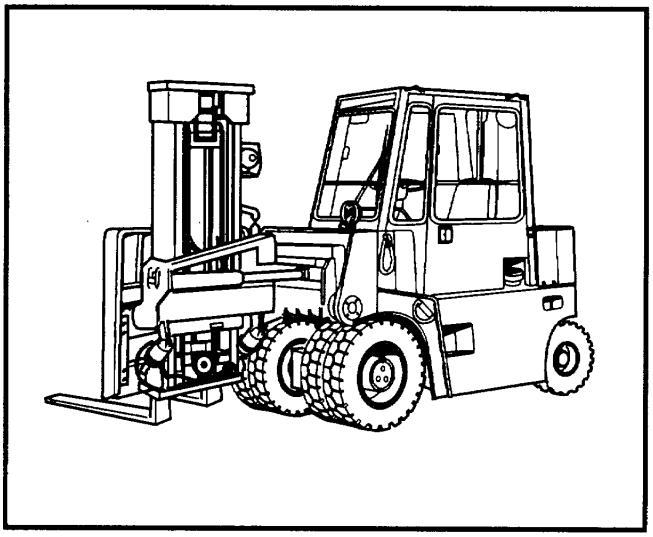

TRUCK, LIFT, FORK, CLEAN BURN DIESEL, FRONT/SIDE LOADING 6,000 LB CAPACITY MODEL R60SL-DC NSN 3930-01-378-7497

Approved for public release; distribution is unlimited.

HEADQUARTERS, DEPARTMENT OF THE ARMY

JANUARY 1997

TECHNICAL MANUAL

No. 10-3930-669-10

HEADQUARTERS
DEPARTMENT OF THE ARMY
Washington, DC, *21 JANUARY 1997*

OPERATOR'S MANUAL

TRUCK, LIFT, FORK, CLEAN BURN DIESEL, FRONT/SIDE LOADING, 6,000 LB CAPACITY

MODEL R60SL-DC

NSN 3930-01-378-7497

Approved for public release; distribution is unlimited.

REPORTING OF ERRORS AND RECOMMENDING IMPROVEMENTS

You can help improve this manual. If you find any mistakes or if you know of a way to improve the procedures, please let us know. Mail your letter, DA Form 2028 (Recommended Changes to Publications and Blank Forms), or DA Form 2028-2 located in the back of this manual direct to: Commander, US Army Tank-automotive and Armaments Command, ATTN: AMSTA-IM-OPIT, Warren, MI 48397-5000. A reply will be furnished to you. You may also provide DA Form 2028-2 information to TACOM via datafax or e-mail. TACOM's datafax number for AMSTA-IM-OPIT is (810) 574-6323 and the e-mail address is: amsta-im-opit@ cc.tacom-tech-pubs cc.tacom.army.mil.

TABLE OF CONTENTS

TABLE OF CONTENTS (CONT)

HOW TO USE THIS MANUAL

This manual is designed to help operate and maintain the forklift (NSN 3930-01-378-7497). Listed below are some of the special features that have been included to help locate and use the needed information.

A front cover Table of Contents is provided for quick reference to chapters and sections that will be used often.

Warning, caution, and note headings, subject headings, and certain other essential information are printed in bold type to make them easier to see.

The maintenance tasks describe what must be done to the forklift before starting the task and what must be done to return the forklift to operating condition after the task is finished.

The appendices are located at the end of the manual. They contain a reference guide to other manuals, guidelines to reading the Maintenance Allocation Chart (MAC), a list of expendable supplies and materials, and other material for maintaining the forklift. See TM 10-3930-669-20 for the Maintenance Allocation Chart.

In addition to text, there are exploded-view illustrations showing you how to take the part off and put it on. Cleaning and inspection procedures are also included, when required.

Chapters 1 and 2 of this manual are directed at the crew/operator of the forklift. These chapters include an overall description of the forklift and discuss the controls and indicators, their location and use, and the instructions for operation of the forklift under different circumstances.

Chapter 3 of this manual covers crew/operator lubrication, preventive maintenance checks and services, and basic troubleshooting. Crew/operator maintenance is also covered in this chapter.

FOLLOW THESE GUIDELINES WHEN USING THIS MANUAL

The operator must read through this manual and become familiar with the contents before attempting to operate the forklift.

Read all WARNINGS and CAUTIONS before performing any procedure.

The equipment conditions found in the maintenance procedures are of a general nature and the mechanic may be able to perform only certain tasks within a procedure to accomplish the equipment condition.

CHAPTER 1

INTRODUCTION

Section I. GENERAL INFORMATION

1-1. SCOPE.

a. Type of Manual. This manual is used for operation and maintenance of the Truck, Lift, Fork, Clean Burn Diesel, Front/Side Loading, 6,000 lb Capacity.

b. Model Number and Equipment Name. Truck, Lift, Fork, Clean Burn Diesel, Front/Side Loading, 6,000 lb Capacity, NSN 3930-01-378-7497, produced by Drexel Industries, Model R60SL-DC.

c. Purpose of Equipment. The Truck, Lift, Fork, hereinafter referred to as the forklift, is designed to load and unload properly stored material in an ammunition igloo or bunker.

1-2. MAINTENANCE FORMS AND RECORDS.

Department of the Army forms and procedures used for equipment maintenance will be those prescribed by DA PAM 738-750, The Army Maintenance Management System (TAMMS) (Maintenance Management UPDATE).

1-3. CORROSION PREVENTION AND CONTROL (CPC).

Corrosion Prevention and Control (CPC) of Army materials is a continuing concern. It is important that any corrosion problems with the forklift be reported so that the problem can be corrected and improvements can be made to prevent the problem in the future.

While corrosion is typically associated with rusting of metals, corrosion can also include deterioration of other materials, such as rubber and plastic. Unusual cracking, softening, swilling, or breaking of these materials may be a corrosion problem.

If a corrosion problem is identified, it can be reported using Standard Form 368, Product Quality Deficiency Report. Use of key words such as "corrosion, rust, deterioration, and cracking" will ensure that the information is identified as a CPC problem.

The form should be submitted to the address specified in DA PAM 738-750.

1-4. DESTRUCTION OF ARMY MATERIAL TO PREVENT ENEMY USE.

Command decision, according to the tactical situation, will determine when the destruction of the forklift will be accomplished. A destruction plan will be prepared by the using organization unless one has been prepared by a higher authority. For general destruction procedures for this equipment, refer to TM 750-244-6, Procedures for Destruction of Tank-Automotive Equipment to Prevent Enemy Use (US Army Tank-automotive and Armaments Command).

1-5. REPORTING EQUIPMENT IMPROVEMENT RECOMMENDATIONS (EIR).

If your 6,000 lb forklift needs improvement, let us know. Send us an EIR. You, the user, are the only one who can tell us what you don't like about your equipment. Let us know why you don't like the design or performance. Put it on a SF368 (Product Quality Deficiency Report). Mail it to Commander, US Army Tank-automotive and Armaments Command, ATTN: AMSTA-TR-E/MPA, Warren, MI 48397-5000. A reply will be furnished to you.

1-6. WARRANTY INFORMATION.

The warranty starts on the date found in block 23, DA Form 2408-9 in the logbook. Report all defects in material and workmanship to your supervisor, who will take the appropriate action. Warranty information is listed in Appendix A.

1-7. NOMENCLATURE CROSS-REFERENCE LIST.

Common List	Official Nomenclature
Forklift	Truck, Lift, Fork, Clean Burn Diesel, Front/Side Loading, 6,000 lb Capacity, NSN 3930-01-378-7497, Model R60SL-DC

1-8. LIST OF ABBREVIATIONS

Corrosion Prevention and Control	(CPC)
Reporting Equipment Improvement Recommendations	(EIR)
The Army Maintenance Management System	(TAMMS)
Milliliter	(mm)
Mile Per Hour	(mph)
Kilometer Per Hour	(kph)
kilogram	(kg)
Kilowatt	(kw)
Horsepower	(hp)
Pound	(lb)
Feet Per Minute	(fpm)
Rotation Per Minute	(rpm)
Kilopascale	(kPa)
Gallons Per Minute	(gpm)
Pounds per Squire Inch	(psi)
Preventive Maintenance Checks and Services	(PMCS)
Nuclear, Biological, and Chemical	(NBC)

Section II. EQUIPMENT DESCRIPTION

1-9. EQUIPMENT CHARACTERISTICS, CAPABILITIES, AND FEATURES.

CHARACTERISTICS

a. Forklift operates as a conventional, counterbalanced, front-loading forklift.

b. Forklift is fully operational in storage aisles as narrow as 66 inches (1,676 mm).

c. The mast assembly shift and pivot features simulate the right angle turning of a conventional, frontloading forklift in a wide storage aisle.

d. When the mast assembly is pivoted out 90 degrees and shifted to the right, the forklift operates as a side loader.

e. The forklift is 'heavier than conventional forklifts of similar size.

f. The forklift is designed for operation on hard surfaces.

CAPABILITIES AND FEATURES

a. Maximum Load: 6,000 lb (2,722 kg)

b. Maximum speed with maximum load evenly distributed: 10 mph (16 kph)

1-10. LOCATION AND DESCRIPTION OF MAJOR COMPONENTS.

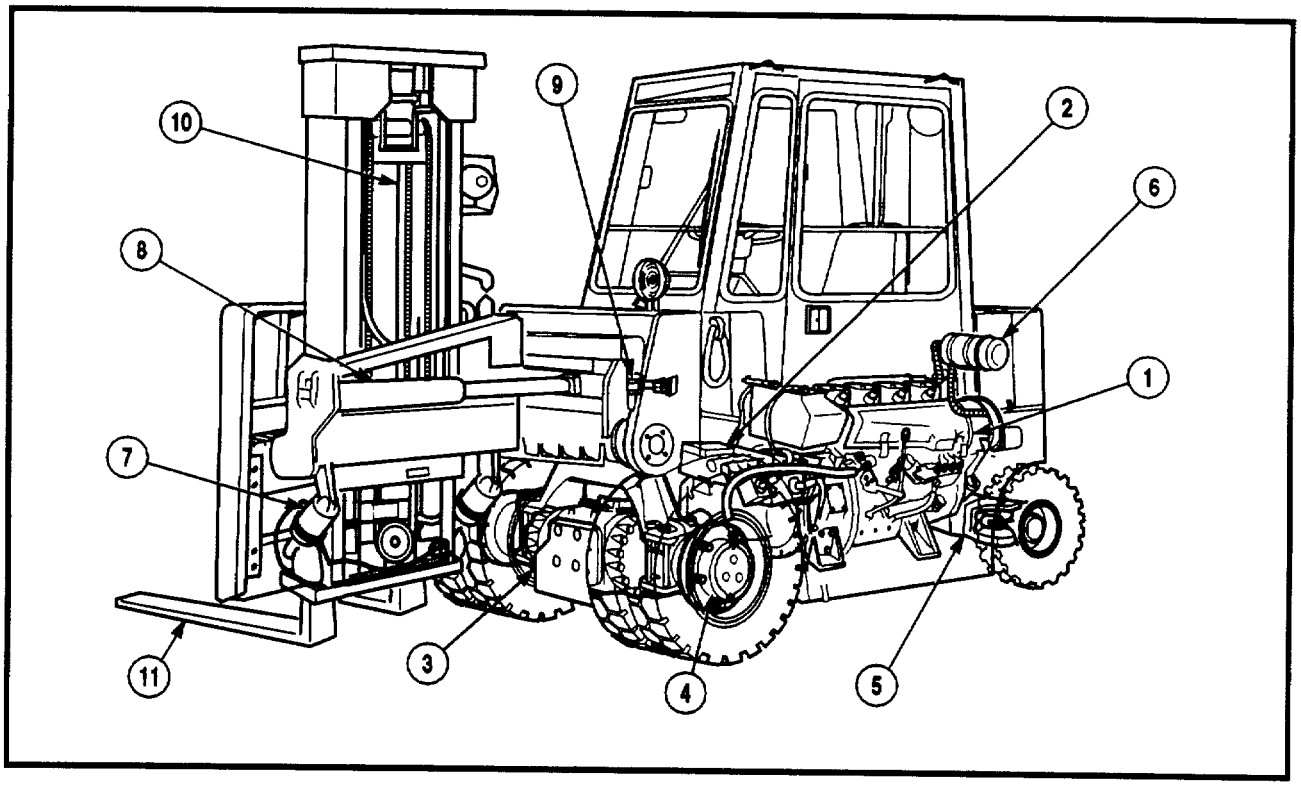

1. **Engine**. Air-cooled diesel engine rated at 60 hp (44 kilowatt).

2. **Transmission**. Transmission is a two-speed range, forward and reverse shifting unit. Power is transmitted by constant-mesh helical gears and multiple-disc clutch packs.

3. **Front Axle**. Front axle powers the front wheels driving the vehicle.

4. **Wheel Ends (Planetary).** Planetary wheel ends increase the power at the front wheels by increasing final gear ratio.

5. **Steer Axle.** Steer axle provides vehicle steering capabilities at the rear of the vehicle.

6. **Air Cleaner.** Dry type air cleaner prevents dust and debris from entering the air induction system.

7. **Tilt Cylinder**. Tilt cylinder allows the mast assembly to tilt forward and back.

8. **Pivot Cylinder.** Pivot cylinder allows the mast assembly to swing right.

9. **Shift Cylinder**. Shift cylinder allows the mast assembly to shift right and left.

10. **Lift Cylinder**. Lift cylinder raises and lowers forks.

11. **Lift Forks**. Lift forks provide surface upon which the load is placed.

1-11. EQUIPMENT DATA.

Table 1-1 is a list of equipment data for the forklift.

Table 1-1. Equipment Data

Type of Vehicle	6K Forklift Truck
Manufacturer	Drexel Industries, Inc.
Model Number	R60SL-DC
Truck Capacity	6,000 lb (2727 kg) 24-inch load center
Weight (dry)	20,200 pounds (9,235 kg)
Overall Length	
With Forks	164 inches (4,166 mm)
Without Forks	122 inches (3099 mm)
Overall Width	54 inches (1,372 mm)
Height (Top of Cab)	91 inches (2,311 mm)
Minimum Lift Height	144 inches (3,658 mm)
Collapsed Mast Height	92 inches (2,337 mm)
Ground Clearance (Minimum)	
Under Mast	8 inches (203 mm)
Under Truck	5 inches (127 mm)
Brakes	
Service	2-wheel disc
Parking	Disc on drive axle
Minimum Gradeability	
With Load	20%
Without Load	20%
Drawbar Pull (Minimum)	
With Load	5200 Pounds-force (23,131 N)
Without Load	4800 Pounds-force (21,351 N)
Travel Speed	
With Load	10 mph (16 km)
Without Load	10 mph (16 km)
Turning Radius	106 inches (2,692 mm)
Wheels	
Type	Solid pneumatic
Size (front)	7.50 x 15, Dual ply
Size (rear)	6.50 x 10, Single ply
Drift	
Lift Cylinders	Should not exceed 2 inches (51 mm) in a 10-minute period
Tilt Cylinders	Should not exceed 1 degree in a 10-minute period
Upright Speed (Minimum)	
Lifting - With Load	60 fpm (0.305 m/s)
Lifting - Without Load	60 fpm (0.305 m/s)
Lowering - With Load	80 fpm (0.406 m/s)
Lowering - Without Load	40 fpm (0.203 m/s)
Pivot & Shift	
Reach	2 inches (50 mm)
Sideshift	21 inches (533 mm)

Table 1-1. Equipment Data - CONT.

Engine Specifications	
Manufacturer	KHD Deutz
Type	Diesel
Model	F4L912W
Weight (dry)	595 lbs (270 kg)
Number of cylinders	4
Bore (inch)	3-15/16 inch (100 mm)
Stroke (inch)	4-18/25 inch (120 mm)
Piston displacement (entire inch)	230 cubic inch (3,769 cm3)
Direction of rotation (facing flywheel)	Counterclockwise
Working principle	Four-stroke diesel with direct injection
Firing order	1-3-4-2
Compression ratio	19:1
Power output	60 hp (44 kilowatt) at 2,500 RPM
Fuel	Diesel or JP-8
Lubrication system	Forced lubrication
Oil pressure	30 to 60 psi (207-414 kPa)
Speed	
Governed Speed (no load)	2,500 RPM
Engine idle	650 RPM
Transmission Specifications	
Manufacturer	Borg Warner
Type	Two-speed semi-automatic
Model	PR-2
Speed Range	Two forward and reverse
Weight (dry)	330 lbs (150 kg)
Drive Belt	
Type	V-belt
Deflection (maximum)	0.4 (10 mm)
System Voltage	24-volt, negative ground
Alternator	24-volt, 50 amp
Batteries	
Type	BCI Group Size 24, Maintenance Free
Cold crank current	550 amps at 0°F (-18C)
Reserve capacity	142 amps min. at 80°F (26.7°C)
Starter	5.5 kw
Hydraulic System	
Filter size	10 micron
Main valve relief pressure	2,600 psi (17,926 kPa), non-adjustable
Main pump pressure	4 gpm (15 /min) 2,600 psi (17,926 kPa)
	2,500 rpm operating temperature
Steer pump pressure	11 gpm (43 /min) 2,000 psi (13,790 kPa)
Relief valve setting	2,600 psi (17,926 kPa)
Capacities	
Engine Crankcase	
Without filter	8.5 quarts (8 liters)
With filter	10 quarts (9.5 1)
Fuel Tank	15 gallons (57 liters)
Hydraulic Reservoir	10.8 gallons (40.8 liters)
Drive Axle	6 quarts (5.67 1)
Transmission	8 quarts (7.57 1)

Table 1-1. Equipment Data - CONT.

Master cylinder	75 quarts (0.7 1)
Drive Axle	
Manufacturer	Clark Hurth
Type	Drive shaft driven/Interplanetary
Model	172
Gear ratio	15.406:1
Weight (dry)	582 lbs (264 kg)
Steer Axle	
Weight	340 lbs (155 kg)

Section III. PRINCIPLES OF OPERATION

1-12. POWERTRAIN.

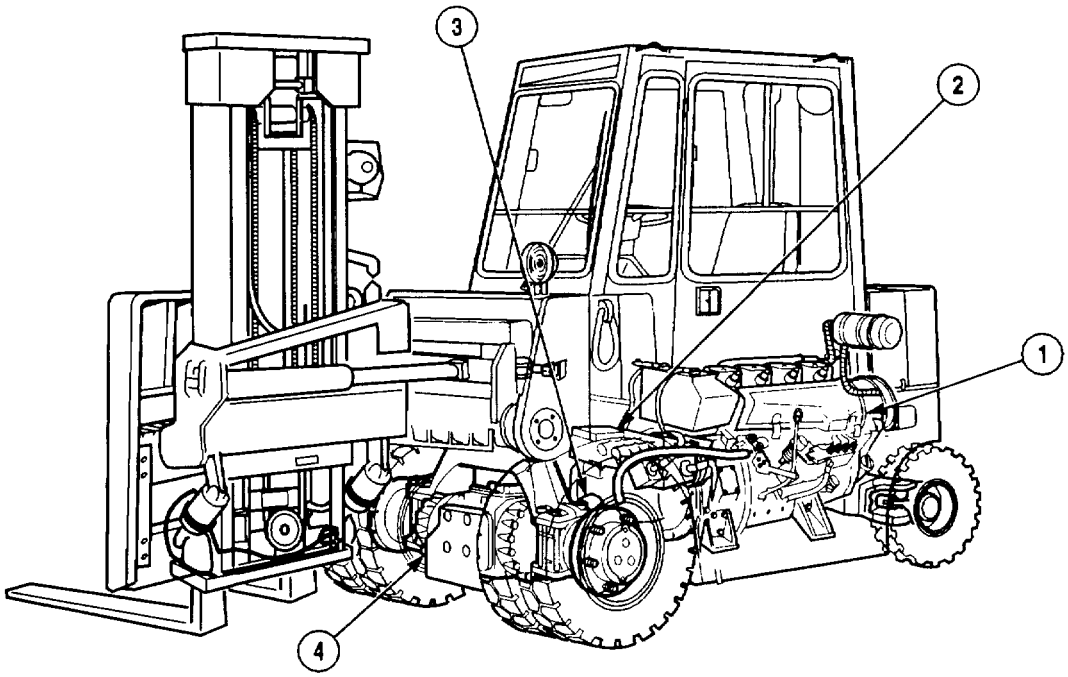

a. The powertrain consists of the engine (1), transmission (2), drive shaft (3), and drive axle (4).

b. The forklift is powered by an air-cooled, four-cylinder diesel engine coupled directly to an automatic transmission. The transmission can be shifted into forward, reverse, or neutral and has a high range and low range in forward only.

c. A short drive shaft transmits power from the transmission to the drive axle.

1-13. ELECTRICAL SYSTEM.

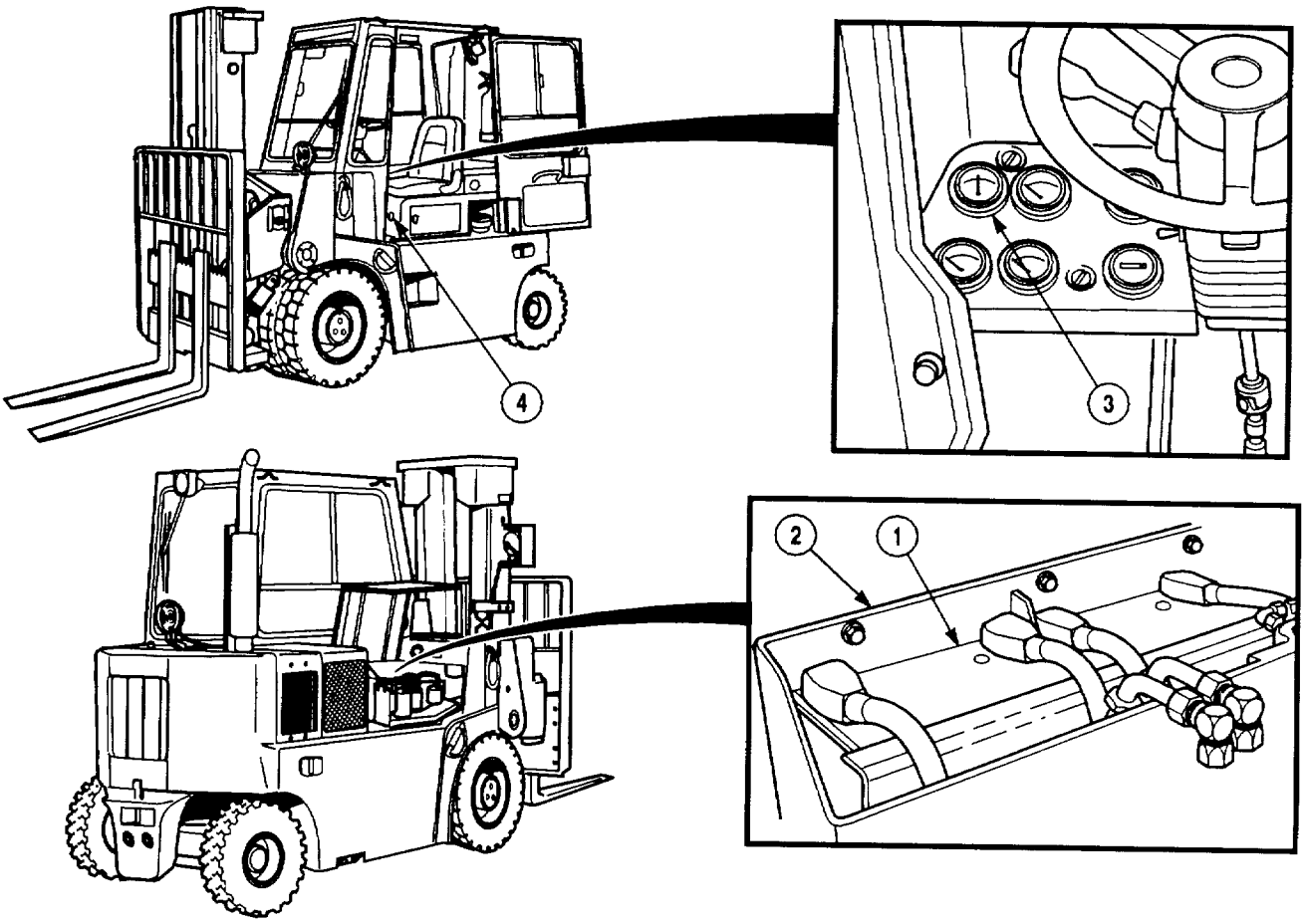

a. The forklift is equipped with a twenty-four volt, negative-ground, electrical system. The two top-post, twelve volt batteries (1) are under the engine cover on the RH side of the forklift and are mounted in a battery box (2). Actual amperage is indicated by the ammeter (3) on the instrument panel.

b. The MAIN POWER switch (4) disables all electrical circuits with the exception of the ammeter and the battery side of the starter solenoid. The ammeter will always indicate actual current draw from the batteries.

1-14. HYDRAULIC SYSTEM.

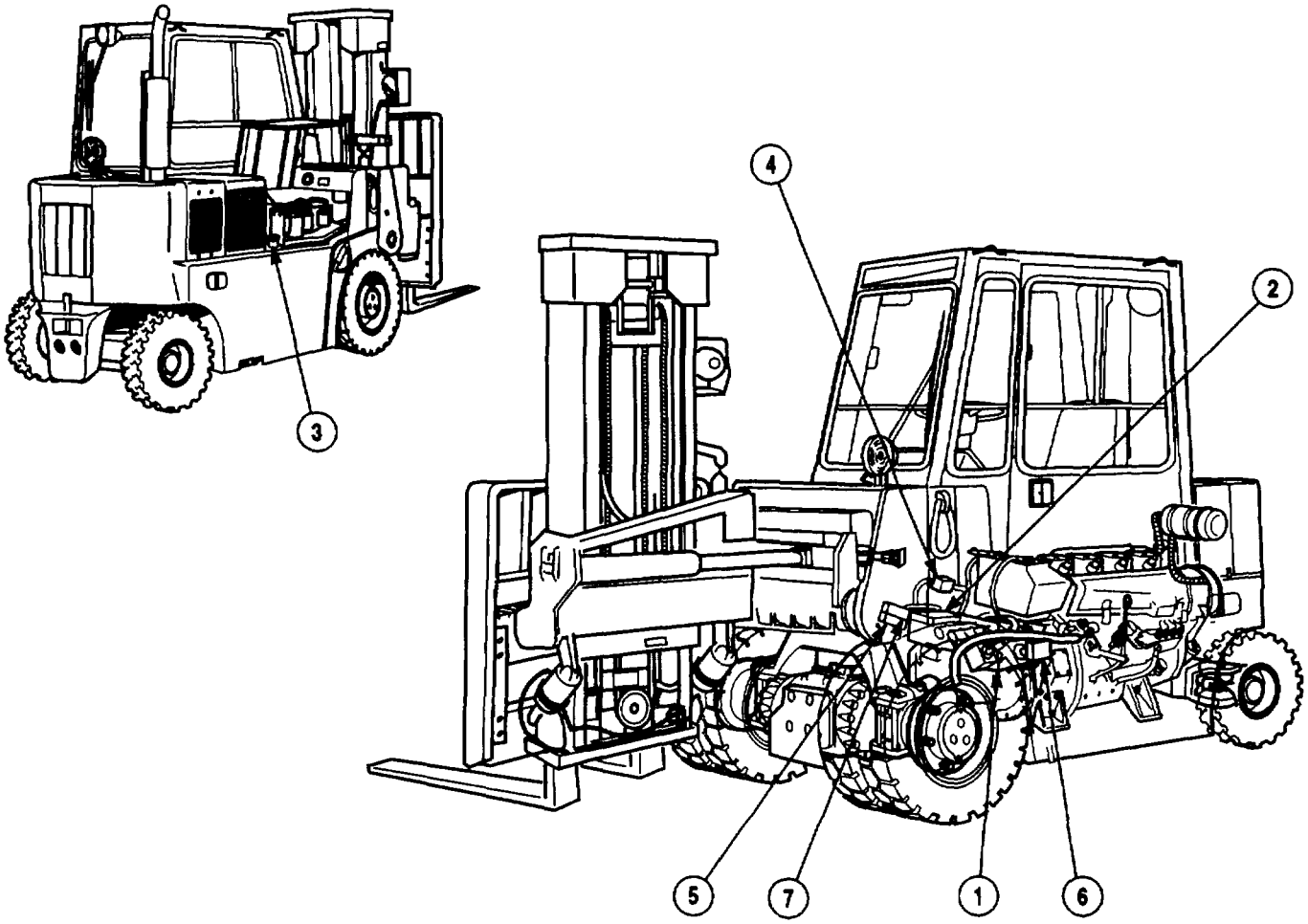

The hydraulic system is pressurized by a dual cartridge pump (1) which is driven by the transmission (2). The dual cartridge pump is suction fed from the hydraulic tank (3). The primary cartridge supplies 11 gallons-per-minute (GPM) to the load-sensing power steering unit (4) and the lift/shift control valve (5). A priority valve (6) directs the flow to either the steering unit or the lift/shift control valve. The secondary cartridge supplies 4 GPM to the pivot/tilt control valve (7).

1-15. STEERING SYSTEM.

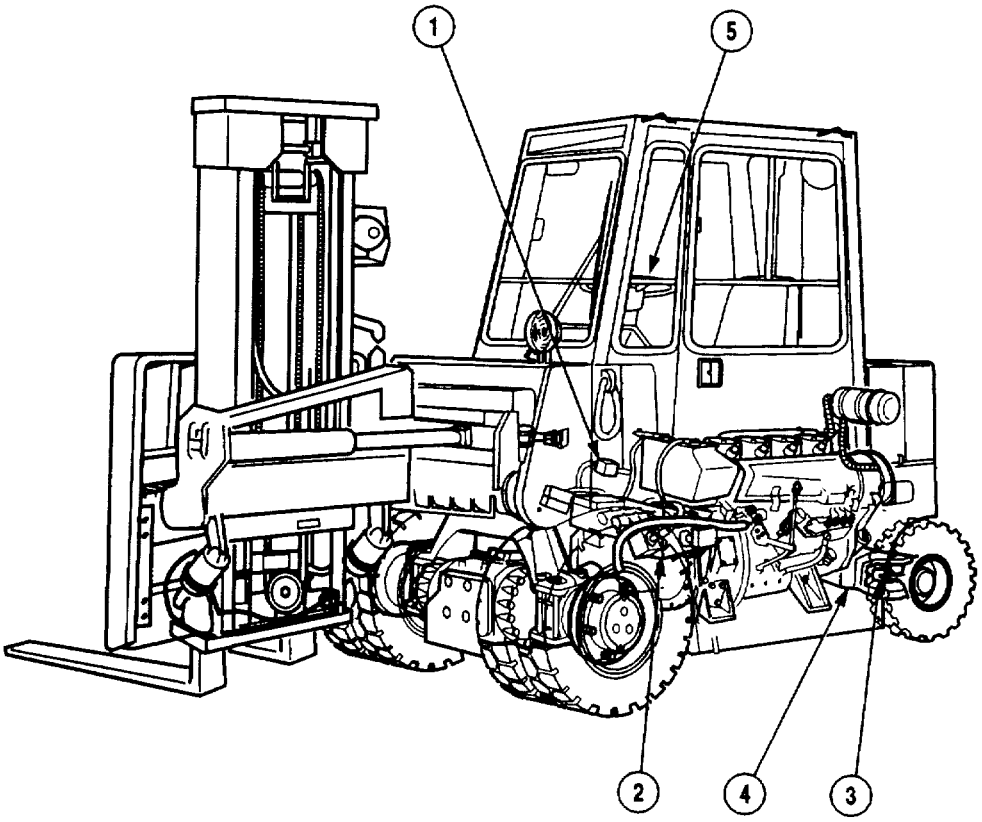

Steering is hydraulically controlled by the load-sensing power steering unit (1). The steering unit is powered by the dual cartridge hydraulic pump (2). The steering unit controls the steering cylinder (3), located on the steering axle (4), by turning the steering wheel (5).

1-16. MAST ASSEMBLY.

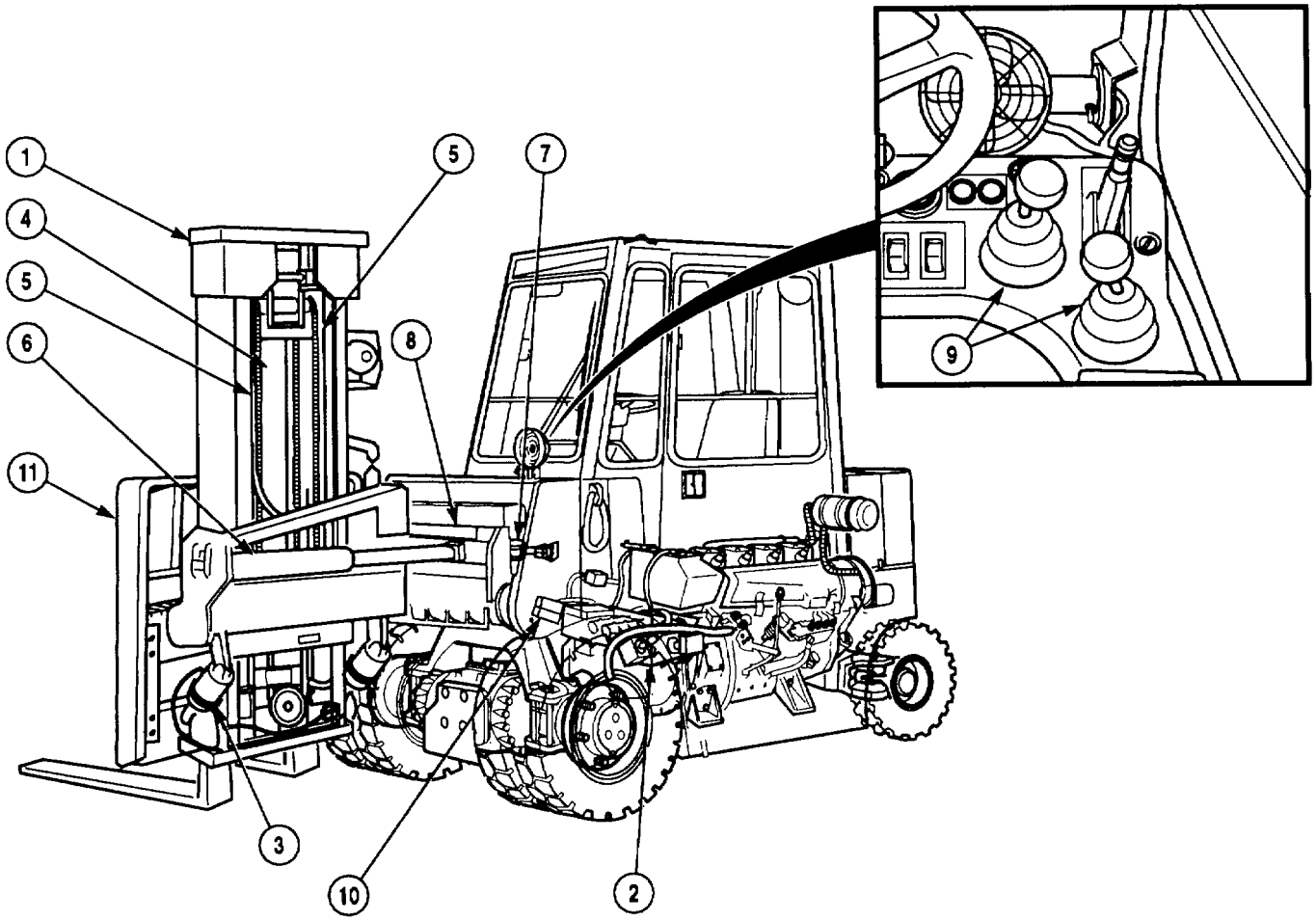

The mast (1) is operated hydraulically by seven cylinders. The seven cylinders are powered by the dual cartridge hydraulic pump (2). The two tilt cylinders (3) tilt the mast 3 degrees forward and 6 degrees reverse. The primary lift cylinder (4) and two secondary lift cylinders (5) raise the mast. The pivot cylinder (6) swings the mast open up to 90 degrees to the right only. The side shift cylinder (7) moves the carriage (8) left and right. The pivot and tilt function speeds are restricted by internal orifices to maintain safe operating speeds. All these functions are controlled by two joysticks (9) in the cab. The joysticks operate the spools in control valves (10). The backrest (11) provides stability for loads being transported.

1-17. BRAKE SYSTEM.

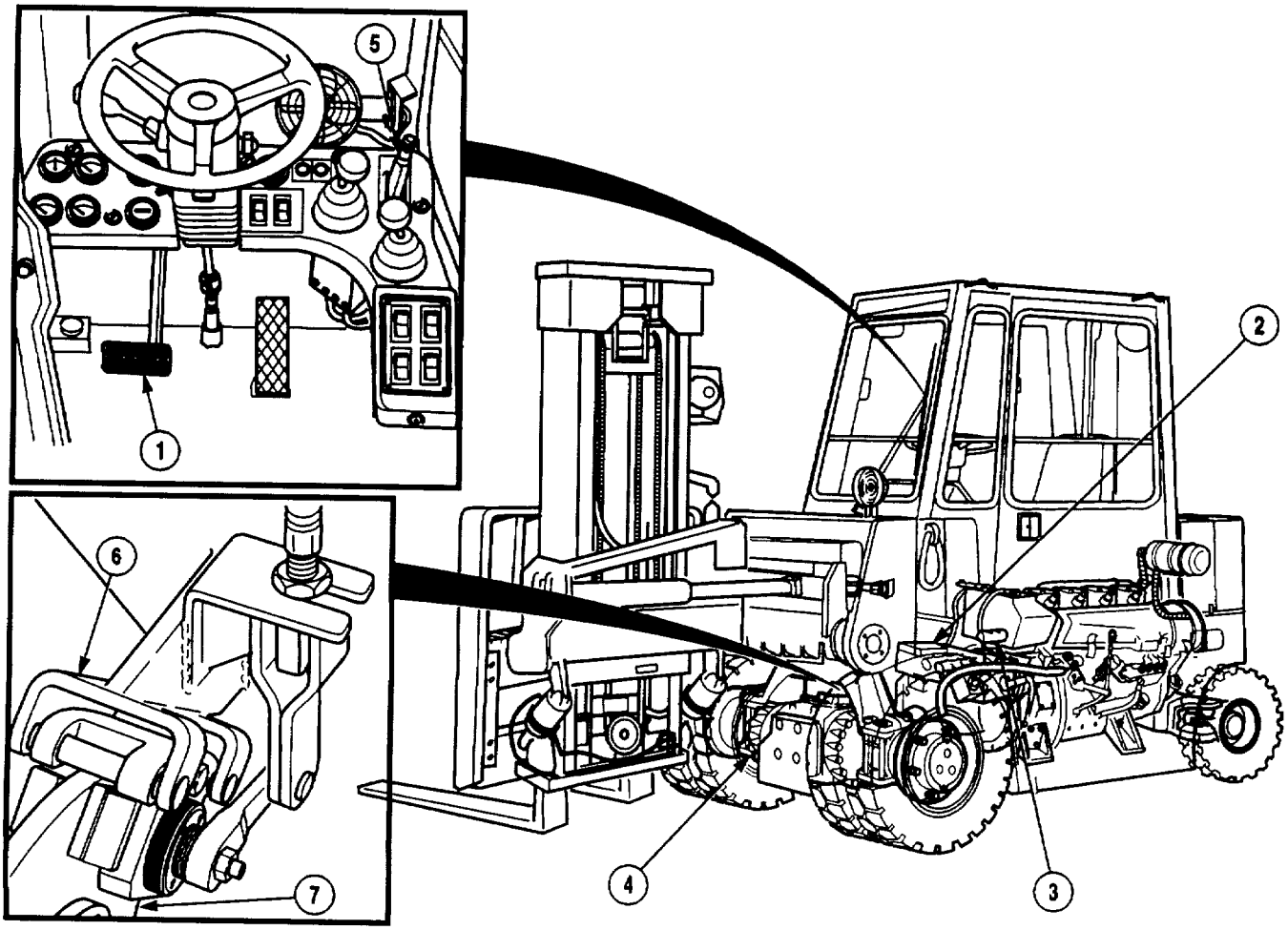

The brake pedal (1) stops forward and reverse movement. Light brake application activates the inching valve solenoid on the transmission (2), which slowly disengages the transmission. The full brake application pushes the brake linkage into the brake master cylinder (3), which drives fluid into the drive axle (4). The brake fluid inside the drive axle moves pistons against plates that contact the brake discs, and slow down the forklift. The parking brake (5) manually closes the brake caliper (6) on the parking brake rotor (7).

1-18. TIRES.

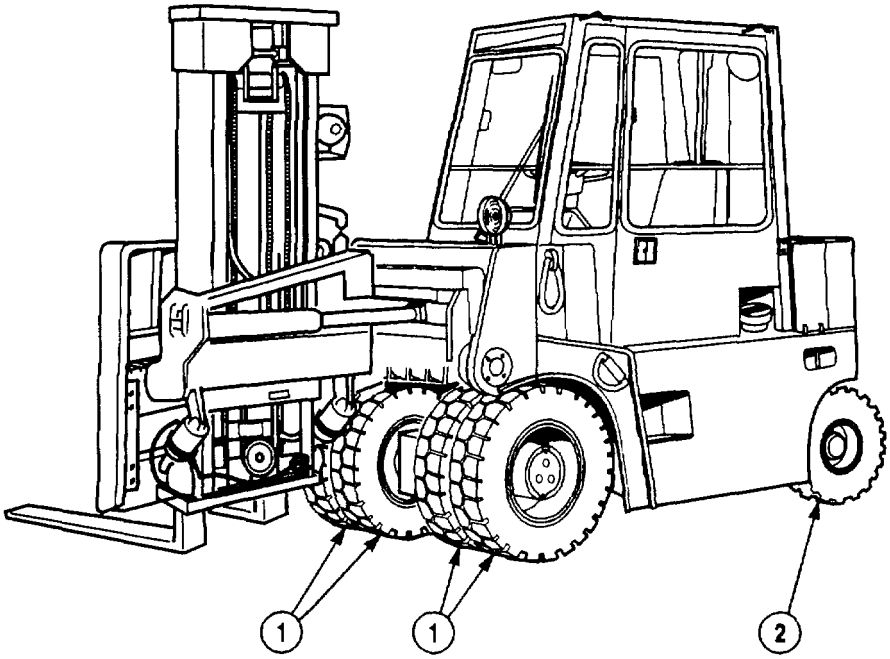

The forklift is equipped with six tires: four drive tires (1) and two steer tires (2). All tires are solid rubber, requiring no air.

CHAPTER 2

OPERATING INSTRUCTIONS

Section I. DESCRIPTION AND USE OF OPERATOR CONTROLS AND INSTRUMENTS

2-1. OPERATOR CONTROLS AND INDICATORS.

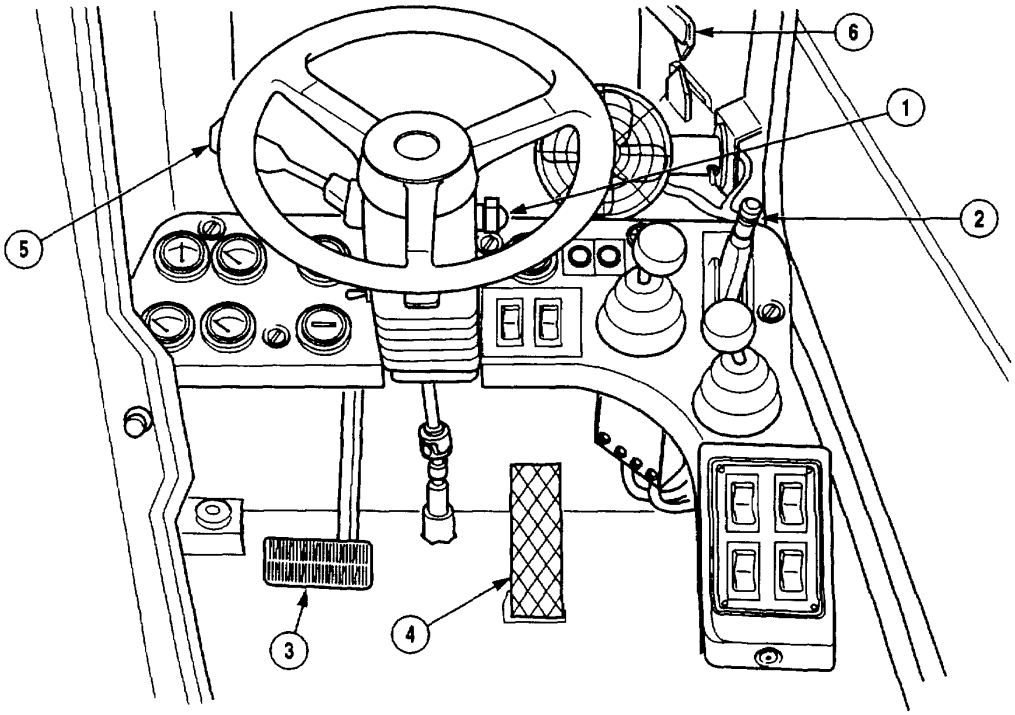

Table 2-1. Controls and Indicators

Key	Control/Indicator	Function
1	Engine Switch	Provides means of turning on electrical system and engaging starter.
2	Parking Brake	Manually controls parking brakes. The full up (vertical)position sets brakes and full down (horizontal) position releases brakes.
3	Brake Pedal	Stops forward and reverse movement of forklift.
4	Throttle Pedal	Controls engine speed. Push pedal down to increase engine speed. Release pedal to decrease engine speed.
5	Transmission Control Lever	Controls forward and reverse movement of forklift. Control ever has three positions: forward puts transmission in forward gear, center puts transmission in neutral, and back puts transmission in reverse.
6	Fork Level Position	Indicates the position of the mast assembly in the pivot out position. When the two Indicator points are aligned, this indicates that the mast is vertical and the forks are relatively level.

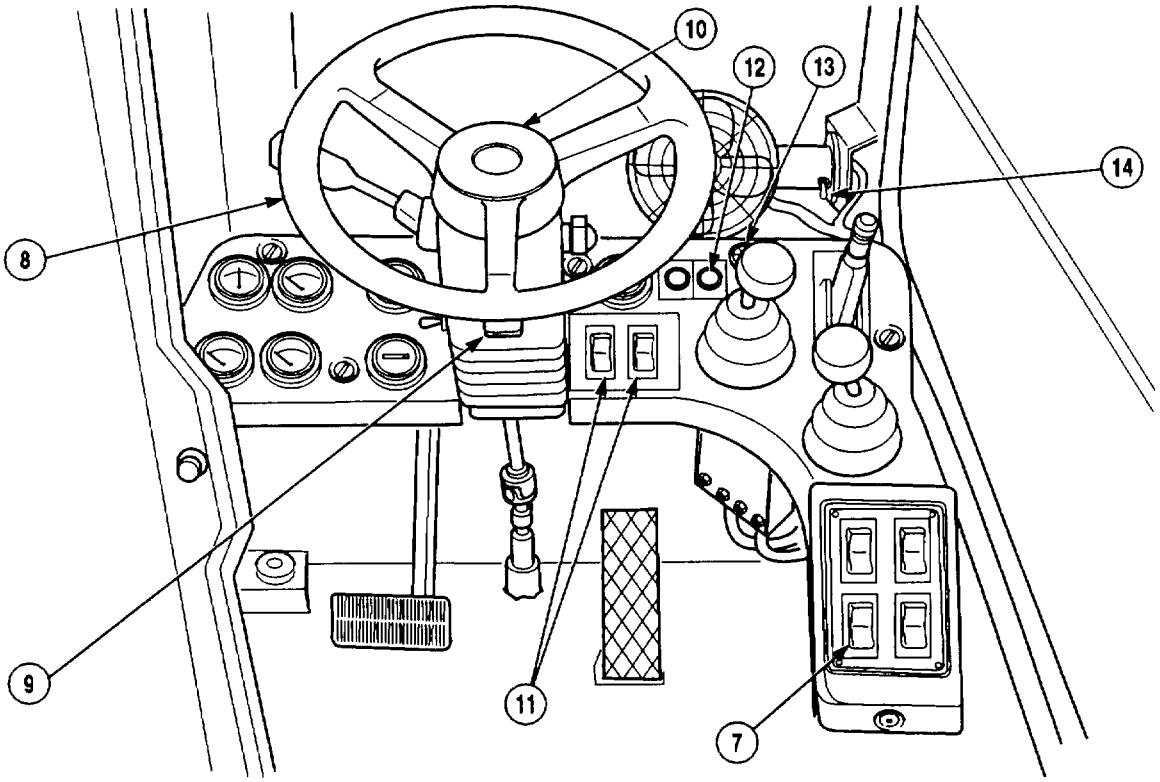

Table 2-1. Controls and Indicators - CONT.

Key	Control/indicator	Function
7	Transmission Speed Switch	Press switch to change transmission from low range to high range and from high range to low range. Indicator illuminates when transmission is engaged in high gear.
8	Steering Wheel	Turns rear wheels left and right.
9	Steering Wheel Tilt Tab	Releases lock to allow steering wheel to be tilted. Lift tab to adjust steering wheel forward or back.
10	Horn Button	Press to sound horn.
11	Front/Rear Light	Press left switch to top position to turn on front light, and center position to turn on gauge lights, mast light, and taillight. Press right switch to top position to turn on rear light.
12	Broken Belt Indicator	Illuminates when engine fan belt is broken while engine is running.
13	Broken Belt Warning Buzzer	Sounds when fan belt is broken while engine is running.
14	Fan Speed Switch	Controls fan speed. Two position switch. Push switch up for ON speed. Push switch down for OFF speed.

2-1. OPERATOR CONTROLS AND INDICATORS (CONT).

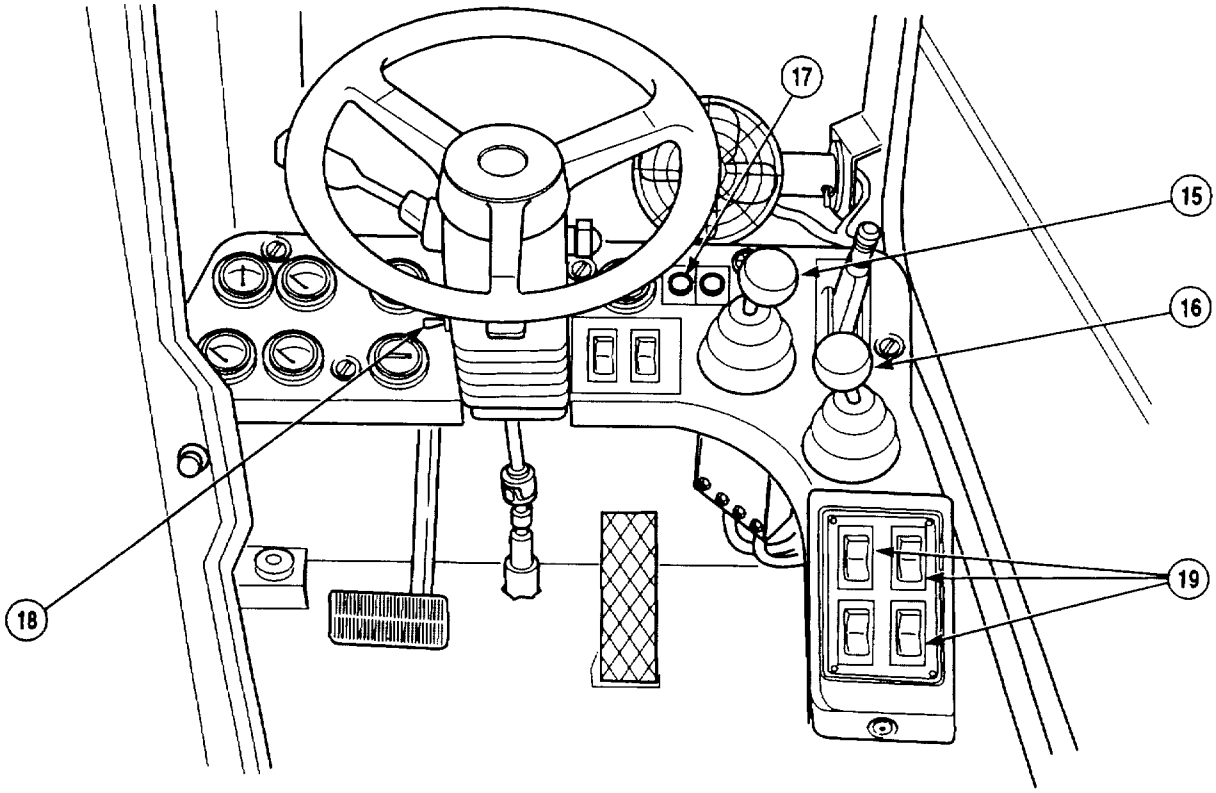

Table 2-1. Controls and Indicators - CONT.

Key	Control/Indicator	Function
15	Mast Assembly Lift/ Lower/Tilt Joystick	Controls raising, lowering, and tilting the mast assembly. Push lever forward to lower the mast assembly. Pull lever back to raise mast assembly. Pull lever left to tilt mast assembly back. Push lever right to tilt mast assembly forward.
16	Mast Assembly Pivot/ Shift Joystick	Controls side pivot and shift of mast assembly. Push lever forward to pivot mast assembly out. Pull lever back to close mast assembly. Push lever left to side shift mast assembly left. Push lever right to side shift mast assembly right.
17	Glow Plug Indicator	Illuminates to indicate power applied to the glow plugs.
18	Glow Plug Switch	Turns glow plugs on.
19	Front/Top/Rear Wiper Switches	Controls wiper speed. Three position switches. Push switch up for HIGH speed wiper action. Push switch down for LOW speed wiper action. Push to center to PARK wiper motor.

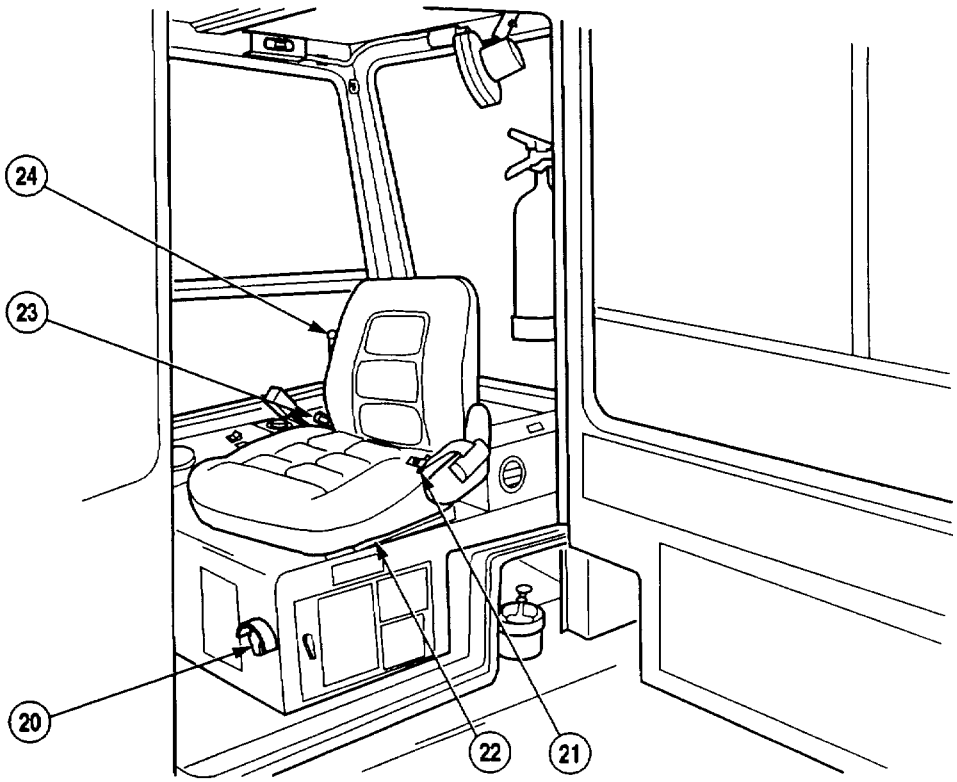

Table 2-1. Controls and Indicators - CONT.

Key	Control/Indicator	Function
20	Main Power Switch	Provides main power to the forklift electrical system.
21	Seat Belt	Provides for operator safety during operation of forklift.
22	Seat Slide Lever	Releases lock to allow operator's seat to be moved forward and back. Lift lever and slide seat to desired position.
23	Seat Back Tilt Knob	Adjusts tilt of operator's seat back. Turn knob clockwise to tilt seat back forward. Turn knob counterclockwise to adjust seat back backward.
24	Seat Tension Adjustment Lever	Adjusts tension of operator's seat. Lever has three adjustment positions. Lever in the upright position is for a light-build person. Lever in the center forward position is for a medium-build person. Lever in the downward position is for a heavy-build person.

2-1. OPERATOR CONTROLS AND INDICATORS (CONT).

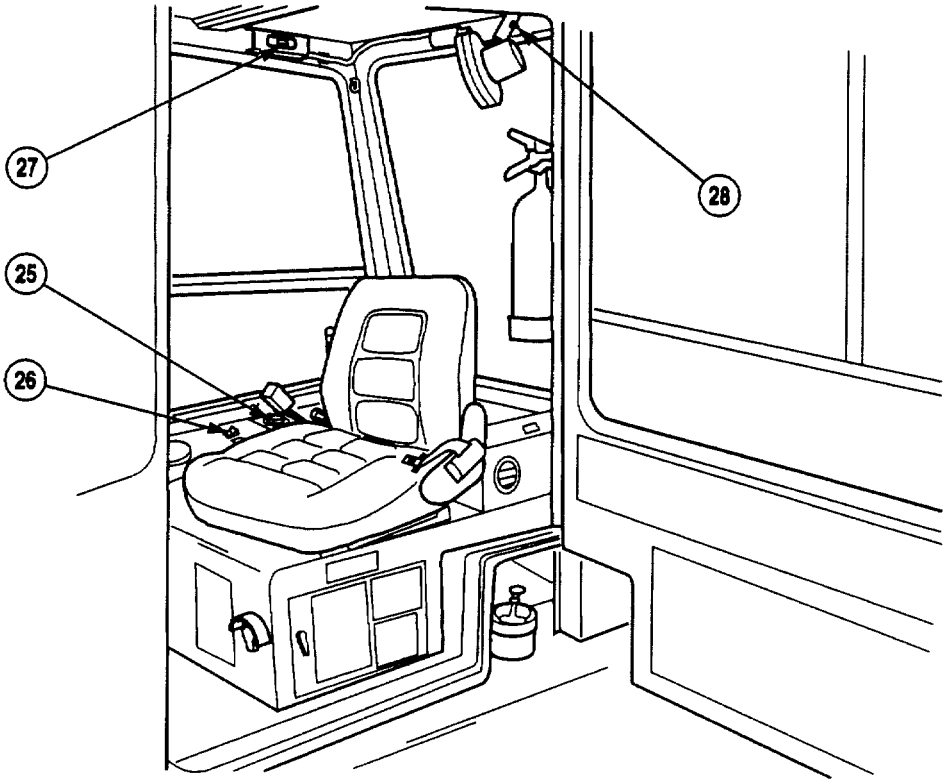

Table 2-1. Controls and Indicators - CONT.

Key	Control/Indicator	Function
25	Heater Temperature Control	Adjusts temperature of heat to the operator's compartment Turn dial clockwise to increase cab temperature. Turn dial counterclockwise to decrease cab temperature.
26	Heater Blower Switch	Controls heater blower. Three position switch. Push switch forward for OFF. Push switch back once for LOW speed. Push switch back twice for HIGH speed.
27	Cab Lights (2)	Illuminate operator's compartment.
28	Fan Speed Switch	Controls fan speed. Two position switch. Push switch forward for ON. Push switch back for OFF.

2-2. OPERATOR INSTRUMENTS.

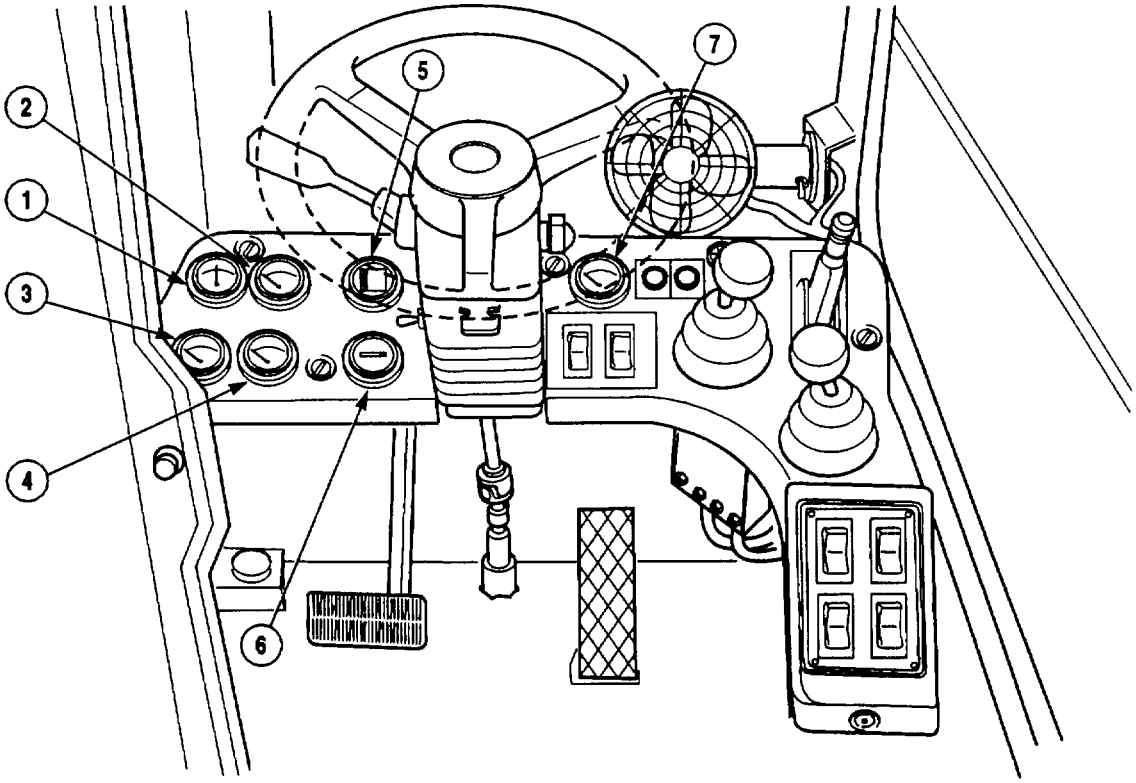

Table 2-2. Instruments

Key	Instrument	Function
1	Ammeter Gauge	Indicates amperage drawn on electrical system during operation.
2	Fuel Level Gauge	Indicates level of fuel in fuel tank.
3	Engine Oil Pressure Gauge	Indicates engine oil pressure in pounds-per-square inch (psi) and kilopascals (kPa).
4	Engine Temperature Gauge	Indicates engine temperature in degrees Fahrenheit and Celsius.
5	Air Restriction Indicator Gauge	Indicates condition of air filter in inches of Hg. Button is for resetting indicator.
6	Hour Meter	Indicates engine operating hours only.
7	Transmission Oil Temperature Gauge	Indicates transmission oil temperature in degrees Fahrenheit and Celsius.

Section II. PREVENTIVE MAINTENANCE CHECKS AND SERVICES (PMCS)

2-3. PMCS INTRODUCTORY MATERIAL.

This section contains PMCS instructions for the forklift. The PMCS table contains daily and weekly checks and services necessary to ensure that the forklift is ready for operation. Operator PMCS is limited to inspection and service tasks as they are listed in the Maintenance Allocation Chart (MAC). Operator maintenance is performed at the specified intervals listed on the PMCS table (Table 2-3). The operator performs these tasks before operating the forklift, during operation of the forklift, and after it is shut down.

a. Before PMCS Procedures. **Before** PMCS is performed daily and immediately before operating the forklift. Pay attention to WARNINGS, CAUTIONS, and NOTES.

b. **During PMCS Procedures. During** PMCS is performed daily while the forklift is in operation. Pay attention to WARNINGS, CAUTIONS, and NOTES.

c. After PMCS Procedures. **After** PMCS is performed daily and immediately after operating the forklift. Pay attention to WARNINGS, CAUTIONS, and NOTES.

d. Weekly PMCS Procedures. **Weekly** PMCS is performed once a week. Pay attention to WARNINGS, CAUTIONS, and NOTES.

e. Monthly PMCS Procedures. **Monthly** PMCS is performed once a month. Pay attention to WARNINGS, CAUTIONS, and NOTES.

f. Semi-Annual PMCS Procedures. **Semi-Annual** PMCS is performed every six months. Pay attention to WARNINGS, CAUTIONS, and NOTES.

g. Equipment Failure. Any equipment failures or operation problems should be recorded on the proper forms. These forms are a permanent record of services, repairs, and modifications made on the forklift. They are a checklist to know what was wrong with the forklift after its last use and whether those faults have been checked. Refer to DA Pam 738-750 for information on forms and records.

h. Always do your PMCS in the same order, so it gets to be a habit. Once you've had some practice, you will quickly spot anything wrong.

i. If something looks wrong and cannot be repaired immediately, enter it on the DA Form 2404 (Equipment Inspection and Maintenance Worksheet). If something seems seriously wrong, notify supervisor.

2-4. GENERAL PMCS PROCEDURES AND CONDITIONS.

The following paragraph describes general procedures and conditions that should be observed when performing PMCS. If any of the components being inspected during the PMCS procedures show any of the conditions described in this paragraph, report it on a DA Form 2404 (Equipment Inspection and Maintenance Worksheet) and notify supervisor.

WARNING

- **Drycleaning solvent (P-D-680) is TOXIC and flammable. Wear protective goggles and gloves and use only in well-ventilated area; avoid contact with skin, eyes, and clothes; and do not breathe vapors. Keep away from heat or flame. Never smoke when using solvent; the flashpoint for type I drycleaning solvent is 100°F (38°C) and for type II is 138°F (50°C). Failure to do so may result in injury or death to personnel.**

- **If personnel become dizzy while using cleaning solvent, immediately get fresh air and medical help. If solvent contacts skin or clothes, flush with cold water. If solvent contacts eyes, immediately flush eyes with water and get immediate medical attention.**

a. Cleanliness. Dirt, grease, oil, and debris can cover and hide serious problems. Use drycleaning solvent on all metal surfaces.

b. Screws and Nuts. Check screws and nuts for obvious looseness and missing, bent, or broken condition. Look for chipped paint, bare metal, or rust around screw heads. If any part seems loose, notify unit maintenance.

c. Welds. Look for loose or chipped paint, rust, or gaps where parts are welded together. If bad welds are found, notify supervisor.

d. Electric Wires and Connectors. Look for cracked or broken insulation, bare wires, and loose or broken connectors. Tighten loose connectors and make sure that wires are in good shape. If bad wires or connectors are found, notify supervisor.

e. Hydraulic Lines and Fittings. Look for wear, damage, and leaks and make sure clamps and fittings are tight. Wet area indicates leaks (see Para 2-7). If leaks or loose fittings and connectors are found, notify supervisor.

f. Damage is defined as: any condition that affects safety or renders the forklift unusable for mission requirements.

g. Rust and Corrosion. Check forklift body and frame for rust and corrosion. If any bare metal or corrosion exists, clean bare or corroded area, apply a thin coat of oil, and notify supervisor.

2-5. WARNINGS AND CAUTIONS.

Always observe the warnings and cautions in your PMCS table. Warnings and cautions appear before applicable procedures. You must observe these warnings and cautions to prevent serious injury to yourself and others and to prevent equipment from being damaged.

2-6. EXPLANATION OF TABLE ENTRIES.

a. **Item Number Column.** Numbers in this column are for reference. When completing DA Form 2404 (Equipment Inspection and Maintenance Worksheet), include the item number for the check/service indicating a fault. Item numbers also appear in the order that you must do checks and services for the intervals listed.

b. **Interval Column**. This column tells you when you must do the procedure in the procedure column. BEFORE procedures must be done immediately before you operate or use the equipment for its intended mission. DURING procedures must be done during the time you are operating or using the equipment for its intended mission. AFTER procedures must be done immediately after you have operated or used the equipment.

c. **Location. Item to Check/Service Column**. This column tells you the location and the item to be checked or serviced. The item location is underlined.

d. **Procedure Column.** This column tells you the procedure you must do to check or service the item listed in the Location, Item to Check/Service column.

e. **Not Fully Mission Capable If: Column.** This column tells you what faults will keep your equipment from being capable of performing its primary mission. If checks and services show faults listed in this column, do not operate the equipment. Follow standard operating procedures for maintaining the equipment or reporting equipment failure.

f. **Other Table Entries**. Be sure to observe all special information and notes that appear in your table.

2-7. LEAKAGE CLASSIFICATION AND DEFINITION.

The following describe the different types/classes of leaks and how they affect the status of the forklift. Become familiar with them and remember WHEN IN DOUBT, NOTIFY UNIT MAINTENANCE. Class I and II leaks are considered minor leaks and operations can continue under these conditions. When operating with these types of leaks, fluid levels must be checked regularly as required in the PMCS. Class III leaks must be reported to unit maintenance for corrective action. If there is any doubt about the type of leak, notify unit maintenance.

a. Class I Leaks. Class I leaks are identified by a wetness or discoloration not great enough to form drops. It is more of a seepage than a leak.

b. Class 1 Leaks. Class II leaks are identified by a flow of fluid great enough to form drops but not great enough to cause the drops to fall from the leak point.

c. Class 111 Leaks. Class III leaks are identified by a flow of fluid great enough to form drops that fall from the leak point.

If a Class III leak is discovered and the fluid level is below minimum on the dipstick or sight glass, the forklift cannot be operated until leak is repaired and fluid level is returned to normal.

Table 23. Operator Preventive Maintenance Checks and Services

Item No.	Interval	Location Item to Check/Service	Procedure	Not Fully Mission Capable If:
	DAILY	GENERAL	**NOTE** • **If the equipment must be kept in continuous operation, do only the procedures that can be done without disturbing operation. Make complete checks and services when the equipment is shut down.** • **Ensure that all lubrication requirements are performed on the forklift as directed in Chapter 3.** • **Perform WEEKLY, as well as BEFORE, PMCS if:** a. You are the assigned operator but have not operated the equipment since the last **WEEKLY**. b. You are operating the equipment for the first time. • Levers, pins, linkage, etc., not equipped with lubrication fittings, should operate freely and be clear of rust. • When checking oil/fuel levels, ensure forklift is on level surface for accurate reading.	

Table 2-3. Operator Preventive Maintenance Checks and Services - CONT.

Item No.	Interval	Location Item to Check/Service	Procedure	Not Fully Mission Capable If:
	DAILY-Continued	EXTERIOR	**WARNING** **Read and understand all of the safety precautions and warnings before performing any checks and services or personal injury can result.**	
1	Before		Perform walk-around inspection of forklift. Check for leaks or obvious damage that would require more detailed inspection.	Class III leaks or any fuel leaks.
2	Before	Safety decals, data plates, etc.	Check for damage and legibility (Para 2-11). Notify Unit Maintenance if necessary.	
			NOTE **Operation of forklift with inoperative windshield wipers or cracked windshield may violate AR 385-55.**	
3	Before Wipers	Wiper Arms and blades are serviceable.	Check that wiper arms operate and Notify Unit Maintenance if necessary.	
4	Before	Windshield and Windows	Clean off any debris. Check for cracked windshield and windows.	Overhead window is cracked.

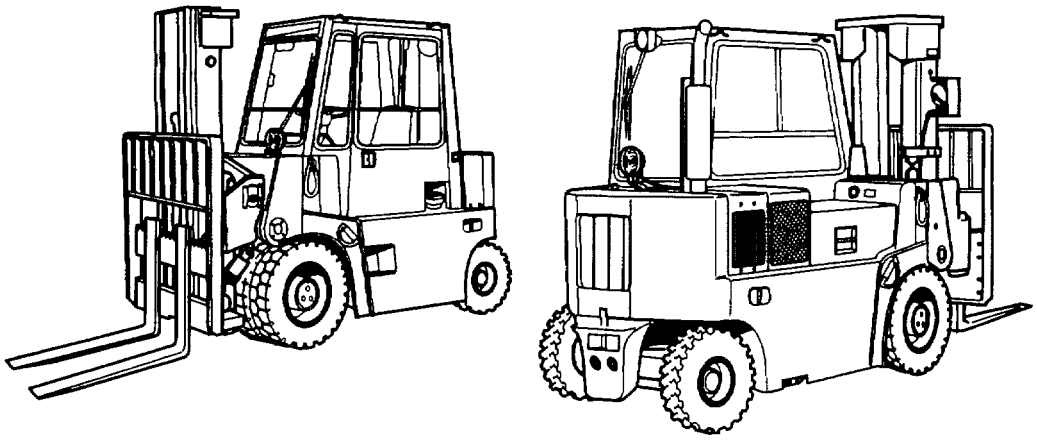

Table 2-3. Operator Preventive Maintenance Checks and Services - CONT.

Item No.	Interval	Location Item to Check/Service	Procedure	Not Fully Mission Capable If:
	DAILY-Continued	EXTERIOR-Continued		
5	Before	Top Window Guard	Check mounting hardware for signs of cracks.	

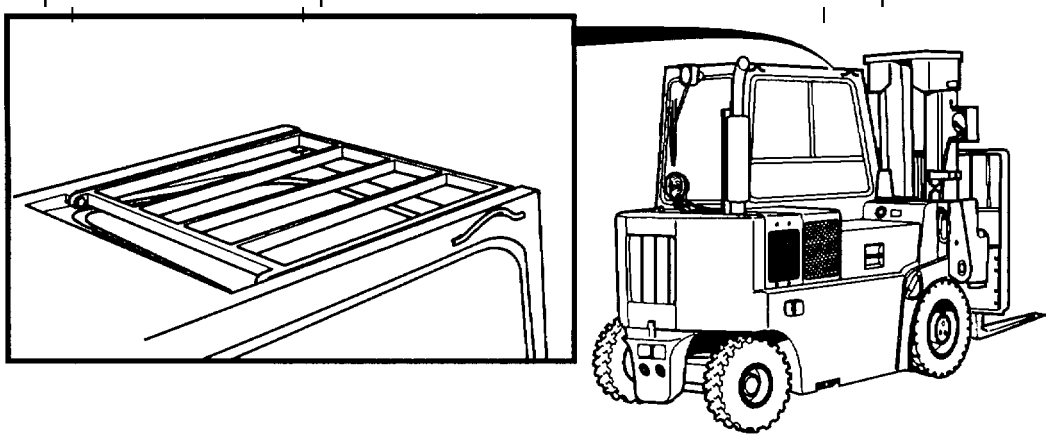

Table 2-3. Operator Preventive Maintenance Checks and Services - CONT.

Item No.	Interval	Location: Item to Check/Service	Procedure	Not Fully Mission Capable If:
	DAILY-Continued	ENGINE		
			WARNING **Remove all jewelry such as rings, dog tags, bracelets, etc. If jewelry contacts battery terminal, a direct short may result in instant heating of tools, damage to equipment, and injury or death to personnel.**	
6	Before	Batteries, Battery cables, Battery box	Check that batteries and cables are free of corrosion. Check that battery cables are secure. Check battery box for rust and corrosion. Check that battery box is secured on vehicle. Notify Unit Maintenance if necessary.	Battery cracked, missing, or engine will not start.

Table 2-3. Operator Preventive Maintenance Checks and Services - CONT.

Item No.	Interval	Location Item to Check/Service	Procedure	Not Fully Mission Capable If:
	DAILY-Continued	ENGINE		
	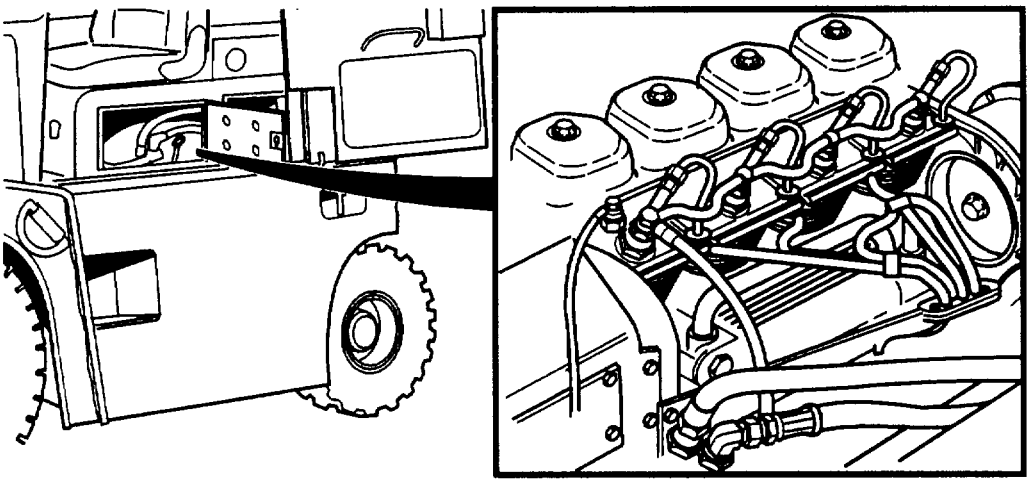			
7	Before	Fuel Tank Lines and Fittings	Check fuel tank lines and fittings for leaks or damage.	Leaks are present.
	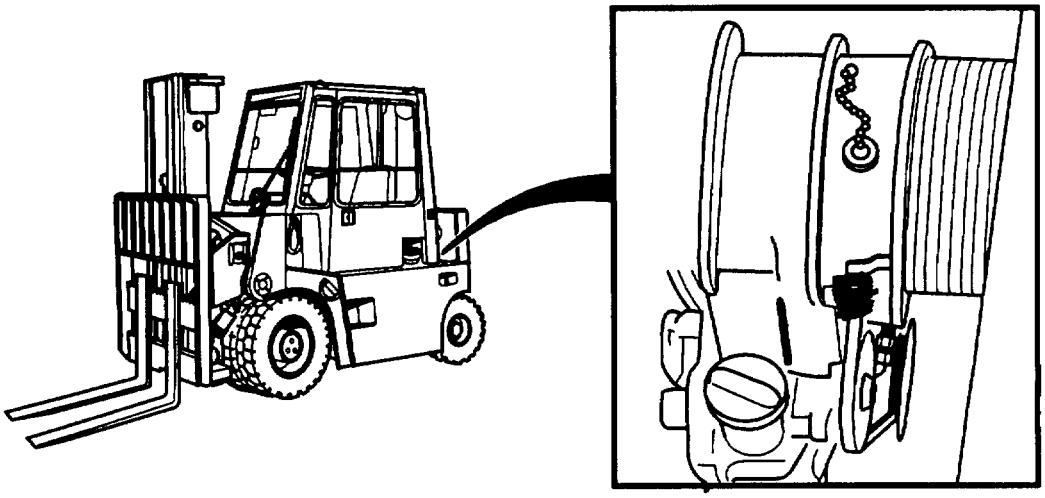			
8	Before	Drive belt	Check belts for worn, cracked, or frayed conditions.	Belt missing, or damaged.

Table 23. Operator Preventive Maintenance Checks and Services - CONT.

Item No.	Interval	Location Item to Check/Service	Procedure	Not Fully Mission Capable If:
	DAILY-Continued	ENGINE-Continued		
		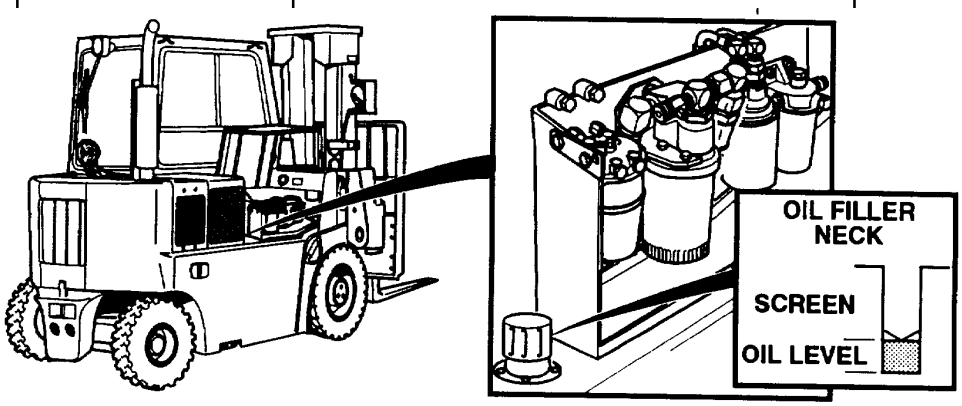		
9	Before	Hydraulic Oil Level	Check hydraulic fluid tank level (LO 10-3930-669-12).	
10	Before	Hydraulic Tank, Lines and Fittings	Check hydraulic lines and fittings for leaks or damage.	Class III leak present.
		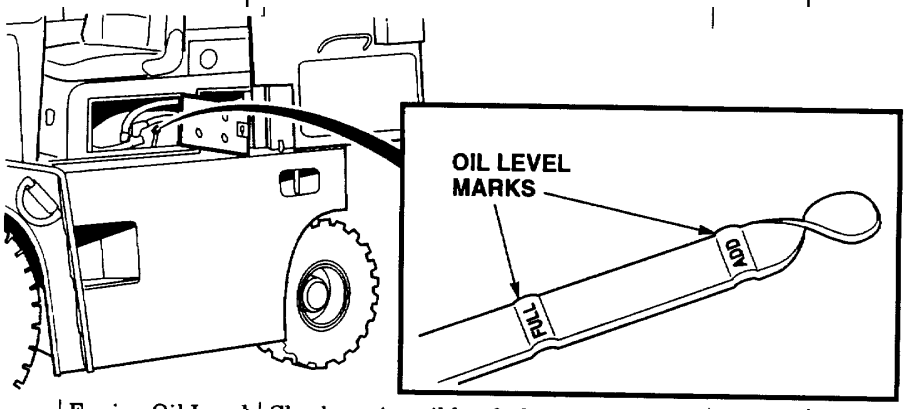		
11	Before	Engine Oil Level	Check engine oil level. Maintain oil level between the "ADD" and "FULL" marks. Refer to (Para 3-6) and LO 10-3930-669-12.	
12	Before	Transmission Oil Level	Check oil level dipstick. Check for presence of oil before starting engine. Refer to (Para 3-12) and LO 10-3930-669-12.	

Table 23. Operator Preventive Maintenance Checks and Services - CONT.

Item No.	Interval	Location Item to Check/Service	Procedure	Not Fully Mission Capable If:
	DAILY-Continued	INTERIOR		
	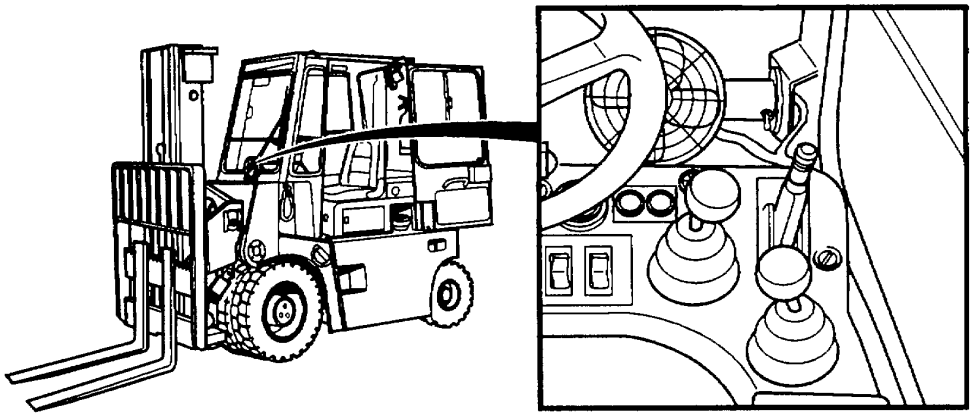			
13	Before	Parking Brake	With engine running, place transmission control lever in forward. At low travel speed apply parking brake. Forklift should come to a rapid stop. If forklift does not come to a rapid stop, release parking brake and turn knob on parking brake handle clockwise one turn. Retest. Shutdown the forklift (Para 3-10).	Parking brake cannot be adjusted enough to prevent forklift from moving.
	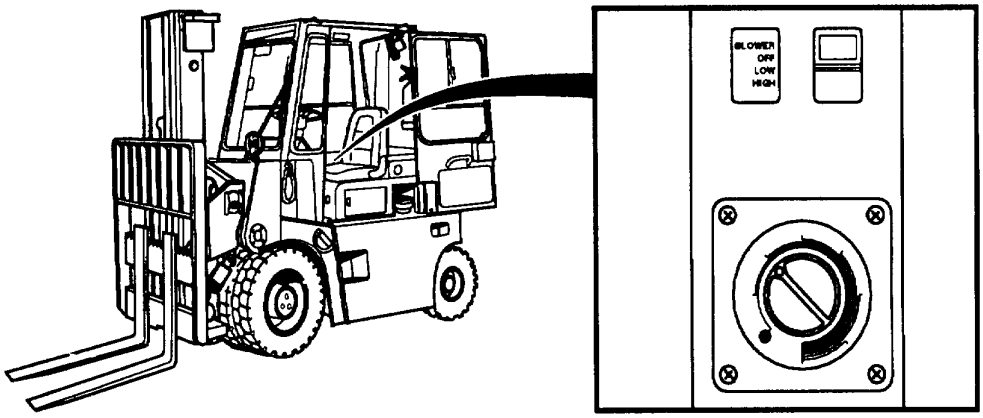			
14	During	Heater Switch	Check operation of the blower switch and heater temperature dial.	

Table 2-3. Operator Preventive Maintenance Checks and Services - CONT.

Item No.	Interval	Location Item to Check/Service	Procedure	Not Fully Mission Capable If:
	DAILY-Continued	INTERIOR-Continued		
			NOTE **Safety of operator during operation is impaired by condition of seat and seat belt.**	
15	Before	Operator's Seat and Seat Belt	Check that seat is fastened securely. Check seat belt straps for worn areas and tears. Check that seat belt is attached firmly. Check buckle for correct operation. Notify Unit Maintenance if necessary.	Seat belt or buckle is damaged or not attached firmly to truck.
16	During	Service Brake	Check service brakes by driving forward at a low rate of speed and applying service brakes. Forklift should stop smoothly without noticeable side pull.	Brakes fade, slip, will not stop, or hold Forklift.
17	During	Steering	Check that steering is free and easy.	Steering sticks or is hard to steer.

Table 2-3. Operator Preventive Maintenance Checks and Services - CONT.

Item No.	Interval	Location Item to Check/Service	Procedure	Not Fully Mission Capable If:
	DAILY-Continued	INTERIOR-Continued		
	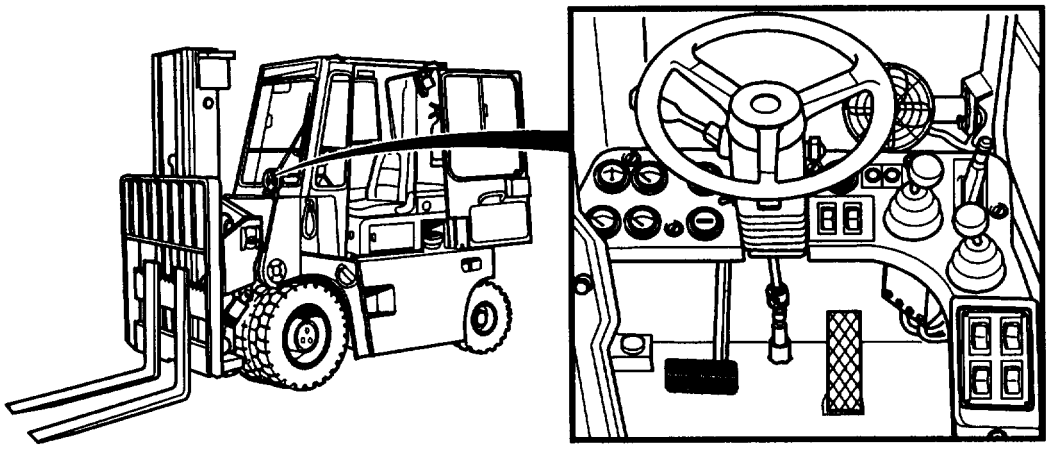			
18	During	Instrument Panel	Inspect panel for damage, unserviceable instruments, and broken glass. instrumentation regularly for proper function of all systems.	A malfunction/deficiency Monitor is observed during operation which would damage the equipment if operation were continued.
			a. Engine Oil Pressure: • 30 psi at idle (min. allowable)	Oil pressure gauge is inoperative. Oil pressure is below 30 psi.
			b. Air Restriction Indicator: • Indicates more than 20 in. Notify Unit Maintenance.	
			c. Ammeter: • Normal range is greater than zero amps.	Ammeter inoperative.
			d. Engine Temperature: • Not to exceed 250°F (121°C).	Engine temperature gauge inoperable.

Table 2-3. Operator Preventive Maintenance Checks and Services - CONT.

Item No.	Interval	Location Item to Check/Service	Procedure	Not Fully Mission Capable If:
	DAILY-Continued	INTERIOR-Continued		
		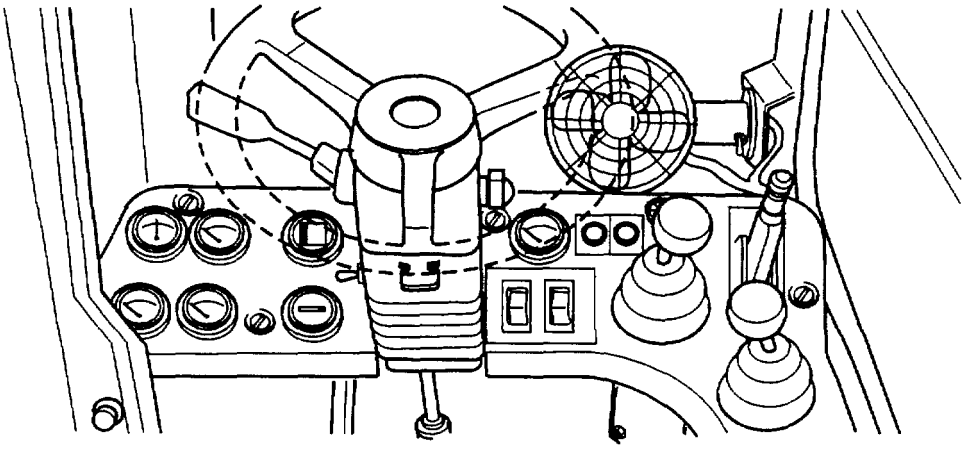		
18	During	Instrument Panel-Continued	e. Hour meter: • Dial should rotate every 10th of an hour. f. Transmission Temperature: • Not to exceed 230°F (110°C).	Transmission gauge inoperable.
19	During	Horn	Check for proper operation.	

Table 2-3. Operator Preventive Maintenance Checks and Services - CONT.

Item No.	Interval	Location Item to Check/Service	Procedure	Not Fully Mission Capable If:
	DAILY-Continued	INTERIOR-Continued		
		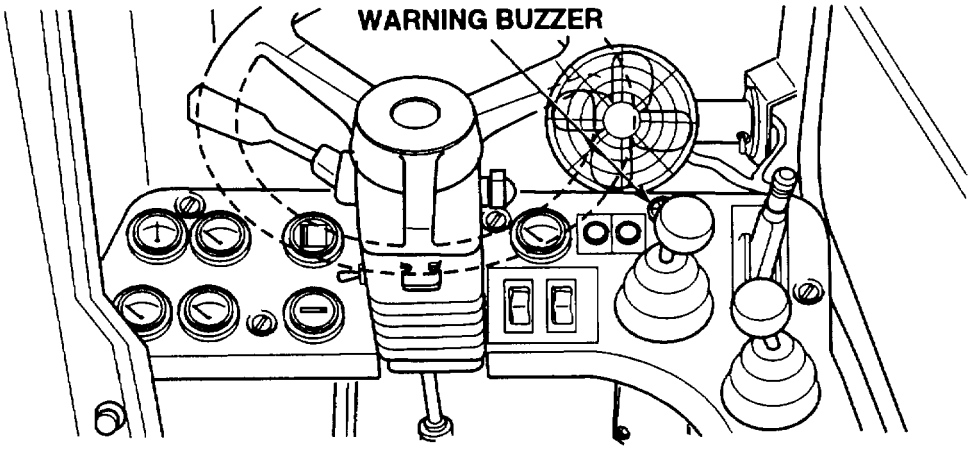		
20	During	Belt, Buzzer and Warning Lights EXTERIOR	Monitor broken belt warning light and listen for warning buzzer during operation.	Warning light or buzzer indicates a malfunction and corrective action by the operator does not correct the problem.
		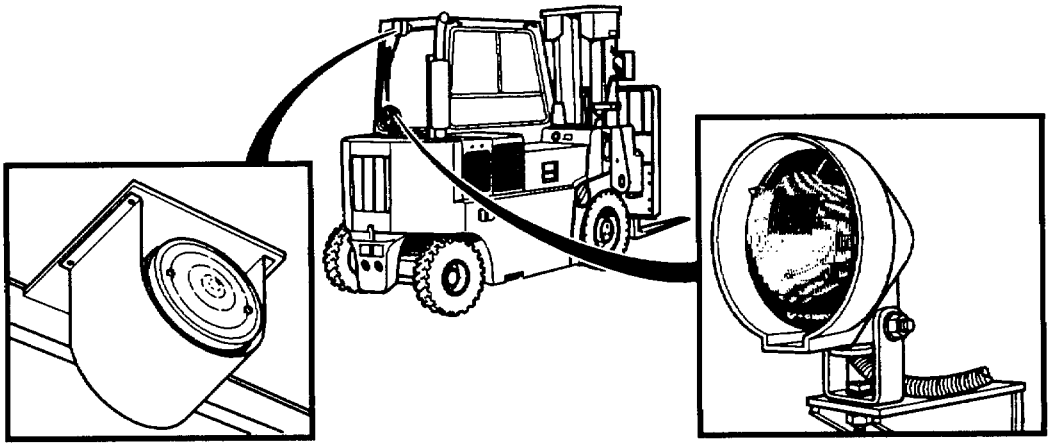		
21	During	Work Lights and Stop/Taillight	Check for proper operation. Notify Unit Maintenance.	

Table 2-3. Operator Preventive Maintenance Checks and Services - CONT.

Item No.	Interval	Location Item to Check/Service	Procedure	Not Fully Mission Capable If:
	DAILY-Continued	EXTERIOR-Continued		
22	During	Mast Assembly	a. Check that mast raises and lowers evenly and movement is smooth. Notify Unit Maintenance if necessary.	Mast does not operate, or operates roughly.
			b. Check that forward and backward mast tilt is smooth. Notify Unit Maintenance if necessary.	Tilt does not operate, or operates roughly.
			c. Check that carriage side-shift operates smoothly. Notify Unit Maintenance if necessary.	Carriage side-shift does not operate, or operates roughly.
			d. Check backrest assembly for cracks, broken welds, or missing parts. Notify Unit Maintenance if necessary.	
			e. Check that forks open and close smoothly. Notify Unit Maintenance if necessary.	Forks do not operate, or operate roughly.

Table 2-3. Operator Preventive Maintenance Checks and Services - CONT.

Item No.	Interval	Location Item to Check/Service	Procedure	Not Fully Mission Capable If:
	DAILY-Continued	ENGINE		
23	During	Engine	Listen for unusual noise, misfiring, and rough idling of engine. Notify Unit Maintenance.	Engine is idling rough, misfiring, or making unusual noise.
		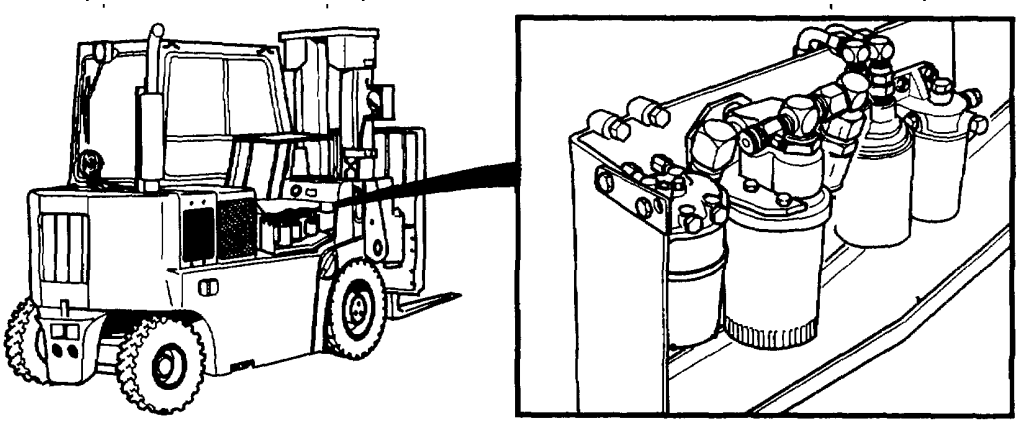		
24	After	Fuel/Water Separator	Check fuel/water separator for leaks and damage. Open drain cock and drain water into suitable container (approximately one pint).	Any leak present.
		EXTERIOR 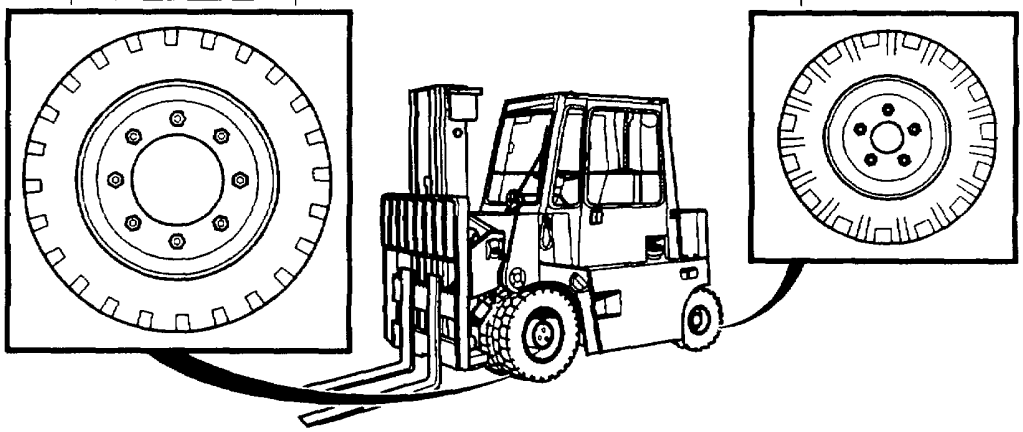		
25	After	Tires, Lug Nuts, and Wheels	Check for missing lug nuts. Check tires for tread wear.	Two or more lug nuts are missing from the same wheel. No tread evident across the entire contact surface of the tire.

Table 2-3. Operator Preventive Maintenance Checks and Services - CONT.

Item No.	Interval	Location: Item to Check/Service	Procedure	Not Fully Mission Capable If:
	DAILY-Continued	EXTERIOR-Continued		
26	After	Leaks	Check underneath forklift for evidence of fluid leaks.	Class III leak present.
27	Weekly	Mast Assembly	Check mast assembly for bends, dents, and cracks.	Mast assembly bent or cracked welds.
28	Weekly	Exhaust System	Check muffler and exhaust pipe for corrosion, damage, and loose fasteners.	

Table 2-3. Operator Preventive Maintenance Checks and Services - CONT.

Item No.	Interval	Location Item to Check/Service	Procedure	Not Fully Mission Capable If:
	MONTHLY	EXTERIOR-Continued		
29	Monthly	Handles and Anti-skid Steps	Check for damage, rust, and corrosion. Notify Unit Maintenance.	
30	Monthly	Access Doors	Check for missing or loose attaching parts and broken or loose door latches and door hinges. Notify Unit Maintenance.	
31	Monthly	Engine Access Panel	Check for missing or loose attaching parts and broken or loose access panel hinge. Notify Unit Maintenance.	
32	Monthly	Cab Door	Check for missing or loose attaching parts and broken or loose door latches and door hinges. Notify Unit Maintenance.	

Section III. OPERATION UNDER USUAL CONDITIONS

This section contains all instructions necessary to operate the forklift under usual (normal) conditions. These instructions include preparing the forklift for operation, start-up instructions, operation, and shutdown procedures.

2-8. ASSEMBLY AND PREPARATION FOR USE.

Ensure that initial preparation for use has been performed by Unit Maintenance after shipment.

2-9. INITIAL ADJUSTMENTS, CHECKS, AND SELF-TEST.

a. Perform all operator PMCS procedures designated in the interval column (Table 2-3).

b. Familiarize yourself with all controls and indicators.

c. Adjust rear view mirror to desired position.

2-10. OPERATING PROCEDURES.

a. Introduction. The following steps describe the positions that the controls must be in before starting the forklift. Descriptions of controls, indicators, and instruments called out in these procedures can be found in Tables 2-1 and 2-2.

b. Adjust seat.

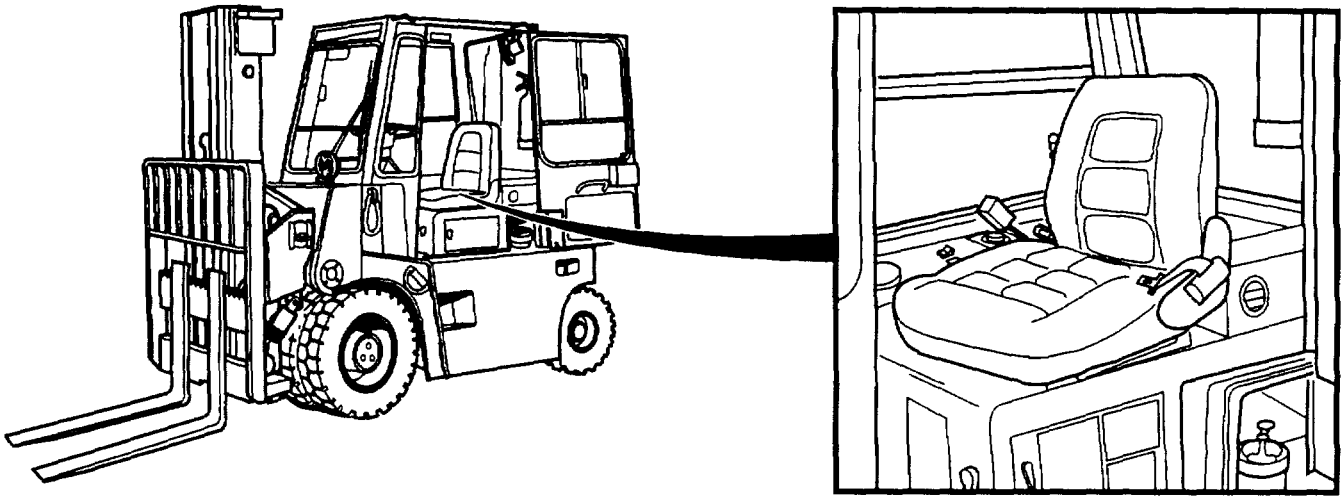

NOTE
Sit in seat to make the following adjustments.

(1) Turn seat back tilt knob (Table 2-1, 23) to control back tilt until comfortable position is found.

(2) Pull seat slide lever (Table 2-1, 22) out to release lock. Move seat forward or backward until comfortable position is found and release lever to lock seat in place.

(3) Position seat tension adjustment lever to match body weight (Table 2-1, 24).

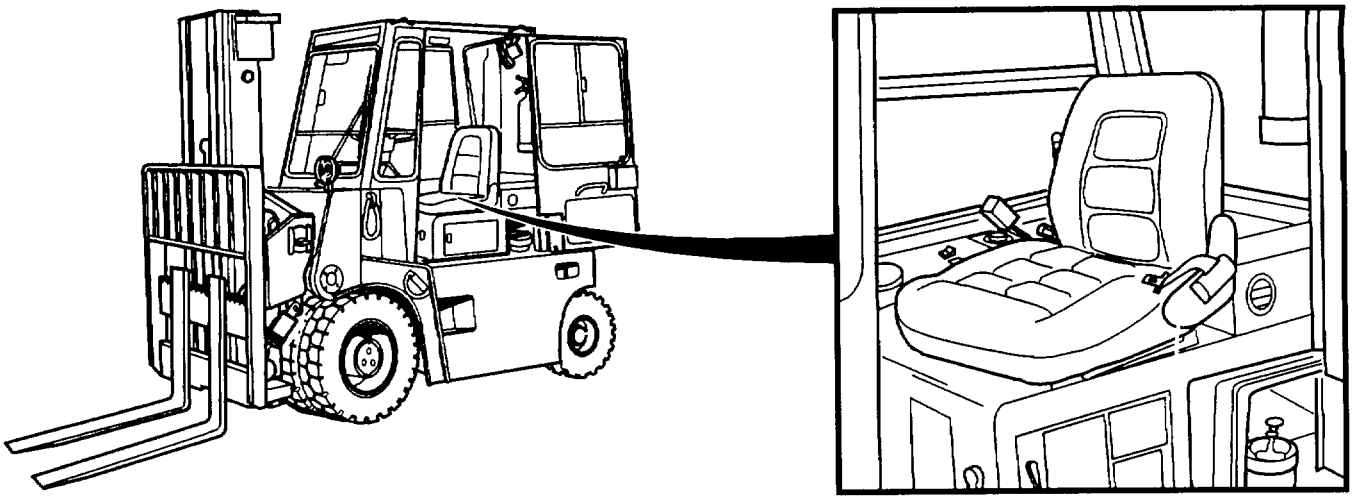

(4) Pull out enough seat belt (Table 2-1, 21) to reach the seat belt buckle.

(5) Push seat belt clip (LH) into buckle (RH) until a click is heard.

(6) Place seat belt as low on the hips as possible and pull seat belt until snug.

(7) To release seat belt, push in buckle release button and pull clip from buckle.

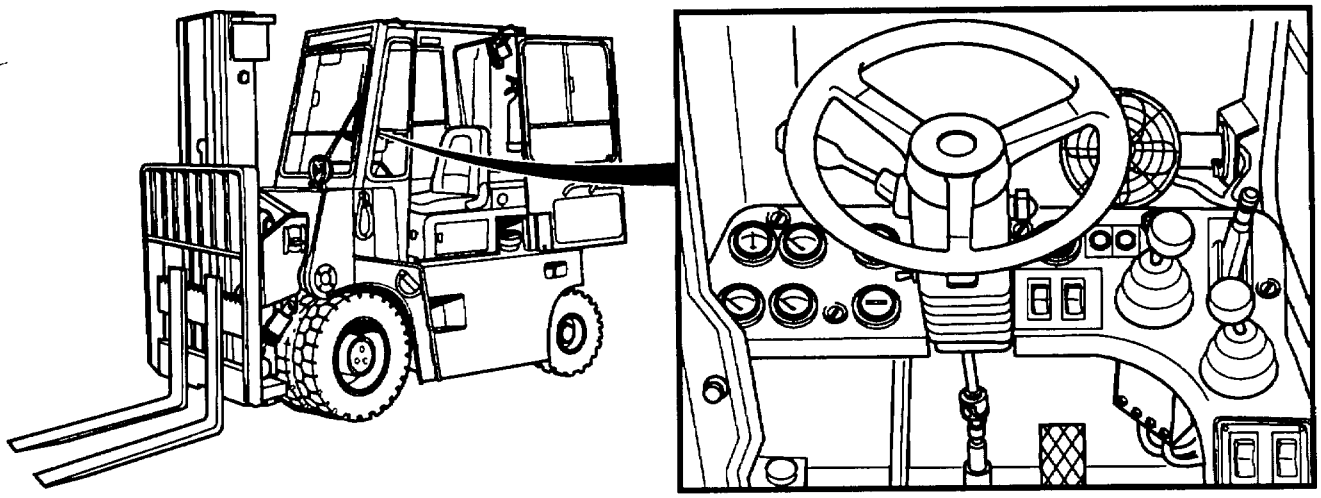

c. Adjust Steering Wheel Tilt.

(1) Lift steering wheel tilt tab (Table 2-1, 9) on steering column.

(2) Tilt steering column to desired position and release tab to lock steering column in place.

2-10. OPERATING PROCEDURES (CONT).

d. Engine Starting.

(1) Apply parking brake (Table 2-1, 2).

(2) Place transmission control lever (Table 2-1, 5) in neutral position.

(3) Turn MAIN POWER switch (Table 2-1, 20) to the ON position.

WARNING

Ensure that all personnel are clear of forklift before engine start is attempted. Operator must visually check to see that all areas of the forklift are clear of personnel before attempting to start engine. Failure to do so could result in serious injury or death to personnel.

CAUTION

- **Do not turn engine switch to start position while engine is rotating, or damage to equipment may result.**
- **If engine fails to start, wait 15 seconds before next start attempt to allow starter to cool.**

NOTE

If engine fails to start, the engine switch must be turned to the off position, prior to the next attempt. This will disengage an engine restart interlock which prevents starter engagement from the ignition position.

(4) Turn the engine switch (Table 2-1, 1) to the start position for about 15 seconds or until engine starts. When engine starts, release switch. Engine switch will return to ignition position.

CAUTION

If OIL PRESS gauge does not show engine oil pressure within 5 seconds after starting engine, shut down engine immediately and notify supervisor. Lack of lubrication will damage engine.

(5) Check that engine oil pressure gauge (Table 2-2, 3) reads 30 psi (207 kPa) minimum during idle and 30 to 60 psi (207-414 kPa) during normal operation.

CAUTION

Engine oil pressure gauge should indicate 30 psi (207 kPa) minimum when engine is running. Lack of lubrication will damage engine.

(6) Run engine for approximately three minutes.

(7) Perform operator PMCS procedures designated **During** in the Interval column (Table 2-3).

e. Forklift Driving Procedures.

WARNING

- **Depressing the brake at slow engine speeds while attempting to start up a grade can place the forklift in inching mode. This can result in unanticipated movement of forklift and injury to personnel or damage to equipment.**
- **Downshifting when traveling at a high rate of speed can result in abrupt deceleration, possibly causing damage to equipment or injury to personnel.**
- **Hearing protection is required for operator and also for all personnel working around this forklift during operation.**

Typical driving procedures are covered in Steps 1-6 below. Operators must be aware that when brakes are applied at slow engine speeds, the forklift operates in inching mode. Inching mode permits the drive clutches to slip. On grades, this can result in unanticipated movement of the truck down the grade while attempting to start up the grade. To counter this situation, fully release the brake while placing the unit in gear and simultaneously depressing the throttle.

Operators must also avoid downshifting when traveling at high rates of speed as this action results in extremely abrupt deceleration.

(1) Pull mast assembly lift/lower/tilt lever (Table 2-1, 15) back to raise the forks to travel position (8 to 10 inches above ground).

(2) Press brake pedal (Table 2-1, 3) and hold it in the braking position.

(3) Release parking brake (Table 2-1, 2).

(4) Place transmission control lever (Table 2-1, 5) in forward or reverse position as desired.

(5) Release brake pedal (Table 2-1, 3) and then gradually depress throttle pedal (Table 2-1, 4) until reaching desired speed.

(6) Press brake pedal (Table 2-1, 3) to slow or stop forklift.

2-10. OPERATING PROCEDURES (CONT).

f. Load Retrieval Operating Procedure Using Mast Pivot.

CAUTION

- **Observe the forklift load rating on the data plate. Never handle loads in excess of specified rating. Damage to load or equipment may occur.**
- **Do not handle unstable or loosely stacked loads. Damage to load or equipment may occur.**

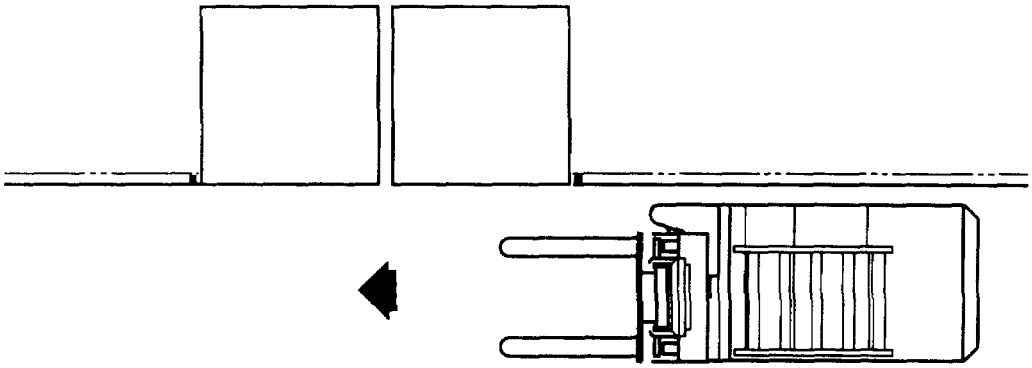

(1) Approach the load opening and raise the forks to the proper elevation.

(2) Shift mast assembly slightly to the left of center while keeping forklift parallel to load.

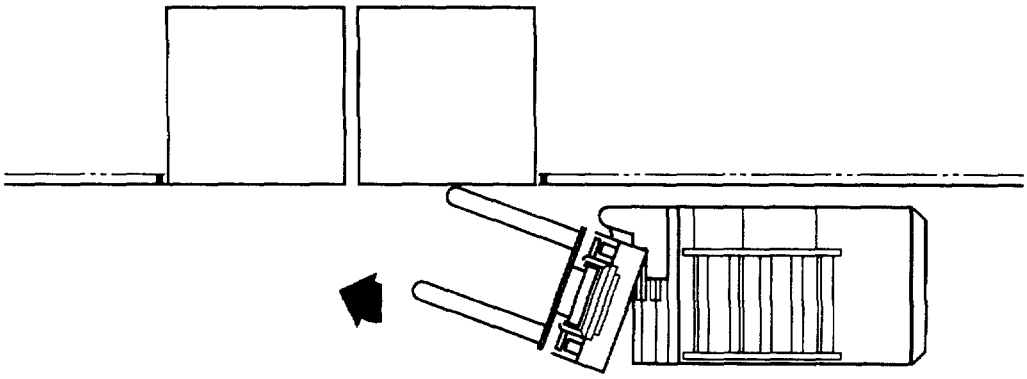

CAUTION

Ensure that fork level position indicators (Table 2-1, 6) are aligned prior to lifting load. Damage to equipment can occur.

(3) Continue approaching the load opening at a slow (creep) speed and pivot forks toward the load approximately 30 degrees.

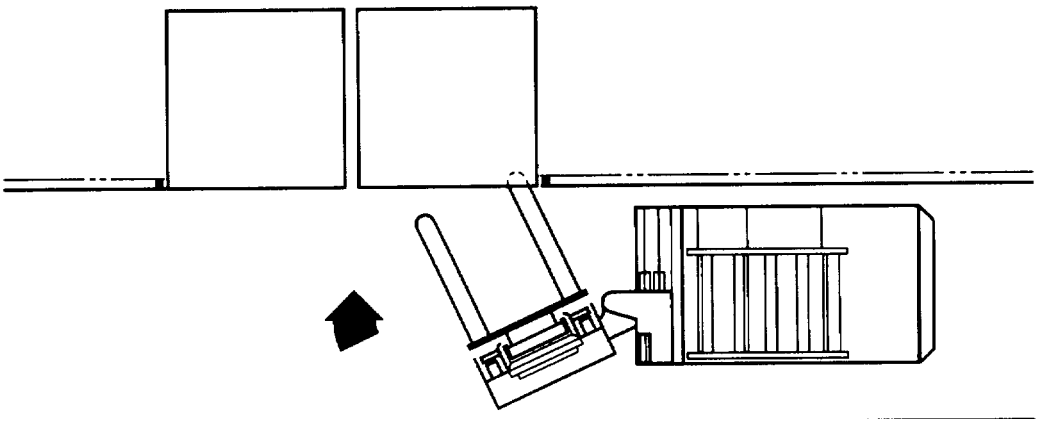

(4) As the forward right corner of the fork clears the load vertical member, shift the mast assembly left and at the same time, pivot forks clockwise towards load to an angle of approximately 45 degrees. Stop the shift motion.

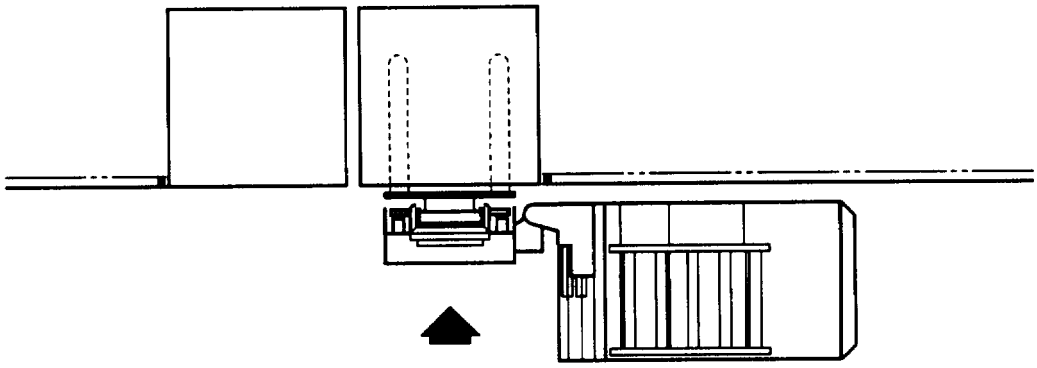

CAUTION
Ensure the forks are centered in the load or damage to load or equipment may occur.

(5) Continue to pivot the forks clockwise into the load while the forklift is still moving forward at a slow (creep) speed until the mast assembly is parallel to the load and the forks are centered in the pallet fork openings.

(6) Shift the mast assembly to the right until the forks are completely in or under the load.

(7) Raise the load enough to clear the rack horizontal members or ground.

2-10. OPERATING PROCEDURES (CONT).

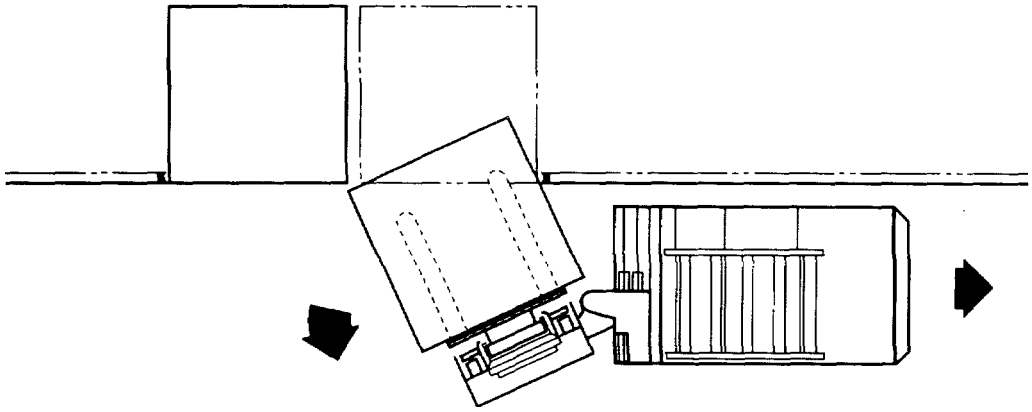

NOTE

- **The load face nearest the operator should be very close to the vertical rack member and in view of the operator.**
- **You will notice mast assembly counterclockwise pivot and left-hand shift action at the same time. These functions will not be synchronized and one function may stop before the other.**

(8) Shift the loaded mast assembly to the left until the load is more than halfway out. When the load is more than halfway out, begin moving in reverse at a slow (creep) speed and pull the mast assembly pivot/shift joystick (Table 2-1, 16) rearward and to the left.

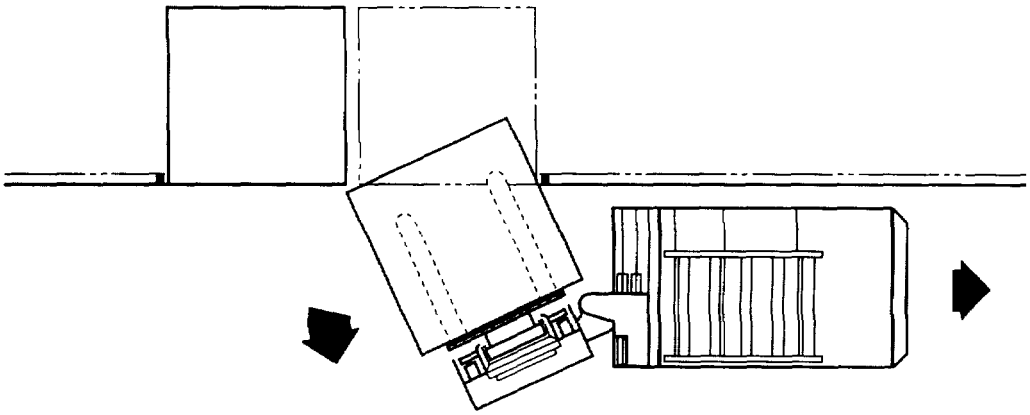

(9) When the load is partially shifted to the left and at an angle of approximately 45 degrees, stop the left-hand shifting motion.

(10) With the forklift still moving in reverse at a slow (creep) speed, continue to pivot the load counterclockwise until the far corner of the load is clear of the opening. Continue to pivot load while shifting mast assembly back to the right until load is centered in front of the truck.

(11) Lower the load to approximately 12 inches (305 mm) above the ground. Refer to Step e. for driving procedures.

g. Load Placement Operating Procedure Using Mast Pivot.

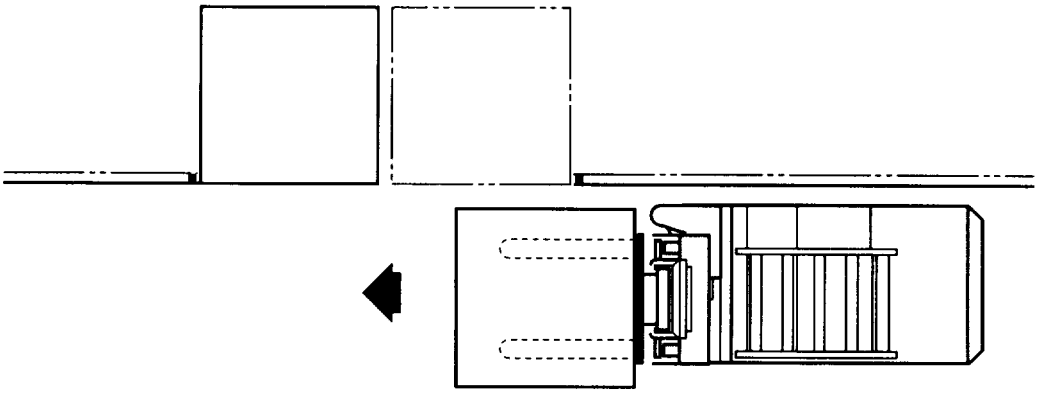

(1) Approach the rack opening at a slow (creep) speed keeping forklift parallel to rack.

(2) While approaching the rack opening, raise the load to the proper height.

(3) While approaching the rack opening, shift the mast assembly slightly to the left of center and begin pivoting load clockwise towards rack.

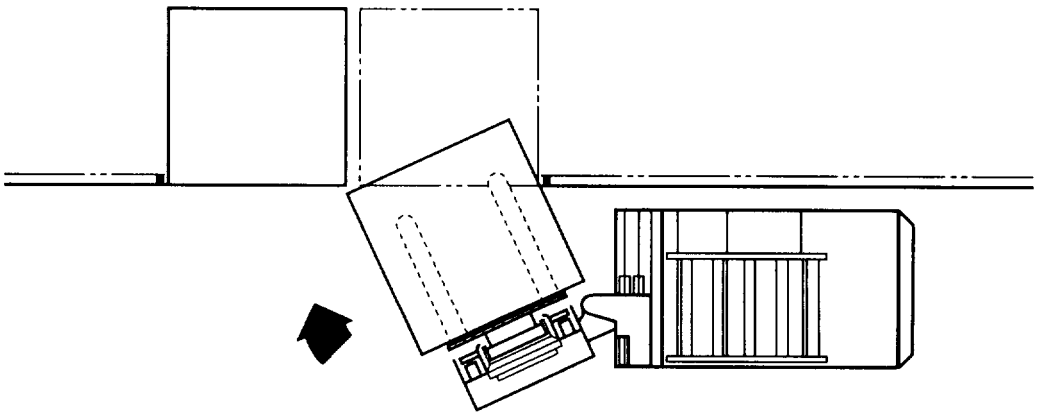

NOTE

- **The load face nearest the operator should be very close to the vertical rack member and in view of the operator.**
- **You will notice mast assembly clockwise pivot and left-hand shift action at the same time. These functions will not be synchronized and one function may stop before the other.**

(4) As the right corner of the load clears the rack vertical member, shift the mast assembly farther to the left and pivot load clockwise toward the rack as much as possible.

2-10. OPERATING PROCEDURES (CONT).

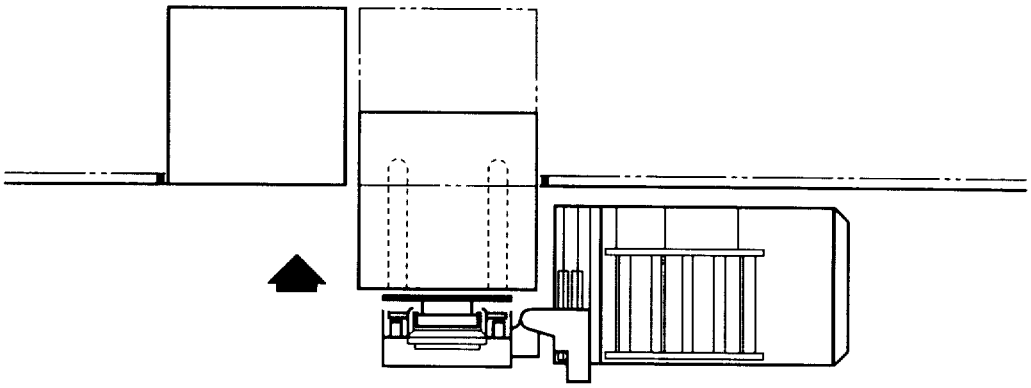

(5) Continue pivoting the load clockwise into the rack while the forklift is still moving forward at a slow (creep) speed until the load is perpendicular to the rack (mast assembly parallel to rack).

(6) Shift the mast assembly to the right until the load is completely in the rack opening.

(7) Lower the forks until the load is completely supported by the rack.

(8) Start to shift the mast assembly to the left.

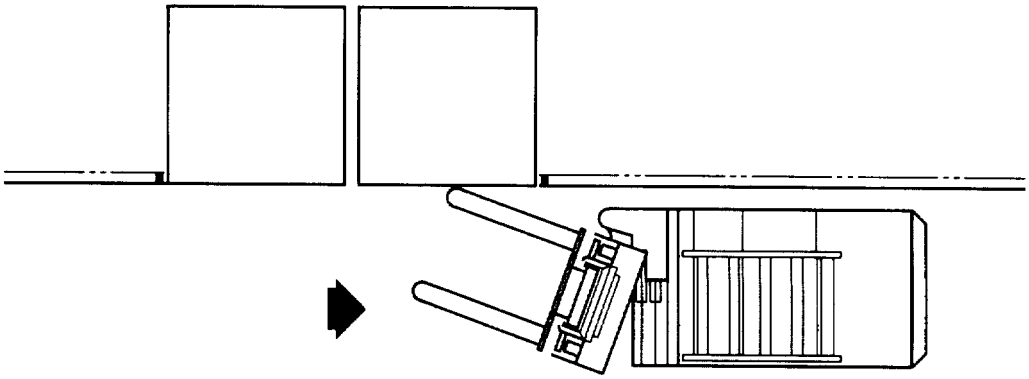

NOTE

You will notice mast assembly counterclockwise pivot and left-hand shift action at the same time. These functions will not be synchronized and one function may stop before the other.

(9) With the forklift moving in reverse at a slow (creep) speed, pull the mast assembly pivot/shift joystick (Table 2-1, 16) rearward and to the left.

(10) When the forks are partially shifted to the left and at an angle of approximately 45 degrees, stop the left-hand shifting motion.

(11) With the forklift still moving in reverse at a slow (creep) speed, continue to pivot the forks counterclockwise until forks clear the load. Continue to pivot counterclockwise while shifting back to the right until forks are centered in front of the forklift.

h. Forklift Shutdown Procedure.

CAUTION
Do not apply parking brake when forklift is moving unless brakes have failed.

NOTE
To shut down engine only, perform Steps (4) and (5) below.

(1) Apply parking brake (Table 2-1, 2).

(2) Place transmission control lever (Table 2-1, 5) in neutral position.

(3) Lower mast assembly so that fork tips are on the ground.

(4) Turn engine switch (Table 2-1, 1) to the OFF position.

(5) Turn MAIN POWER switch (Table 2-1, 20) to the OFF position.

(6) Chock outside of steering and drive wheels.

(7) Perform operator PMCS procedures designated AFTER in the interval column (Table 2-3).

i. Opening of Access Doors and Covers.

(1) **Cab Door.** Pull latch out and open cab door.

(2) **Engine Access Cover.** Turn latch clockwise and open cover.

(3) **Left-Hand Rear Engine Access Cover.** Release two latches and raise engine access cover.

(4) **Right-Hand Engine Access Cover.** Grab two lift handles and lift up on right-hand engine access cover.

J. Closing of Access Doors and Covers.

(1) **Cab Door.** Close cab door.

(2) **Engine Access Cover.** Close cover and turn latch counter clockwise.

(3) **Left-Hand Rear Engine Access Cover.** Lower engine access cover and lock two latches.

(4) **Right-Hand Engine Access Cover.** Grab two lift handles and lower right-hand engine access cover.

2-11. DECALS AND INSTRUCTION PLATES.

Figures 2-1 and 2-2 show the locations of the forklift's data plates and decals.

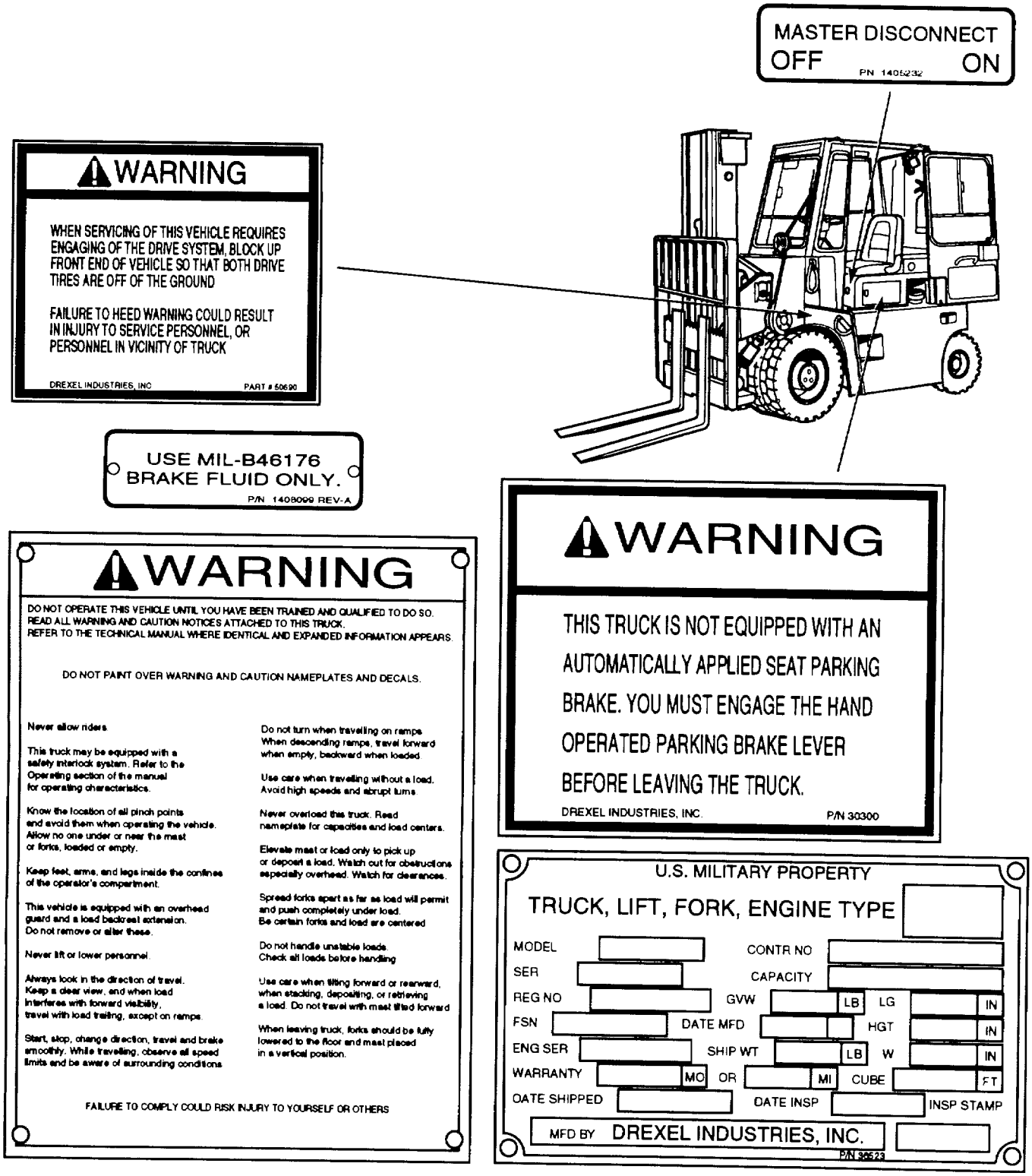

Figure 2-1. Data plates and decals (sheet 1 of 7).

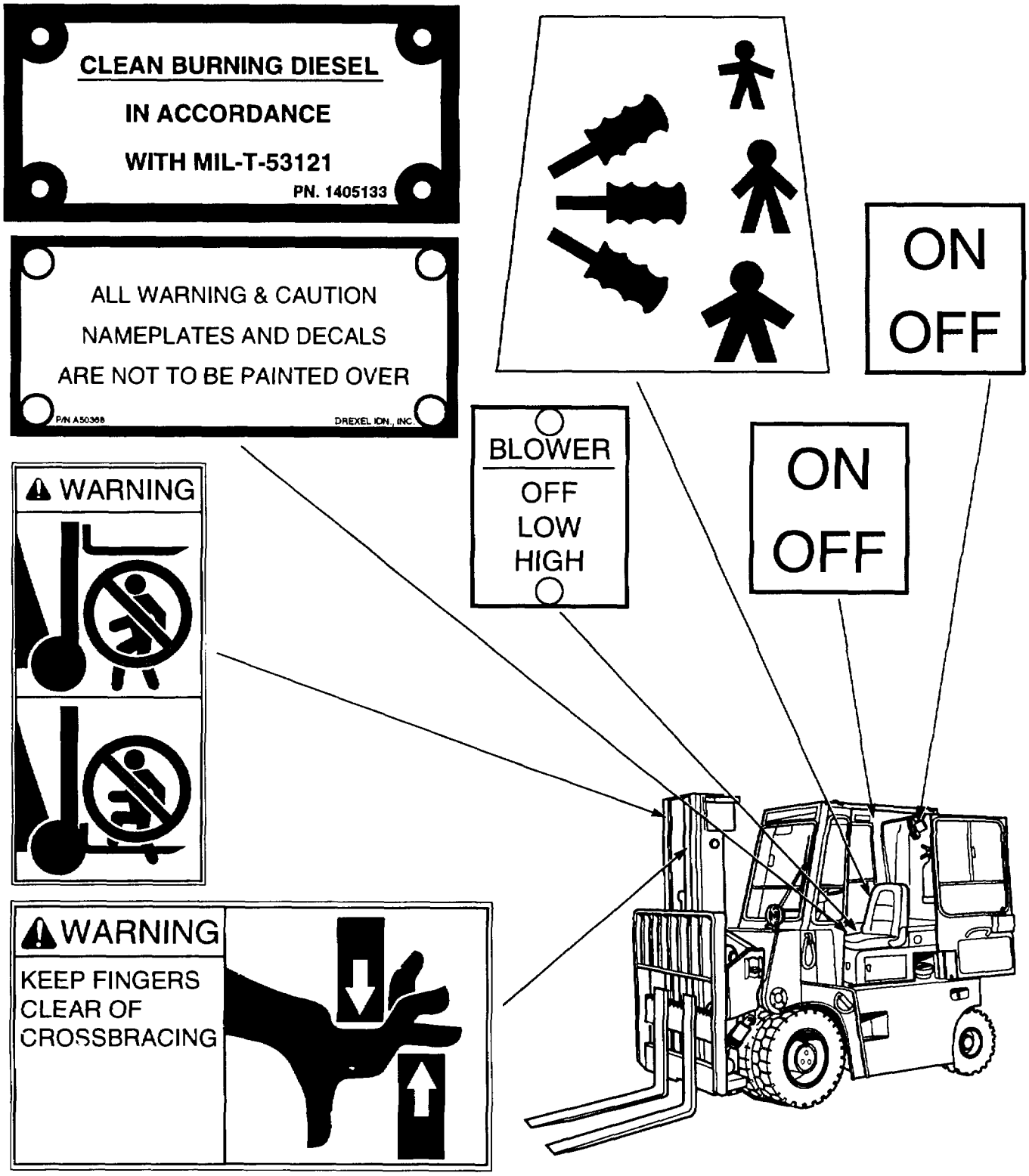

Figure 2-1. Data plates and decals (sheet 2 of 7).

2-11. DECALS AND INSTRUCTION PLATES (CONT).

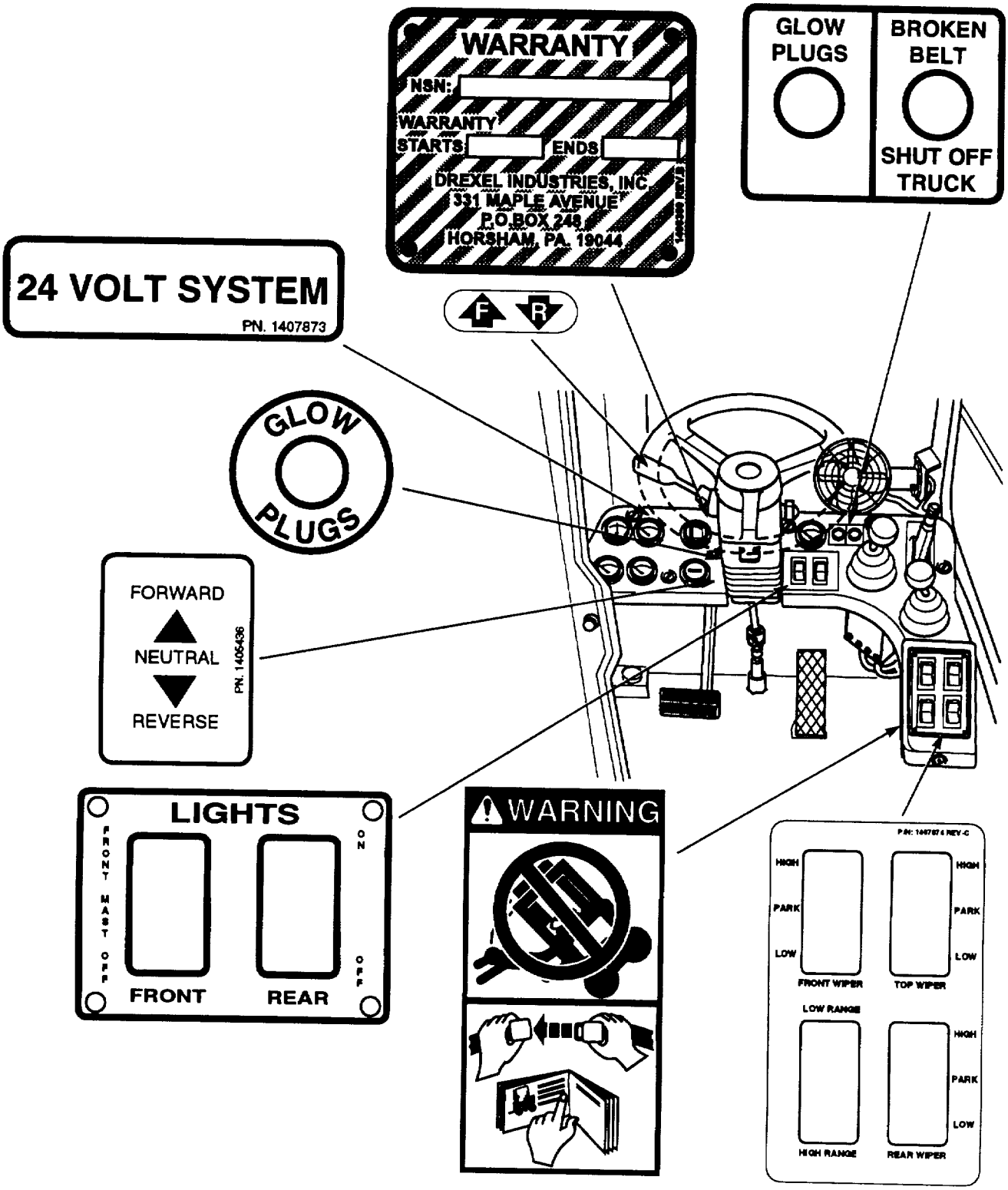

Figure 2-1. Data plates and decals (sheet 3 of 7).

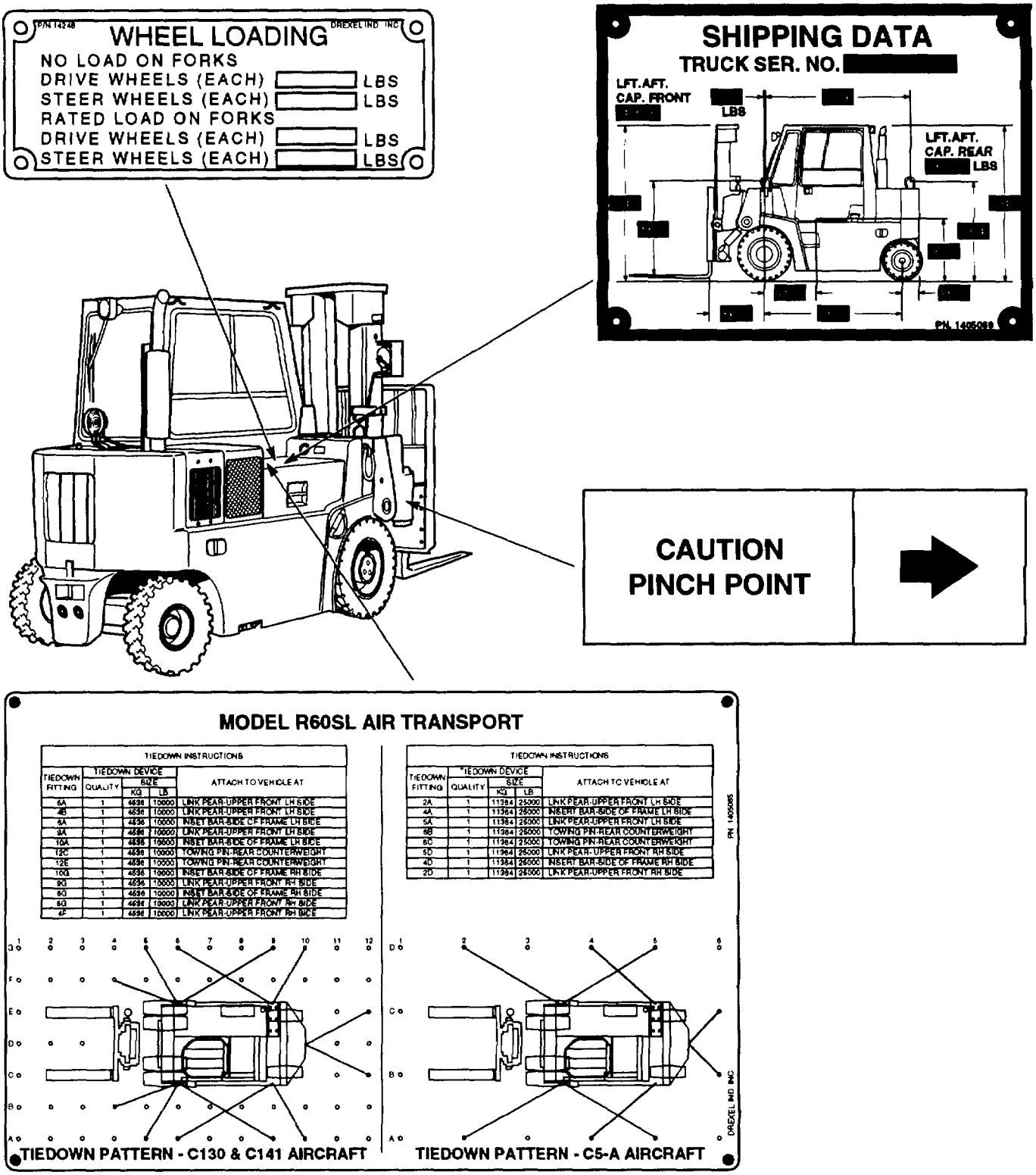

Figure 2-1. Data plates and decals (sheet 4 of 7).

2-11. DECALS AND INSTRUCTION PLATES (CONT).

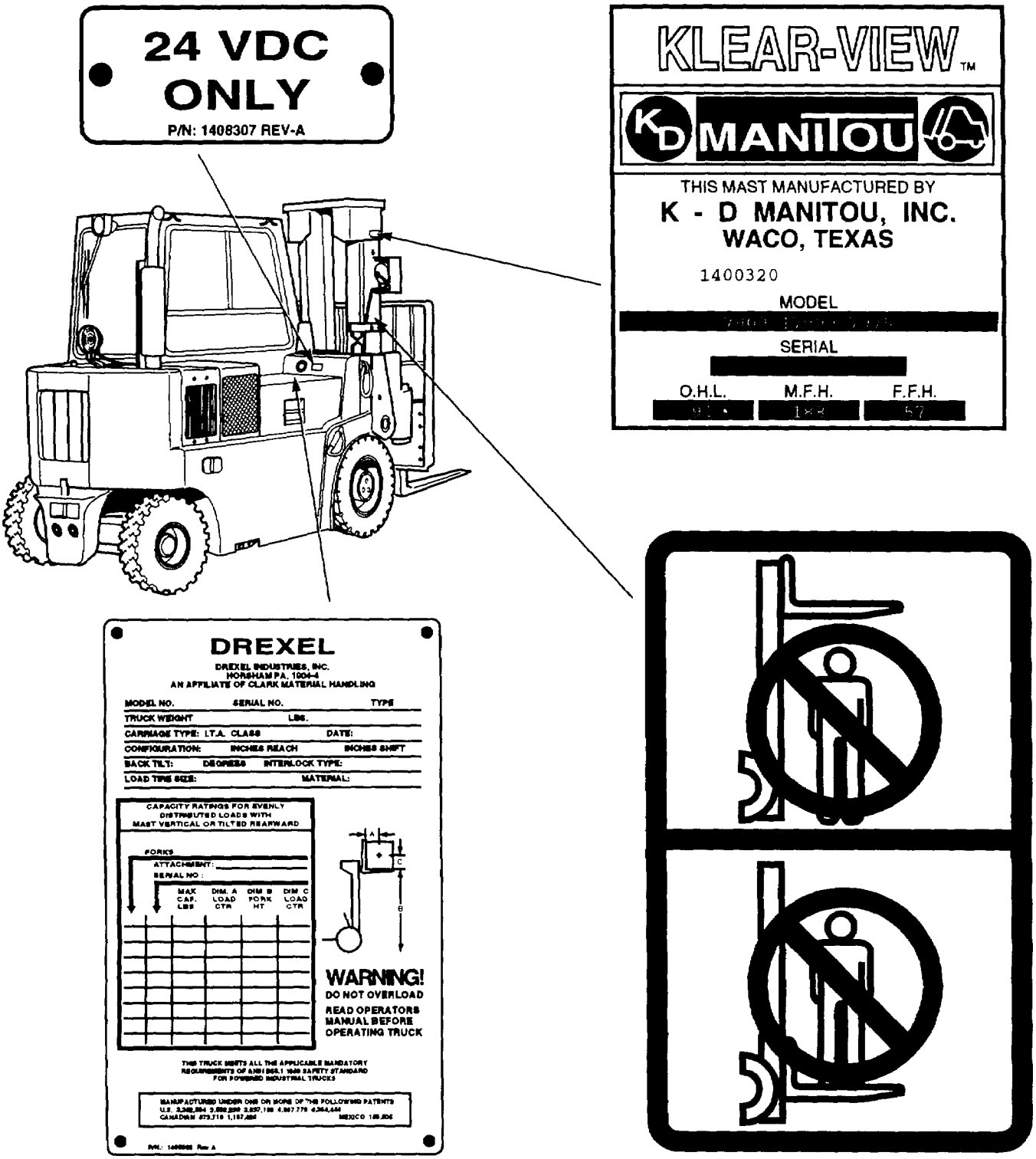

Figure 2-1. Data plates and decals (sheet 5 of 7).

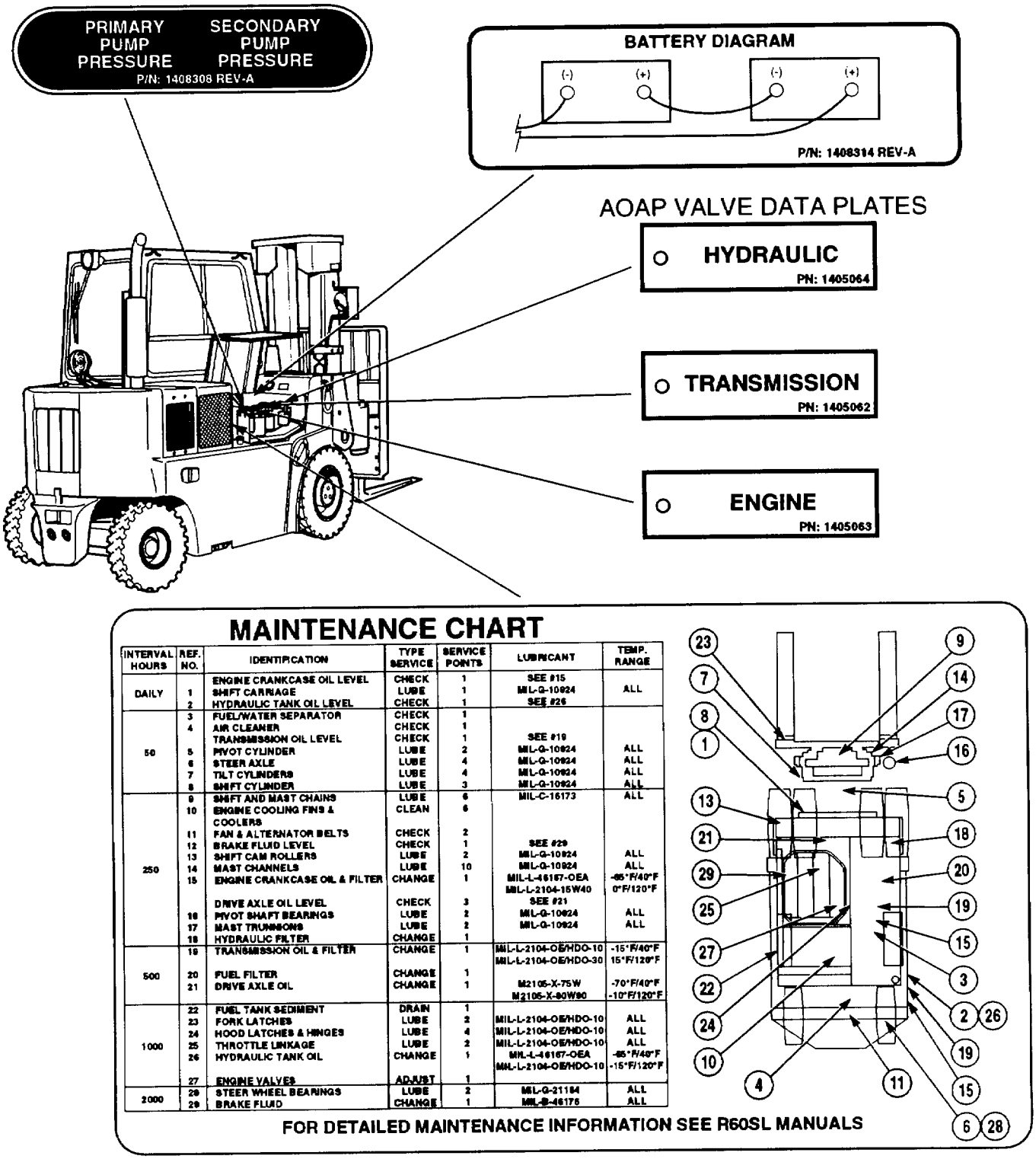

INTERVAL HOURS	REF. NO.	IDENTIFICATION	TYPE SERVICE	SERVICE POINTS	LUBRICANT	TEMP. RANGE
DAILY		ENGINE CRANKCASE OIL LEVEL	CHECK	1	SEE #15	
	1	SHIFT CARRIAGE	LUBE	1	MIL-G-10924	ALL
	2	HYDRAULIC TANK OIL LEVEL	CHECK	1	SEE #26	
50	3	FUEL/WATER SEPARATOR	CHECK	1		
	4	AIR CLEANER	CHECK	1		
		TRANSMISSION OIL LEVEL	CHECK	1	SEE #19	
	5	PIVOT CYLINDER	LUBE	2	MIL-G-10924	ALL
	6	STEER AXLE	LUBE	4	MIL-G-10924	ALL
	7	TILT CYLINDERS	LUBE	4	MIL-G-10924	ALL
	8	SHIFT CYLINDER	LUBE	3	MIL-G-10924	ALL
250	9	SHIFT AND MAST CHAINS	LUBE	6	MIL-C-16173	ALL
	10	ENGINE COOLING FINS & COOLERS	CLEAN	6		
	11	FAN & ALTERNATOR BELTS	CHECK	2		
	12	BRAKE FLUID LEVEL	CHECK	1	SEE #29	
	13	SHIFT CAM ROLLERS	LUBE	2	MIL-G-10924	ALL
	14	MAST CHANNELS	LUBE	10	MIL-G-10924	ALL
	15	ENGINE CRANKCASE OIL & FILTER	CHANGE	1	MIL-L-46167-OEA MIL-L-2104-15W40	-65°F/40°F 0°F/120°F
		DRIVE AXLE OIL LEVEL	CHECK	3	SEE #21	
	16	PIVOT SHAFT BEARINGS	LUBE	2	MIL-G-10924	ALL
	17	MAST TRUNNIONS	LUBE	2	MIL-G-10924	ALL
	18	HYDRAULIC FILTER	CHANGE	1		
500	19	TRANSMISSION OIL & FILTER	CHANGE	1	MIL-L-2104-OE/HDO-10 MIL-L-2104-OE/HDO-30	-15°F/40°F 15°F/120°F
	20	FUEL FILTER	CHANGE	1		
	21	DRIVE AXLE OIL	CHANGE	1	M2105-X-75W M2105-X-80W90	-70°F/40°F -10°F/120°F
1000	22	FUEL TANK SEDIMENT	DRAIN	1		
	23	FORK LATCHES	LUBE	2	MIL-L-2104-OE/HDO-10	ALL
	24	HOOD LATCHES & HINGES	LUBE	4	MIL-L-2104-OE/HDO-10	ALL
	25	THROTTLE LINKAGE	LUBE	2	MIL-L-2104-OE/HDO-10	ALL
	26	HYDRAULIC TANK OIL	CHANGE	1	MIL-L-46167-OEA MIL-L-2104-OE/HDO-10	-65°F/40°F -15°F/120°F
	27	ENGINE VALVES	ADJUST	1		
2000	28	STEER WHEEL BEARINGS	LUBE	2	MIL-G-21164	ALL
	29	BRAKE FLUID	CHANGE	1	MIL-B-46176	ALL

Figure 2-2. Data plates and decals (sheet 6 of 7).

2-11. DECALS AND INSTRUCTION PLATES (CONT).

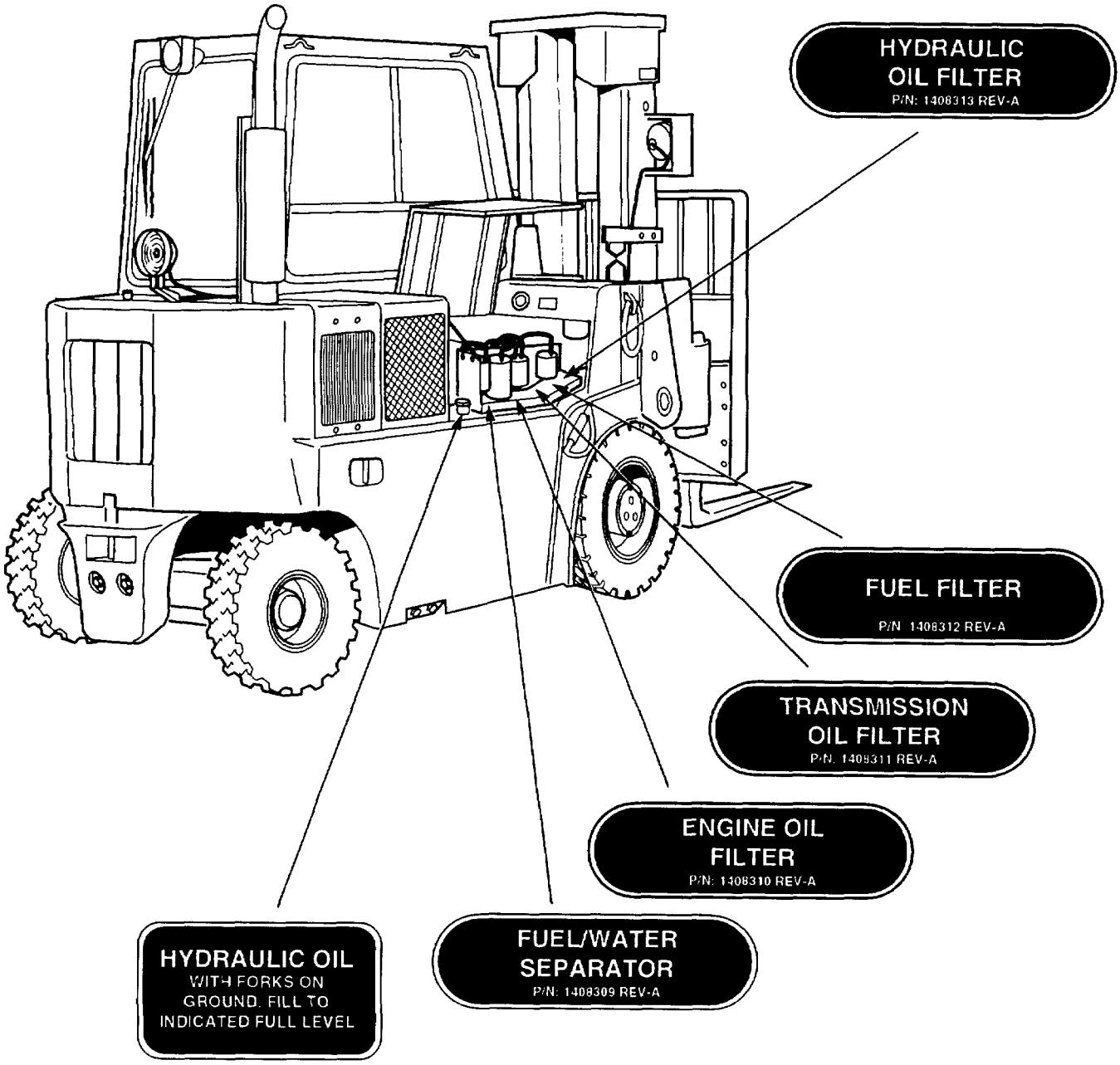

Figure 2-2. Data plates and decals (sheet 7 of 7).

Section IV. OPERATION UNDER UNUSUAL CONDITIONS

2-12. UNUSUAL ENVIRONMENT/WEATHER.

The forklift usually operates under conditions that are UNUSUAL for other forklifts. Operator PMCS instructions are designed to cover these conditions. However, operation in extreme heat, cold, or dust requires additional checks and services. The following paragraphs cover these conditions.

a. Operation in Extreme Heat.

CAUTION

- **Operating during periods of extreme heat [ambient temperatures above 100°F (38°C)] can cause the forklift engine and transmission systems to overheat. Engine temperatures above 250°F (121°C) and transmission fluid temperatures above 230°F (110°C) can cause damage to engine and transmission system components. Transmission fluid temperatures should be checked often during periods of extreme heat to prevent damage to engine and transmission system components.**

- **Gaskets and seals are more likely to leak when engine and transmission system operating temperatures are high. Engine and transmission fluid levels should be checked more often during periods of extreme heat to prevent damage to engine and transmission components. Checks for leaks around gaskets, seals, and fittings should also be made more often.**

(1) Check engine oil level (Para 3-6) and operating temperature often for system temperature above 250°F (121°C). If engine operating temperature is above 250°F (121°C), shut down forklift.

(2) Check transmission fluid level (Para 3-9) and operating temperature for system temperature above 230°F (110°C). If transmission operating temperature is above 230°F (110°C), shut down forklift.

(3) Perform operator PMCS more often than normal (Table 2-3).

b. Operation in Extreme Cold.

(1) Remove all snow and ice from forklift as soon as possible.

(2) Prepare forklift for operation in severe cold temperatures according to FM 9-207, FM 31-70, FM 31-71, and FM 21-305 as necessary.

2-12. UNUSUAL ENVIRONMENT/WEATHER (CONT).

(3) Drain fuel filter and fuel/water separator before filling fuel tank to prevent any water in fuel from freezing. This will also prevent fuel filter from clogging.

(4) Keep fuel tank as full as possible during cold operations.

(5) Press glow plug button and hold for 10 to 15 seconds. In severely cold weather 0° and below, increase glow plug time up to 60 seconds before attempting to start engine.

NOTE

If engine fails to start within 10 seconds, discontinue cranking and wait 15 seconds before next attempt to allow starter motor to cool. Repeat Step (5).

(6) Start engine (Para 2-10. d.) and allow it to warm up to normal operating temperature.

(7) Slowly raise and lower mast assembly to allow hydraulic fluid to warm up.

WARNING

Icy roads and surfaces are common during periods of severe cold. Care should be exercised when operating on icy surfaces. Sudden movements or lack of attention can cause accidents and injury or death to personnel.

(8) Operate forklift on icy surfaces as follows:

(a) Turn steering wheel right and left to allow hydraulic fluid in steering system to warm up. Do this until steering feels normal. This should be done with the forklift moving slowly to avoid creating flat spots on the tires.

(b) Avoid making sudden turns and stops.

(c) When slowing or stopping, pump brake pedal to avoid sliding.

(d) Begin stopping sooner than normal to avoid sliding.

(e) Steer away from ruts and snow banks.

(f) Steer forklift straight up and down grades when possible.

CAUTION

During periods of extreme cold, damage will occur if tires are allowed to freeze to the ground. If a sheltered area is not available when temperatures are forecast to be below 32°F (0°C), the forklift should be parked in a high, dry area.

(9) Park forklift in sheltered area out of wind. If a sheltered area is not available, park forklift so it does not face into wind.

(10) Drain water from fuel/water separator immediately after operating.

c. Operation in Extreme Dust or Sand.

NOTE

The forklift normally operates in non-dusty conditions and PMCS instructions are designed to handle these conditions. However, in deserts, dust conditions are more extreme and certain checks and services must be made more often than normal.

(1) Check air filter restriction indicator more often than normal to ensure air cleaner is not becoming clogged.

(2) Check fuel/water separator frequently for dust and sand, and drain as necessary.

(3) Watch all gauges in instrument panel more closely to ensure forklift is not affected by dusty conditions.

(4) Park forklift so it does not face into wind.

CAUTION

Blowing dust and sand can scratch glass surfaces. When the forklift is not being operated, glass surfaces must be covered for protection.

(5) Cover instrument panel, vacuum gauge, air restriction indicator, hydraulic fluid oil level indicator, fuel tank fill cap, and spotlights when forklift is parked for extended periods of time in extremely dusty conditions.

(6) Cover open space in fuel tank fill hole when adding fuel to tank.

2-13. EMERGENCY PROCEDURES.

If any emergency arises while operating the forklift, immediately stop any operation and shut off engine.

2-14. NUCLEAR, BIOLOGICAL, AND CHEMICAL (NBC) DECONTAMINATION PROCEDURES.

a. If attack is known or suspected, mask at once and continue mission. If inside forklift, stay there if possible.

b. If outside, brush fallout from skin, clothing, and equipment with available brushes and rags before going inside. Wash skin and have a radiation check made as soon as tactical situation permits.

c. Do not unmask until told to do so.

d. Detailed DECON procedures can be found in FM 3-3, FM 3-4, and FM 3-5.

CHAPTER 3

OPERATOR MAINTENANCE INSTRUCTIONS

Section I. LUBRICATION INSTRUCTIONS

3-1. GENERAL LUBRICATION INSTRUCTIONS.

CAUTION

Use only the type lubricants specified on current lubrication order and do not overlubricate. Over-lubrication may cause equipment failure or damage to working parts.

a. Refer to LO 10-3930-669-12.

b. Keep all lubricants in closed containers and store in a clean, dry area away from excessive heat. Do not allow dust, dirt, or other foreign matter to mix with the lubricants. Keep the lubrication equipment clean and ready for use. Before lubricating the equipment, wipe all lubrication points to remove dirt and grease. After lubricating, clean all lubrication points of any spilled or excessively applied lubricant to prevent accumulation of dirt and foreign matter. Keep all external surfaces and parts not requiring lubrication free of lubricants. Inspect all oil lines, fittings, and filters for leaks immediately after lubrication and during operation.

Section II. TROUBLESHOOTING PROCEDURES

3-2. OPERATOR TROUBLESHOOTING INTRODUCTION.

This section contains step-by-step procedures for identifying, locating, and isolating equipment malfunctions.

3-3. OPERATOR TROUBLESHOOTING SYMPTOMS.

Refer to Table 3-1 for a list of common malfunctions. Table 3-2 lists the test/inspection and corrective action required for each malfunction. Tests/inspections and corrective actions should be performed in the order listed. If a malfunction is not listed, or is not corrected by listed corrective actions, notify your supervisor.

Table 3-1. Operator Troubleshooting Symptom Index

Table 3-1. Operator Troubleshooting Symptom Index - CONT.

3-4. OPERATOR TROUBLESHOOTING PROCEDURES.

Table 3-2 contains the malfunctions listed in the Operator Troubleshooting Symptom Index (Table 3-1), test and inspection instructions required to determine the cause of the malfunction, and corrective actions for repairing equipment.

Table 3-2. Operator Troubleshooting Procedures

MALFUNCTION
TEST OR INSPECTION
CORRECTIVE ACTION

ENGINE

1. ENGINE WILL NOT CRANK.

Step 1. Check MAIN POWER switch position.

If MAIN POWER switch is not in the ON position, set switch to ON position.

If MAIN POWER switch is in the ON position, go to step 2.

Step 2. Check transmission control lever position.

If transmission control lever is not in the neutral position, set lever in the neutral position.

If transmission control lever is in the neutral position, go to step 3.

Step 3. Inspect battery cables.

If battery cables are damaged or disconnected, notify Unit Maintenance.

If battery cables are OK, notify Unit Maintenance.

Table 3-2. Operator Troubleshooting Procedures - CONT.

MALFUNCTION TEST OR INSPECTION CORRECTIVE ACTION

ENGINE (CONT)

2. ENGINE CRANKS BUT WILL NOT START.

Step 1. Check indication on fuel level gauge.

If fuel level gauge reads empty, refill fuel tank (para 3-8).

If fuel level gauge indicates there is fuel in the tank, go to step 3.

Step 2. Open fuel tank cap and visually check fuel level (Para 3-8).

If tank is empty, fill tank and notify Unit Maintenance that gauge does not work.

If tank is not empty, go to step 3.

Step 3. Inspect fuel lines and fittings.

If fittings are loose or fuel lines are damaged, notify Unit Maintenance.

If fittings and fuel lines are OK, go to step 4.

Step 4. Drain fuel/water separator (Para 3-11) and restart engine (Para 2-10. d.).

If engine still does not start, notify Unit Maintenance.

If fuel is OK, go to step 5.

WARNING

If NBC exposure is suspected, all air filter media should be handled by personnel wearing protective equipment. Consult your unit NBC officer or NBC NCO for appropriate handling or disposal procedures.

Step 5. Inspect air filter for clogging (Para 3-7).

If air filter is clogged, replace filter.

If air filter is OK, go to step 6.

Table 3-2. Operator Troubleshooting Procedures - CONT.

MALFUNCTION TEST OR INSPECTION CORRECTIVE ACTION

ENGINE (CONT)

Step 6. Perform cold start procedure (Para 2-12. b.).

If engine does not start, notify Unit Maintenance.

3. LOW ENGINE OIL PRESSURE.

Check oil level (Para 3-6).

If oil level is low, add oil (Para 3-6).

If oil level is OK, go to step 2, notify Unit maintenance.

4. ENGINE STARTS BUT WILL NOT KEEP RUNNING.

WARNING

If NBC exposure is suspected, all air filter media should be handled by personnel wearing protective equipment. Consult your unit NBC officer or NBC NCO for appropriate handling or disposal procedures.

Inspect air filter for clogging (Para 3-7).

If air filter is clogged, replace filter.

If air filter is OK, notify Unit Maintenance.

5. ENGINE EXHAUST SMOKES EXCESSIVELY.

Inspect air filter for clogging (Para 3-7).

If air filter is clogged, replace filter.

If air filter is OK, notify unit maintenance.

6. ENGINE OPERATING TEMPERATURE TOO HIGH.

Step 1. Check oil level (Para 3-6).

If oil level is low, add oil (Para 3-6).

If oil level is OK, go to step 2.

Table 3-2. Operator Troubleshooting Procedures - CONT.

MALFUNCTION TEST OR INSPECTION CORRECTIVE ACTION

ENGINE (CONT)

Step 2. Inspect blower belt.

If blower belt is frayed or missing, notify Unit Maintenance.

If blower belt is OK, notify Unit maintenance.

7. ENGINE DOES NOT DEVELOP FULL POWER OR IDLES ROUGH.

WARNING

If NBC exposure is suspected, all air filter media should be handled by personnel wearing protective equipment. Consult your unit NBC officer or NBC NCO for appropriate handling or disposal procedures.

Step 1. Inspect air filter for clogging (Para 3-7).

If air filter is clogged, replace filter.

If air filter is OK, go to step 2.

Step 2. Drain and inspect fuel in fuel/water separator (Para 3-11).

If fuel is contaminated, notify Unit Maintenance.

If fuel is OK, notify Unit maintenance.

ELECTRICAL SYSTEM

1. GAUGE LIGHTS DO NOT OPERATE.

Check front light switch.

If front light switch is not in the ON position, set switch to ON position.

If lights do not operate, check fuse 6.

If fuse is OK, notify Unit Maintenance.

Table 3-2. Operator Troubleshooting Procedures - CONT.

MALFUNCTION
TEST OR INSPECTION
CORRECTIVE ACTION

ELECTRICAL SYSTEM (CONT)

2. GLOW PLUG INDICATOR DOES NOT OPERATE.

Step 1. Check MAIN POWER switch position.

If MAIN POWER switch is not in the ON position, set switch to ON position.

If MAIN POWER switch is in the ON position, go to step 2.

Step 2. Depress glow plug button for 10 seconds and check glow plug indicator.

If glow plug indicator light does not operate, notify Unit Maintenance.

TRANSMISSION

1. TRANSMISSION SLIPS OR WILL NOT ENGAGE IN FORWARD.

Step 1. Check transmission oil level (Para 3-12).

If transmission oil level is low, add oil (Para 3-12).

If transmission oil level is OK, go to step 2.

Step 2. Check transmission in reverse.

If transmission will not engage in reverse, go to step 3.

If transmission will engage in reverse, notify Unit Maintenance.

Step 3. Set transmission speed switch to high position and check transmission high gear indicator light.

If transmission high gear indicator light does not operate, power to transmission electrical system is faulty. Notify Unit Maintenance.

If transmission high gear indicator light operates, transmission is faulty. Notify Unit Maintenance.

Table 3-2. Operator Troubleshooting Procedures - CONT.

MALFUNCTION
TEST OR INSPECTION
CORRECTIVE ACTION

TRANSMISSION (CONT)

2. TRANSMISSION WILL NOT ENGAGE IN FORWARD OR REVERSE.

Step 1. Set transmission speed switch to high position and check transmission high gear indicator light.

If transmission high gear indicator light does not operate, power to transmission electrical system is faulty. Notify Unit Maintenance.

If transmission high gear indicator light operates, go to step 2.

Step 2. Check transmission oil level (Para 3-12).

If transmission oil level is low, add oil (Para 2-12).

If transmission oil level is OK, notify Unit Maintenance.

3. TRANSMISSION WILL NOT ENGAGE IN HIGH GEAR.

Check transmission high gear indicator light.

If transmission high gear indicator light does not operate, power to transmission high range solenoid is faulty. Notify Unit Maintenance.

If transmission high gear indicator light operates, notify Unit Maintenance.

BRAKE SYSTEM

1. BRAKES DO NOT APPLY, APPLY SLOWLY, OR APPLY ABRUPTLY.

Inspect brake fluid level in master cylinder.

If brake fluid is low, add fluid (TM 10-3930-669-12).

If brake fluid is OK, notify Unit Maintenance.

2. BRAKES DO NOT RELEASE OR RELEASE SLOWLY.

Inspect brake linkage.

If brake linkage is damaged or binding, notify Unit Maintenance.

If brake linkage is OK, notify Unit Maintenance.

Table 3-2. Operator Troubleshooting Procedures - CONT.

MALFUNCTION
TEST OR INSPECTION
CORRECTIVE ACTION

BRAKE SYSTEM (CONT)

3. PARKING BRAKE DOES NOT RELEASE OR ENGAGE.

Adjust manual adjusting knob on parking brake lever and check parking brake (Para 3-10).

If parking brake does not release, notify Unit Maintenance.

If parking brake does not engage, notify unit Maintenance.

WHEELS

1. WHEEL(S) WOBBLE.

Step 1. Check wheel for loose, missing, or broken lugnuts.

If lugnuts are loose, missing, or broken, notify Unit Maintenance.

If lugnuts are OK, go to step 2.

Step 2. Check wheels for visible damage.

If wheel(s) are damaged, notify Unit Maintenance.

If wheels are OK, go to Steering System troubleshooting fault 2.

Table 3-2. Operator Troubleshooting Procedures - CONT.

MALFUNCTION
TEST OR INSPECTION
CORRECTIVE ACTION

STEERING SYSTEM

1. STEERING IS DIFFICULT OR DOES NOT RESPOND.

Check hydraulic oil level (Para 3-9).

If hydraulic oil level is low, add oil (Para 3-9).

If hydraulic oil level is OK, notify Unit Maintenance.

2. FORKLIFT SHIMMIES, WANDERS, OR PULLS TO ONE SIDE.

Check hydraulic steering cylinder for leakage and damage.

If steering cylinder is leaking or damaged, steering cylinder is faulty. Notify Unit Maintenance.

If steering cylinder is OK, notify Unit Maintenance.

HYDRAULIC SYSTEM

1. MAST DOES NOT OPERATE.

Check hydraulic oil level (Para 3-9).

If hydraulic oil level is low, add oil (Para 3-9).

If hydraulic oil level is OK, notify Unit Maintenance.

2. MAST DOES NOT PIVOT.

Step 1. Check mast tilt operation.

If mast will not tilt, tilt and pivot control valve is faulty. Notify Unit Maintenance.

If mast tilts, go to step 2.

Step 2. Inspect hydraulic pivot cylinder.

If pivot cylinder is damaged, notify Unit Maintenance.

If pivot cylinder is OK, go to step 3.

Table 3-2. Operator Troubleshooting Procedures - CONT.

MALFUNCTION TEST OR INSPECTION CORRECTIVE ACTION

HYDRAULIC SYSTEM (CONT)

Step 3. Inspect hydraulic hoses to pivot cylinder.

If hoses are damaged, notify Unit Maintenance.

If hoses are OK, notify Unit Maintenance.

3. MAST DOES NOT SHIFT.

Step 1. Check mast lift operation.

If mast lifts, go to step 2.

If mast does not lift, go to step 4.

Step 2. Inspect shift cylinder.

If shift cylinder is leaking or damaged, notify Unit Maintenance.

If shift cylinder is OK, go to step 3.

Step 3. Inspect hydraulic hoses to shift cylinder.

If hoses are damaged, notify Unit Maintenance.

If hoses are OK, notify Unit Maintenance.

Step 4. Check steering operation.

If forklift does not turn or turns slowly, notify Unit Maintenance.

If forklift steering is OK, notify Unit Maintenance.

Section III. MAINTENANCE PROCEDURES

3-5. OPERATOR MAINTENANCE INTRODUCTION.

This section covers authorized operator maintenance tasks. The tasks covered in this section are defined in the MAC and limited to the inspection and servicing of forklift components.

3-6. ENGINE OIL LEVEL CHECK AND SERVICE.

a. Engine Oil Level Check.

(1) Shut down forklift (Para 2-10. h.).

(2) Open cab door (1) and engine access panel (2).

CAUTION

Wait at least 5 minutes after shutting off the engine to allow oil to drain to bottom of engine before checking oil level.

(3) Remove oil dipstick (3) and wipe oil from dipstick (3).

(4) Insert dipstick (3) in dipstick tube (4).

(5) Remove dipstick (3) and check oil level. Oil level should be between add and full marks on dipstick (3).

(6) Add oil as necessary (Para 3-6. b.).

(7) Install dipstick (3) in dipstick tube (4).

(8) Close engine access panel (2) and cab door (1).

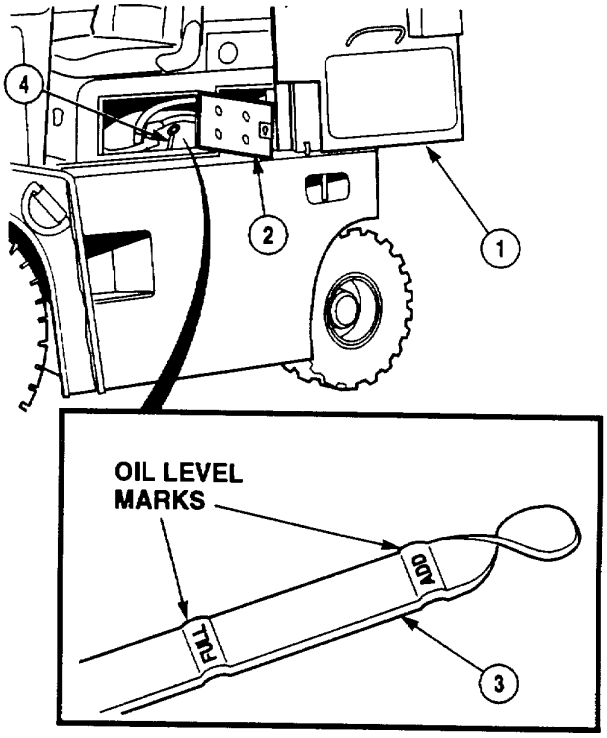

b. Engine Oil Level Service.

(1) Unlock two latches (1) and open left-side rear access cover (2) and remove oil fill cap (3) from engine (4).

CAUTION

Do not overfill crankcase with engine oil or serious damage will occur to engine.

(2) Add oil according to Lubrication Order (LO 10-3930-669-12) as necessary.

(3) Install oil fill cap (3) on engine (4).

(4) Check crankcase oil level (Para 3-6. a.).

(5) Close left-side rear access cover (2) and lock two latches (1).

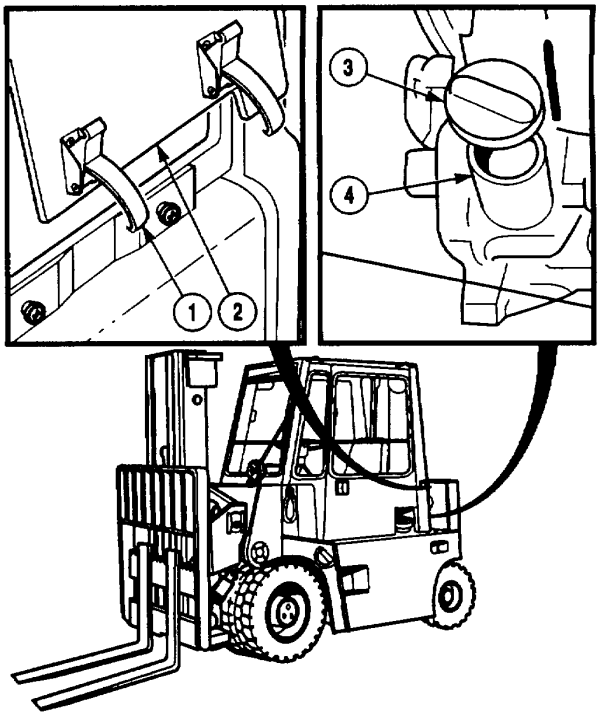

3-7. AIR FILTER INSPECTION AND SERVICE.

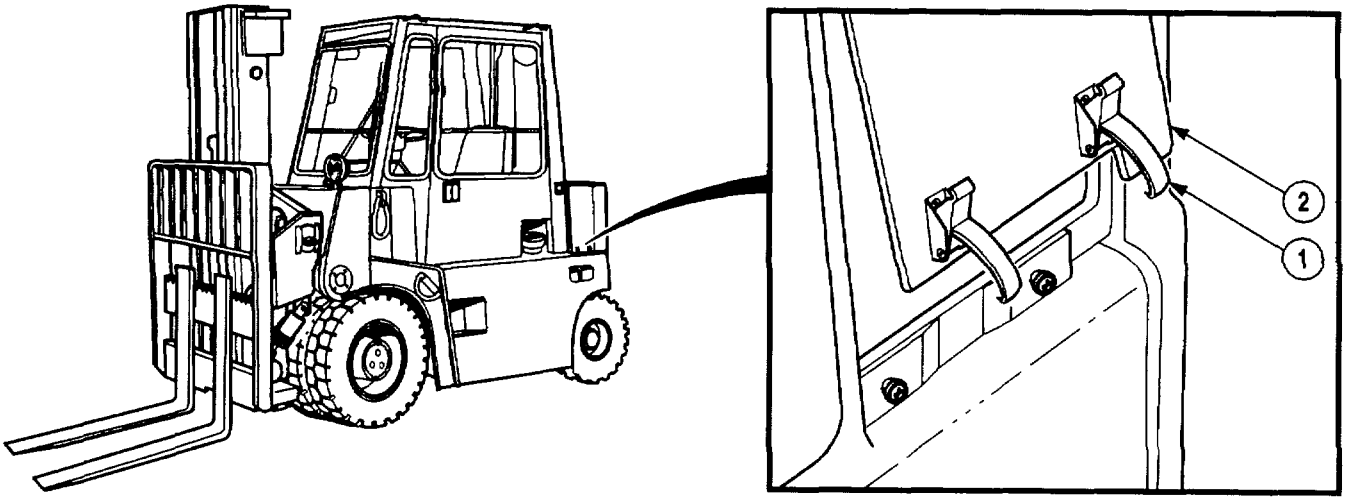

a. Removal.

WARNING

If NBC exposure is suspected, all air filter media should be handled by personnel wearing protective equipment. Consult your unit NBC Officer or NBC NCO for appropriate handling or disposal procedures.

(1) Shut down forklift (Para 2-10. h.).

(2) Unlock two latches (1) and open left-side rear access cover (2).

(3) Turn screw (3) to loosen clamp (4) and remove cover (5) from air filter housing (6).

(4) Remove baffle (7) from air filter housing (6).

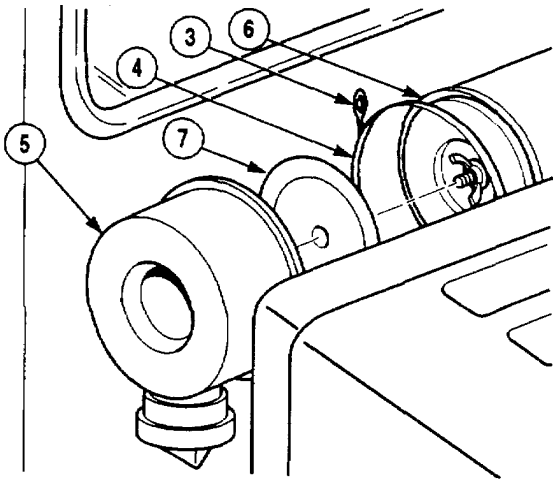

(5) Remove wing nut (8) and air filter (9) from air filter housing (6).

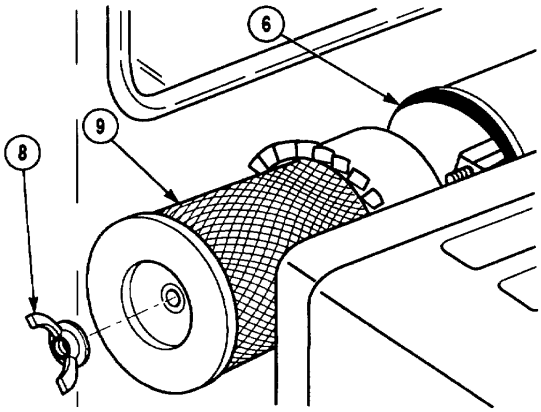

b. Cleaning/Inspection.

(1) Hold air filter (9) up to light.

(2) If light is dim or cannot be seen through air filter (9), replace filter.

(3) If light can be seen through air filter (9), install filter.

c. Installation.

(1) Install air filter (9) in air filter housing (6) with wing nut (8).

(2) Install baffle (7) in air filter housing (6).

(3) Install cover (5) with clamp (4) and tighten screw (3).

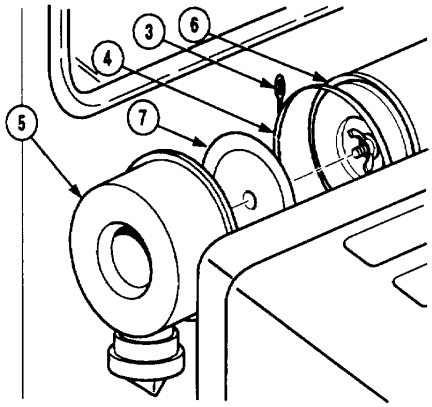

(4) Close left-side rear access panel (2) and lock two latches (1).

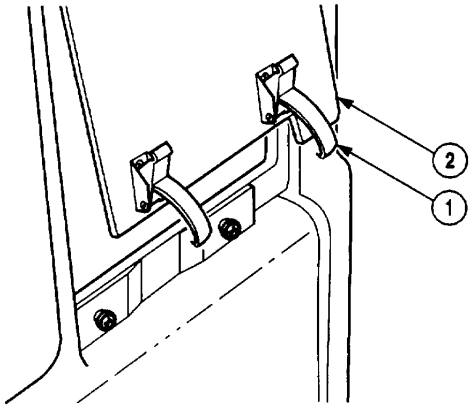

3-8. FUEL LEVEL CHECK AND SERVICE.

a. Fuel Level Check and Service.

(1) Shut down forklift (Para 2-10. h.).

(2) Check fuel level gauge (1) for fuel level.

(3) Add fuel as necessary (Para 3-8. b.).

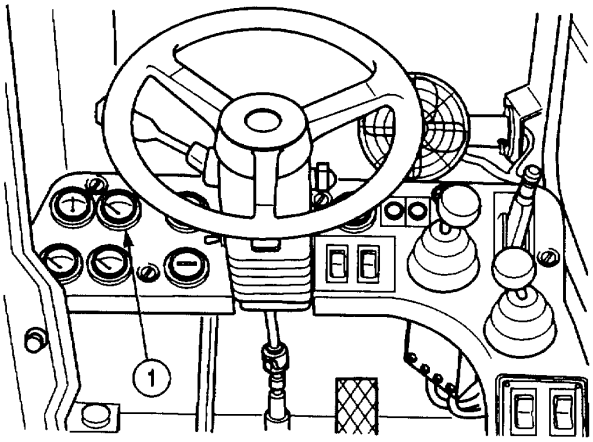

b. Refueling Procedures.

WARNING

• Do not fill tank with engine running, while smoking, or when near an open flame. Never overfill the tank or spill fuel. If fuel is spilled, clean it up immediately.

• Be sure to use correct type and grade of fuel.

• Ground fuel funnel or nozzle against filler neck to prevent sparks and be sure to replace fuel tank cap.

(1) Shut down forklift (Para 2-10. h.).

(2) Set parking brake (Table 2-1, 2).

(3) Open fuel tank cap (1).

(4) Ground funnel or nozzle against mouth of filler hole (2) and fill fuel tank (3).

(5) Close fuel tank cap (1) securely.

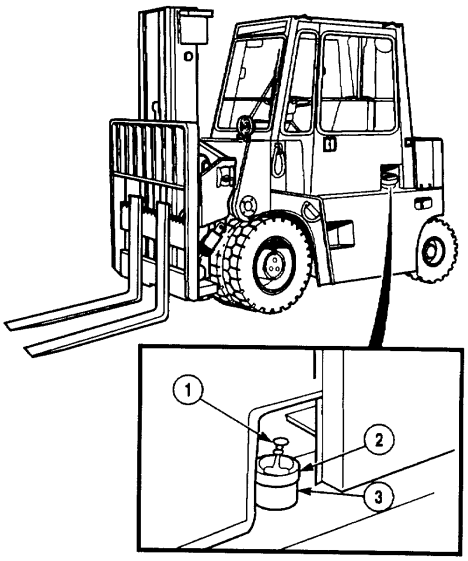

3-9. HYDRAULIC OIL LEVEL CHECK AND SERVICE.

Hydraulic Oil Level Check and Service.

(1) Shut down forklift (Para 2-10. h.).

(2) Open right-hand engine access cover (1).

WARNING

Use caution when removing cap on hydraulic tank, cap pressure is 5 to 6 pounds.

(3) Remove cap (2). Oil must be in contact with bottom of strainer.

(4) Add hydraulic oil according to Lubrication Order (LO 10-3930-669-12) as necessary.

(6) Install cap (2) securely.

(7) Close right-side engine access cover (1).

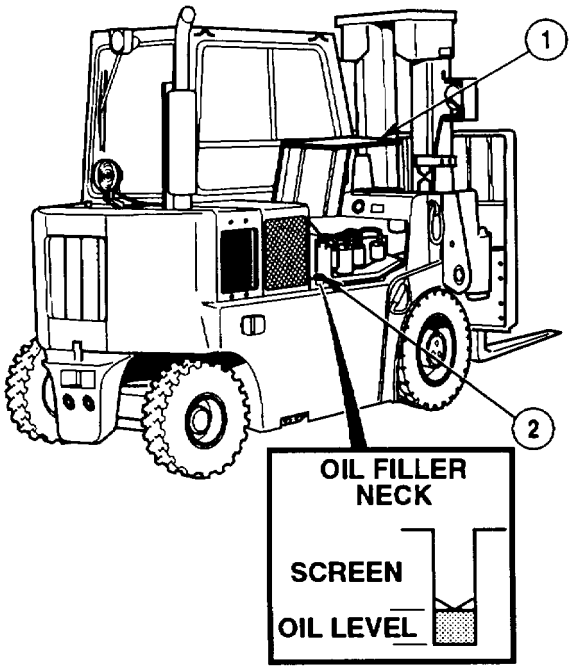

3-10. PARKING BRAKE ADJUSTMENT AND CHECK.

a. Parking Brake Adjustment.

WARNING

If the parking brake does not set correctly, the forklift can roll into personnel and/or equipment and cause serious injury and damage. When the brake lever is pulled up and back, it should feel tight.

(1) Open cab door (1).

(2) Push parking brake lever (2) forward and down to release brake.

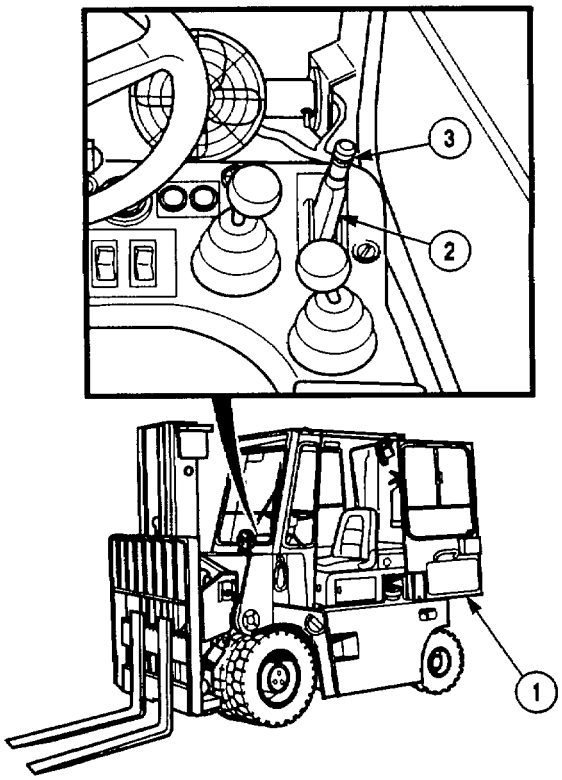

3-10. PARKING BRAKE ADJUSTMENT AND CHECK (CONT).

CAUTION

Do not overtighten brake adjusting knob or damage to equipment will result.

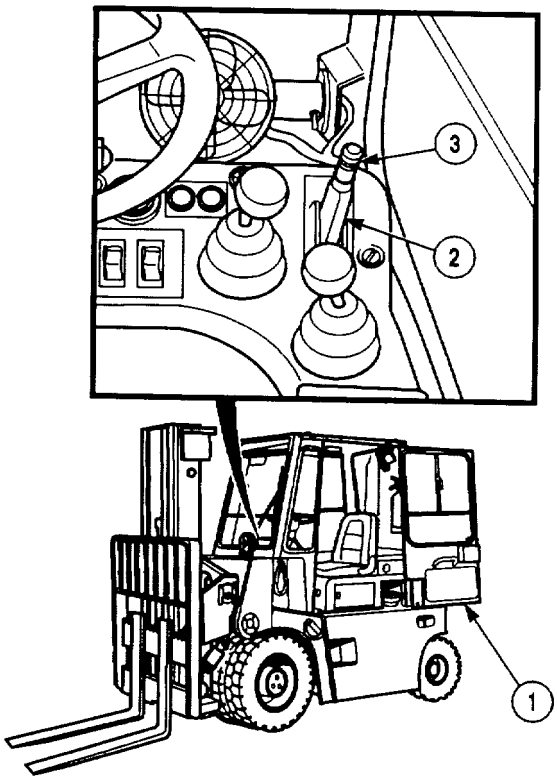

(3) Turn adjusting knob (3) clockwise to tighten brake cable tension or counterclockwise to release the brake cable tension.

(4) Pull up and back on parking brake lever (2) to set brake cable tension. Repeat Steps (1) and (2) as necessary until brake cable tension is correct.

(5) Close cab door (1).

b. Parking Brake Test.

(1) Start engine (Para 2-10. d.).

(2) Place transmission control lever in forward low gear (Para 2-10. e.). At low travel speed apply the parking brake. Fork lift should come to a rapid stop. If forklift does not come to a rapid stop, release parking brake and turn knob clockwise. Retest.

(3) Shut down forklift (Para 2-10. h.).

3-11. FUEL/WATER SEPARATOR SERVICE.

Fuel/Water Separator Service.

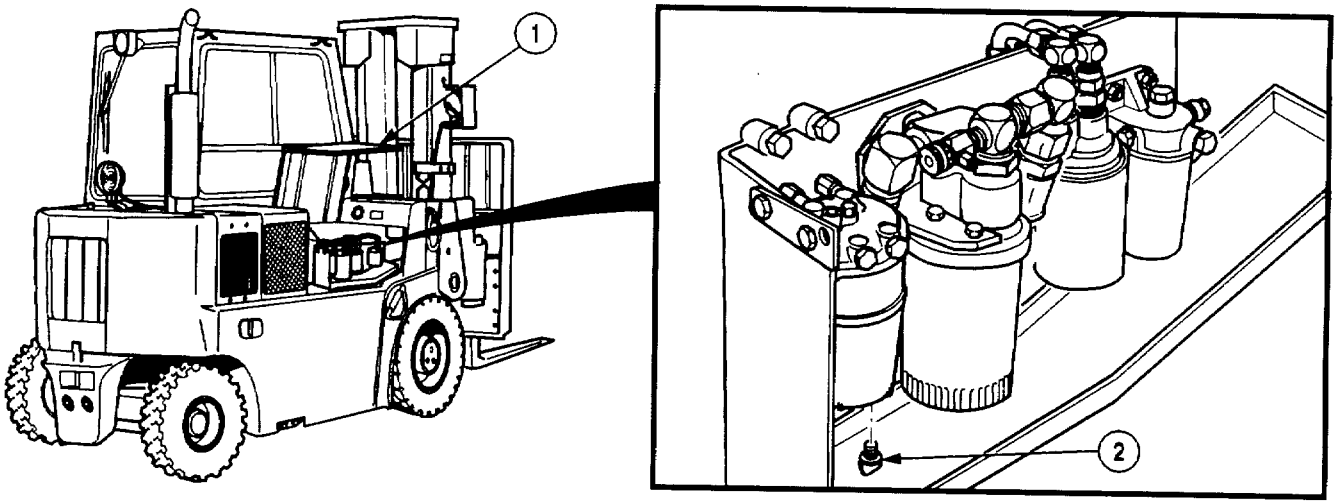

(1) Open right-hand engine access cover (1).

(2) Open drain valve (2) and drain water into a suitable container.

(3) Close drain valve (2).

(4) Close right-hand engine access cover (1).

3-12. TRANSMISSION OIL LEVEL CHECK.

Transmission Oil Level Check.

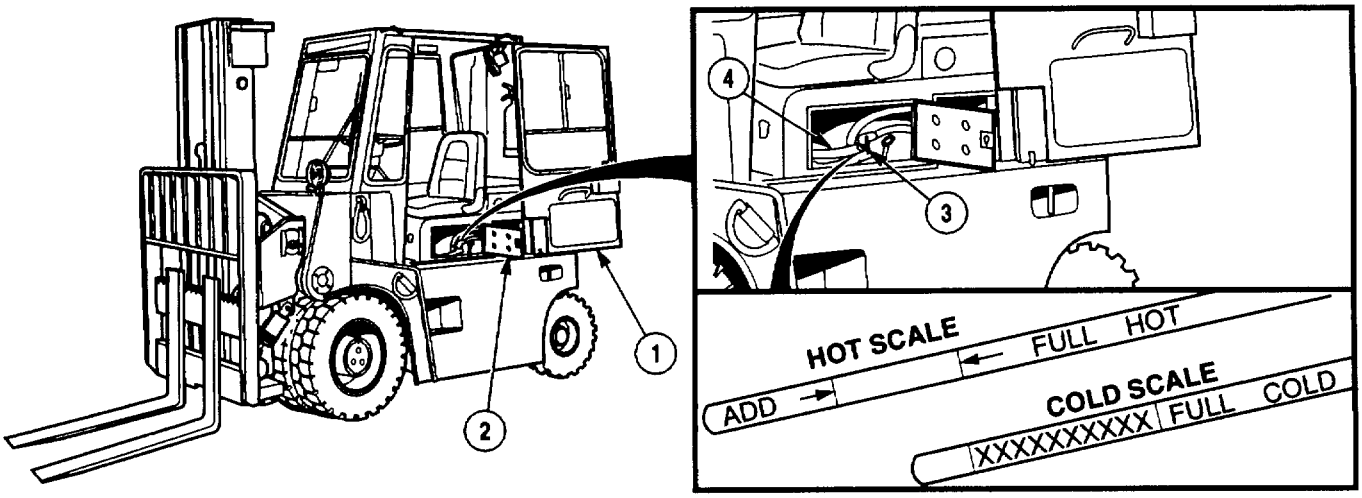

CAUTION f

- **Transmission oil level must be checked while engine is running or oil level shown on dipstick may not reflect actual oil level in transmission.**
- **Transmission oil level must be checked when transmission is between 100 and 200'F (38-93°C) or oil level shown on dipstick may not reflect actual oil level in transmission.**

NOTE

The transmission dipstick has two scales; hot and cold. Use the cold scale for "Before" PMCS checks and the hot scale at all other times.

(1) Open cab door (1) and engine access panel (2).

(2) Remove transmission dipstick (3) from transmission dipstick tube (4).

(3) Wipe oil from transmission dipstick (3).

(4) Check oil level. Oil level should be between ADD and FULL marks on transmission dipstick (3).

(5) If oil level is not within proper range, add oil according to Lubrication Order (LO 10-3930-669-12) as necessary.

(6) Install transmission dipstick (3) into transmission dipstick tube (4).

(7) Close engine access panel (2) and cab door (1).

3-13. FORK REPLACEMENT/ADJUSTMENT.

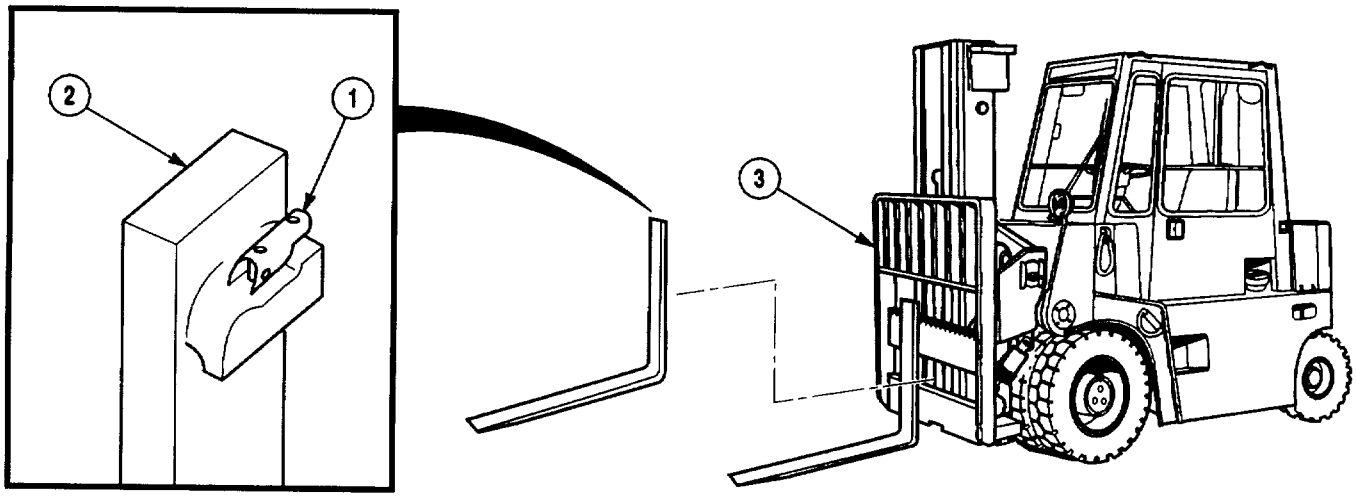

a. Removal.

(1) Unlock latch (1) on fork (2).

WARNING

Fork weighs 86 lbs (39 kg). Do not remove without aid from an assistant or personnel injury may result.

NOTE

Forks must be removed from the center of the carriage. Bottom rung on carriage is slotted for removal and installation.

(2) With the aid of an assistant, remove fork (2) from carriage (3).

b. Installation.

CAUTION

Do not drop forks against carriage. Install forks on carriage easily. Failure to do so will result in mast chain slack, which can cause the chain(s) to fall out of the sheave(s).

(1) With the aid of an assistant, install fork (2) on carriage (3).

(2) Lock latch (1) on forks (2).

c. Adjustment.

(1) Unlock latch (1) on fork (2).

(2) Position fork (2) on carriage (3) to required position.

(3) Lock latch (1) on forks (2).

APPENDIX A

REFERENCES

A-1. SCOPE.

Indexes should be consulted frequently for latest changes or revisions given in this appendix and for new publications relating to material covered in this publication.

Military Publication Indexes.

Consolidated of Army Publications and Forms ..... DA PAM 310-1

A-2. FORMS.

Refer to DA PAM 738-750, of the Army Maintenance Management System (TAMMS), for instructions on the use of maintenance forms pertaining to the forklift.

A-3. FIELD MANUALS.

The following publications contain information pertinent to the forklift material.

Camouflage ..... FM 5-20

Basic Cold Weather Manual ..... FM 31-70

Manual for Wheel Vehicle Driver ..... FM 21-305

Army Motor Transport Units and Operations ..... FM 55-30

Northern Operations..... FM 31-71

Operation and Maintenance of Ordnance Material in Cold Weather 0°F to -65°F ..... FM 9-207

Nuclear, Biological, and Chemical Defense..... FM 21-40

Nuclear, Biological, and Chemical (NBC) Reconnaissance and Decontamination

Operations (How to Fight) ..... FM 3-87 (HTF)

A-4. TECHNICAL MANUALS.

Administrative Storage of Equipment ..... TM 740-90-1

Chemical, Biological, and Radiological (CBR) Decontamination..... TM 3-220

Inspection, Care, and Maintenance of Anti-friction Bearings ..... TM 9-214

A-4. TECHNICAL MANUALS (CONT).

Painting Instructions ..... TM 43-0139

Materials Used for Cleaning, Preserving, Abrading, and Cementing

Ordnance Material and Related Materials Including Chemicals ..... TM 9-247

Operator's Manual for Welding Theory and Application ..... TM 9-237

Procedures for Destruction of Tank Automotive to Prevent

Enemy Use (U.S. Army Tank-automotive and Armaments Command) ..... TM 750-244-6

Maintenance and Repair for Lead-Acid Storage Batteries ..... TM 9-6140-200-14

General Shop Practice Requirements for Repair, Maintenance, and

Test of Electronic Equipment ..... TM 43-0158

A-5. MISCELLANEOUS PUBLICATIONS.

Description, Use, Bonding, and Properties of Adhesives ..... TB ORD1032

A-6. WARRANTY.

The 6K Fork Lift is not covered by the standard government warranty provisions associated with some TACOM managed equipment.

It is highly recommended that prior to any work being initiated or repair parts requested, Drexel be notified of such actions to ensure that no work and/or repairs are requested that are not covered under warranty.

Any cost associated with work and/or repairs accomplished by Drexel that is not covered under warranty, shall be the sole responsibility of the using Army unit.

This warranty is to be exercised between the using Army unit and Drexel.

Warranty registration of the ARMY equipment with Drexel is NOT required and it is NOT necessary to notify the Tank-automotive and Armaments Command (TACOM) regarding warranty claim submission.

The local Warranty Control Office/Officer (WARCO) should pursue warranty coverage by administering the guidelines prescribed within the Drexel Commercial Warranty.

For information regarding this warranty, please contact:

Drexel Industries, Inc.
331 Maple Avenue
P.O. Box 248
Horsham, PA 19044

Phone (215) 672-2200
Fax (215) 773-6765

DREXEL

DREXEL INDUSTRIES, INC.

LIMITED WARRANTY

Drexel Industries, Inc. ("Drexel") warrants to the original purchaser that all equipment sold by Drexel will be free of defects in material or workmanship upon delivery and will remain so, under normal and proper use and maintenance, throughout the warranty period.

This warranty commences on the day of delivery of the equipment to the original purchaser and will remain in effect for a period of ninety (90) days or five hundred (500) hours of operation (whichever occurs first). During this period, Drexel will repair or replace, at its discretion, any items determined by Drexel to be defective. Normal maintenance items including, but not limited to, fuses, filters, belts, tune-up parts, grease oil and minor adjustments are not covered.

There shall be extended, parts only, coverage for twelve (12) months from date of delivery or two thousand (2,000) hours of operation (whichever occurs first) on engines (excluding fuel system and electrical parts), transmission, drive motors, pump motors, power steering motors, drive axles (excluding brake assemblies), pumps, valves, contractors (excluding tips) and solid state drive control components.

There shall be extended, parts only, coverage for thirty six (36) months, from date of delivery, or five thousand (5,000) hours (whichever occurs first), for Drexel SwingMast® models, on the pivot/side shift assembly (excluding hydraulic cylinders and hoses, electric wiring and wear pads).

Drexel's warranty does not apply to batteries, chargers, tires, or other accessories or attachments, not manufactured by Drexel, which may be delivered with or installed on Drexel trucks and which are warranted by their respective manufacturers. Damage or defects resulting from misuse, abuse, negligence, accident or any action not originating in the manufacture of the equipment is not covered. Hauling charges and freight charges on parts are not covered.

The warranty set forth herein is complete, exclusive, and in lieu of all other warranties, expressed or implied, by operation of law or otherwise, including, without limitation, any warranty of merchantability or fitness for a particular purpose. The right to repair, replace or provide replacement parts is the sole and exclusive remedy for each breach of this warranty, and Drexel shall not be liable for any damages, whether direct, consequential, or otherwise, resulting from any such breach.

APPENDIX B

COMPONENTS OF END ITEM AND BASIC ISSUE ITEMS LIST

The Forklift does not have any Components of End Item (COEI) or Basic Issue Items (BII).

APPENDIX C

ADDITIONAL AUTHORIZATION LIST

Section I. INTRODUCTION

C-1. SCOPE.

This appendix lists additional items you are authorized for the support of the Forklift.

C-2. GENERAL.

The list identifies items that do not have to accompany the Forklift and that do not have to be turned in with it. These items are all authorized by CTA, MTOE, TDA, or JTA.

C-3. EXPLANATION OF LISTING.

National stock numbers, descriptions, and quantities are provided to help you identify and request the additional items you
require to support this equipment. The items are listed in alphabetical sequence by item name under the type of document
(e.g., CTA, MTOE, TDA, or JTA) which authorizes the item(s) to you.

Section II. ADDITIONAL AUTHORIZATION LIST

(1) National Stock Number	(2) Description CAGEC & Part Number	Usable on Code	(3) U/M	(4) Qty Auth
4210-00-889-2221	16236CS4210-0009CEFN	Extinguisher, Fire, Dry Chemical		1

APPENDIX D

EXPENDABLE/DURABLE SUPPLIES AND MATERIALS

Section I. INTRODUCTION

D-1. SCOPE.

This appendix lists expendable/durable supplies and materials you will need to operate and maintain the Forklift. This listing is for informational purposes only and is not authority to requisition the listed items. These items are authorized to you by CTA 50-970, Expendable/Durable Items (Except Medical, Class V, Repair Parts, and Heraldic Items), or CTA 8-100, Army Medical Department Expendable/Durable Items.

D-2. EXPLANATION OF COLUMNS.

a. Column (1) - Item Number. This number is assigned to the entry in the listing and is referenced in the narrative instructions to identify the material (e.g., "Use cleaning compound, Item 5, Appendix D").

b. Column (2) - Level. This column identifies the lowest level of maintenance that requires the listed item.

C - Operator/Crew
O - Organizational Maintenance
F - Direct Support Maintenance
H - General Support Maintenance

c. Column (3) National Stock Number. This is the National Stock Number assigned to the item; use it to request or requisition the item.

d. Column (4) Description. Indicates the Federal item name, and, if required, a description to identify the item. The last line for each item indicates the part number followed by Commercial And Government Entity (CAGE) Code in parentheses.

e. Column (5) Unit of Measure (U/M). Indicates the measure used in performing the actual maintenance function. This measure is expressed by two-character alphabetical abbreviations (e.g., ea, in, pr). If the unit of measure differs from the unit of issue, requisition the lowest unit of issue that will satisfy your requirements.

Section II. EXPENDABLE/DURABLE SUPPLIES AND MATERIALS LIST

(1) Item Number	(2) Level	(3) National Stock Number	(4) Description	(5) U/M
1	C,O	9150-01-102-9455	Fluid, Brake, Silicone: BFS (MIL-B-46176A) 1-gal can	gal
2	C,O	9150-01-091-9336	Grease, General Purpose, Lithium Base 1-1/2-lb can	lb
3	C,O,F	9150-01-152-4117	Lubricating Oil, Internal combustion engine, tactical service, MIL-L-2104 (OE/HDO 15W/40)	qt
4	C,O,F	9150-01-040-2236	Lubricating Oil, Internal combustion engine, tactical service, MIL-L-2104C (OE/HDO 10W/30)	qt
5	C,O,F	9150-00-186-6681	Lubricating Oil, Internal combustion engine, tactical service, MIL-L-2104C (OE/HDO 30)	qt
6	C	9150-00-189-6727	Lubricating Oil, Internal combustion engine, tactical service, MIL-L-2104C (OE/HDO 10)	gl
7	C,O		Lubricating Oil, OEA Ice, Arctic (MIL-L-46167)	
		9150-00-402-4478	1-qt can	qt
		9150-00-402-2372	5-gal can	gal
		9150-00-491-7197	55-gal drum	gal
8	O	7920-00-205-3570	Rags, Wiping (58536) A-A-531 50 Pound Bale	lb
9	C,O,F	6850-00-281-3061	Solvent, Dry Cleaning P-D-680 4-oz can (81348)	oz

ALPHABETICAL INDEX

ALPHABETICAL INDEX (CONT)

ALPHABETICAL INDEX (CONT)

By Order of the Secretary of the Army:

Official

JOEL B. HUDSON
Administrative Assistant to the
Secretary of the Army
03047

DENNIS J. REIMER
General, United States Army
Chief of Staff

DISTRIBUTION:
To be distributed in accordance with the initial distribution number (IDN) 256306, requirements for TM 10-3930-669-10.

☆U.S. GOVERNWNT PRINTING OFFICE: 1997-545-010/60043

THE METRIC SYSTEM AND EQUIVALENTS

LINEAR MEASURE

1 Centimeter = 10 Millimeters = 0.01 Meters = 0.3937 Inches

1 Meter = 100 Centimeters = 1,000 Millimeters = 39.37 Inches

1 Kilometer = 1,000 Meters = 0.621 Miles

SQUARE MEASURE

1 Sq Centimeter = 100 Sq Millimeters = 0.155 Sq Inches

1 Sq Meter = 10,000 Sq Centimeters = 10.76 Sq Feet

1 Sq Kilometer = 1,000,000 Sq Meters = 0.386 Sq Miles

CUBIC MEASURE

1 Cu Centimeter = 1,000 Cu Millimeters = 0.06 Cu Inches

1 Cu Meter = 1,000,000 Cu Centimeters = 35.31 Cu Feet

LIQUID MEASURE

1 Milliliter = 0.001 Liters = 0.0338 Fluid Ounces

1 Liter = 1,000 Milliters = 33.82 Fluid Ounces

TEMPERATURE

5/9 (°F -32) = °C

212° Fahrenheit is equivalent to 100° Celsius

90° Fahrenheit is equivalent to 32.2° Celsius

32° Fahrenheit is equivalent to 0° Celsius

9/5 C° +32 = F°

WEIGHTS

1 Gram = 0.001 Kilograms = 1,000 Milligrams = 0.035 Ounces

1 Kilogram = 1,000 Grams = 2.2 Lb.

1 Metric Ton = 1,000 Kilograms = 1 Megagram = 1.1 Short Tons

APPROXIMATE CONVERSION FACTORS

TO CHANGE	TO	MULTIPLY BY
Inches	Centimeters	2.540
Feet	Meters	0.305
Yards	Meters	0.914
Miles	Kilometers	1.609
Square Inches	Square Centimeters	6.451
Square Feet	Square Meters	0.093
Square Yards	Square Meters	0.836
Square Miles	Square Kilometers	2.590
Acres	Square Hectometers	0.405
Cubic Feet	Cubic Meters	0.028
Cubic Yards	Cubic Meters	0.765
Fluid Ounces	Milliliters	29.573
Pints	Liters	0.473
Quarts	Liters	0.946
Gallons	Liters	3.785
Ounces	Grams	28.349
Pounds	Kilograms	0.454
Short Tons	Metric Tons	0.907
Pound-Feet	Newton-Meters	1.356
Pounds Per Square Inch	Kilopascals	6.895
Miles Per Gallon	Kilometers Per Liter	0.425
Miles Per Hour	Kilometers Per Hour	1.609

TO CHANGE	TO	MULTIPLY BY
Centimeters	Inches	0.394
Meters	Feet	3.280
Meters	Yards	1.094
Kilometers	Miles	0.621
Square Centimeters	Square Inches	0.155
Square Meters	Square Feet	10.764
Square Meters	Square Yards	1.196
Square Kilometers	Square Miles	0.386
Square Hectometers	Acres	2.471
Cubic Meters	Cubic Feet	35.315
Cubic Meters	Cubic Yards	1.308
Milliliters	Fluid Ounces	0.034
Liters	Pints	2.113
Liters	Quarts	1.057
Liters	Gallons	0.264
Grams	Ounces	0.035
Kilograms	Pounds	2.205
Metric Tons	Short Tons	1.102
Newton-Meters	Pound-Feet	0.738
Kilopascals	Pounds Per Square Inch	0.145
Kilometers Per Liter	Miles Per Gallon	2.354
Kilometers Per Hour	Miles Per Hour	0.621

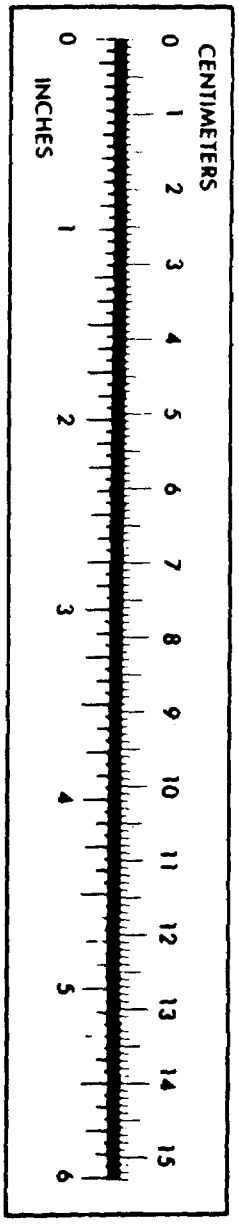

RECOMMENDED CHANGES TO EQUIPMENT TECHNICAL PUBLICATIONS

THEN...JOT DOWN THE DOPE ABOUT IT ON THIS FORM. CAREFULLY TEAR IT OUT, FOLD IT AND DROP IT IN THE MAIL.

SOMETHING WRONG WITH PUBLICATION

FROM: (PRINT YOUR UNIT'S COMPLETE ADDRESS)

DATE SENT

PUBLICATION NUMBER	PUBLICATION DATE	PUBLICATION TITLE

BE EXACT PIN-POINT WHERE IT IS

PAGE NO.	PARA-GRAPH	FIGURE NO.	TABLE NO.

IN THIS SPACE, TELL WHAT IS WRONG AND WHAT SHOULD BE DONE ABOUT IT.

PRINTED NAME, GRADE OR TITLE AND TELEPHONE NUMBER	SIGN HERE

TEAR ALONG PERFORATED LINE

DA FORM 1 JUL 79 2028-2

PREVIOUS EDITIONS ARE OBSOLETE.

P.S.--IF YOUR OUTFIT WANTS TO KNOW ABOUT YOUR RECOMMENDATION MAKE A CARBON COPY OF THIS AND GIVE IT TO YOUR HEADQUARTERS.

PIN: 075230-000

This fine document...

Was brought to you by me:

Liberated Manuals -- free army and government manuals

Why do I do it? I am tired of sleazy CD-ROM sellers, who take publicly available information, slap “watermarks” and other junk on it, and sell it. Those masters of search engine manipulation make sure that their sites that sell free information, come up first in search engines. They did not create it... They did not even scan it... Why should they get your money? Why are not letting you give those free manuals to your friends?

I am setting this document FREE. This document was made by the US Government and is NOT protected by Copyright. Feel free to share, republish, sell and so on.

I am not asking you for donations, fees or handouts. If you can, please provide a link to liberatedmanuals.com, so that free manuals come up first in search engines:

<A HREF=http://www.liberatedmanuals.com/>Free Military and Government Manuals</A>

- Sincerely
  Igor Chudov
  http://igor.chudov.com/
- Chicago Machinery Movers