TM 10-3930-630-34

TECHNICAL MANUAL

DIRECT SUPPORT AND GENERAL SUPPORT MAINTENANCE MANUAL FOR TRUCK, LIFT, FORK GED, SOLID RUBBER TIRED WHEELS, 4000 LBS CAPACITY 100 AND 180 INCH LIFT

ARMY MODEL MHE-231

ALLIS CHALMERS MODELS ACC40-24PS100 and ACC40-24PS180

(NSN 3930-00-490-7814) (100 IN.)

(NSN 3930-00-556-4955) (180 IN.)

HEADQUARTERS, DEPARTMENT OF THE ARMY

MAY 1978

WARNING
EXPLOSIVE GASES

When servicing the battery, do not smoke or use a flame in the vicinity. Batteries generate hydrogen, a highly explosive gas.

WARNING
MOVING MACHINERY

Check the operating area to be sure that it is clear of personnel and obstructions.

Do not shift the forward and reverse control lever while the truck is in motion.

Do not operate the truck with the load in a highly elevated position.

When operating the truck, the mast must be tilted backwards slightly to prevent the load from falling off.

Make sure that the forks are lowered to the ground when the truck is parked. Check parking brake for proper operation and engagement.

If the truck is parked on an incline, block at least two wheels to prevent the truck from moving in the event of a parking brake failure.

Do not attempt to work on truck when engine is operating, except for certain tests procedures outlined in this manual.

WARNING
DANGEROUS CHEMICALS

Cleaning solvent, (Fed. Spec. P-D-680) is a potentially DANGEROUS CHEMICAL.. Do not use near open flame. Flash point of solvent is 100°F to 138° F (38°C to 59°C).

WARNING
AIR UNDER PRESSURE

Compressed air used for cleaning purposes will not exceed 30 psi. Use only with effective chip guards and personnel protective equipment (goggles, shields, gloves, etc.).

WARNING
BURN HAZARD

Always disconnect the battery negative cable before attempting any removal or repair of electrical components.

Allow engine to cool for a sufficient period before attempting any removal or repair.

TECHNICAL MANUAL
No. 10-3930-630-34

HEADQUARTERS
DEPARTMENT OF THIE ARMY
WASHINGTON, DC, *9 May 1978*

DIRECT SUPPORT AND GENERAL SUPPORT MAINTENANCE MANUAL FOR TRUCK, LIFT, FORK, GED, SOLID RUBBER TIRED WHEELS, 4000 LBS CAPACITY, 100 AND 180 INCH LIFT ARMY MODEL MHE-231, ALLIS CHALMERS MODELS ACC40-24PS100 AND ACC40-24PS180; (NSN 3930-00-490-7814) (100 IN), (NSN 3930-00-556-4955) (180 IN)

REPORTING OF ERRORS

You can help improve this manual by calling attention to errors and by recommending improvements and stating your reasons for the Recommendations. Your letter of DA Form 2028 (Recommended Changes to Publications and Blank Forms) should be mailed directly to Commander, US Army Tank-Automotive Materiel Readiness Command, ATTN: DRSTA-MBA, WARREN, MI 48090. A reply will be furnished direct to you.

For your convenience, preaddressed DA Forms 2028-2 are included as final pages of this manual.

LIST OF ILLUSTRATIONS

LIST OF TABLES

CHAPTER 1
INTRODUCTION

Section I. GENERAL

1-1. Scope

This manual contains information necessary for the Maintenance of Truck, Lift, Fork, Solid Rubber Tired Wheels, 4000 pound capacity by Direct Support and General Support Maintenance personnel as allocated by the Maintenance Allocation Chart.. The manual provides information on the maintenance of the equipment which is beyond the scope of tools, equipment,
personnel or supplies normally available to Operator and Organizational Maintenance.

1-2. Maintenance Forms and Records

Maintenance Forms and Records that are required for use are explained in TM 38-750.

1-3. Equipment Serviceability Criteria

This equipment is not covered by an ESC.

1-4. Destruction of Army Material to Prevent Enemy Use

Procedures to be used for destruction of equipment to prevent enemy use are defined in TM 750-244-3.

1-5. Administrative Storage

Refer to TM 740-90-1 for instructions pertaining to administrative storage of the fork lift truck.

Section II. DESCRIPTION

1-6. Description

A general description of the Fork Lift Truck and information pertaining to identification plates are contained in TM 10-3930-630-12. A more detailed description of components and assemblies is contained in the applicable sections of this manual.

1-7. Differences in Models

Two models of the fork lift truck are covered in this manual, Allis-Chalmers models ACC40-24PS100 and ACC40-24PS180. The only difference between the two is the mast and lift cylinders. The ACC40-24PS100 can lift 4,000 pounds (1812.0 kg) to a height of 100 inches (2540.0 mm), employs a single cluster cylinder, and can be tilted 10° to the rear and 3° forward. The ACC40-24PS180 can lift 4, 000 pounds (1812.9 kg) to a height of 180 inches (4572.0 mm), employs a cluster cylinder and a single lift cylinder, and can be tilted 5.5° to the rear and 3° forward. All differences affecting maintenance of the trucks or components will be covered in the applicable paragraphs.

1-8. Identification and Tabulated Data

a. *General.* This paragraph contains the maintenance data pertinent to direct and general support maintenance personnel.

b. *Identification*. The lift truck has two identification plates mounted on the right front of the truck.

(1) *Army data plate*. This plate includes the type of truck, type of tires and model number. It also includes the contract number, serial and registration numbers, national stock number, and capacity.

(2) *Shipping plate*. The shipping plate includes capacity of lift, shipping weight and wheel loading weights. It also shows the center of gravity and applicable heights and distances for important parts of the truck.

c. Engine

Make	Continental Motors
Part Number	F13508019
Valve arrangement	Valve in block
Number of cylinders	4
Firing order	1-3-4-2
Stroke	4.375 in. (111.1 mm)
Bore	3.000 in. (76.2 mm)
Piston displacement	135 cu. in. (221 cm3)
Compression ratio	7.2:1
Idle speed	400-600 rpm
Under load speed	2000 rpm
No load speed	2350-2450 rpm
Main bearings	3
Connecting rod bearings	4

d. Steering Gear Valve.

Make	Vickers
Part number	206-1092-001
Type	Hydraulic

e. Hydraulic Pump.

Make	Tyrone Hydraulics
Part number	GPA2-115ADFD
Operating pressure	1900-2000 psi (133.7-140.6 kg/cm2)
Drive	Engine crankshaft

f. Hydraulic Control Valve.
Make .....Vickers
Part number .....
CM11N02R20TDL21BZ02
Sections 2

g. Distributor.
Make .....Prestolite
Part number 1BT4701C
Voltage 12
Rotation ....Clockwise
Type .....
Grounded
Timing range .....31-34 deg.
Point gap .....0.022 in. (0.55 mm)

h. Starter.
Make .....Delco-Remy
Part number 1107245
Voltage 12
Rotation ....Clockwise
Speed (minimum) .....5500 rpm

i. Alternator.
Make ....Delco-Remy
Part number 110578
Voltage 12
Amperage output (at 2000 rpm)..22 amps
Amperage output (at 5000 rpm)..33 amps
Amperage output (hot) ..... 37 amps
Ground ....Negative
Rotation ....
Counterclockwise

j. Transmission.
Make .....Warner Gear
Part number 10-01-000-002
Type .....Single speed
Operation .....Torque converter
Drive .....Engine flywheel

1-9. Abbreviations

The following metric abbreviations appear in this manual. The list below will enable the user to understand their meaning.

c	centrigrade
cm	centimeter
kg	kilogram
m	meter
mm	millimeter
N•m.	Newton meter

1-10. Repair and Replacement Standards and Torque Specifications

a. Repair and replacement standards applicable to components of the fork lift truck are shown in table 1-1.

b. Specific torque specifications applicable to components of the fork lift truck are shown in table 1-2.

c. Standard torque specifications are shown in table 1-3.

Table 1-1. Repair and Replacement Standards

Point of Measurement	New Parts Min	New Parts Max.	Fit, Tolerance or Wear Limit
Engine:			
Pistons:			
Outside Diameter	3.100	3.105	
Cylinder Diameter	3.125	3.127	3.135
Piston Pin			
Hole Diameter	0.859	0.859	
Ring Groove Width:			
Top	0.080	0.081	0.083
Second	0.0955	0.0956	0.0985
Third	0.0955	0.0956	0.0985
Fourth	0.188	0.188	0.0191
Piston Fit			0.003
Piston Rings:			
Width:			
Top	0.077	0.078	0.075
Second	0.093	0.094	0.091
Third	0.093	0.094	0.091
Fourth	0.184	0.188	0.182
Gap Clearance:			
Top	0.008	0.018	
Second	0.008	0.018	
Third	0.008	0.018	
Fourth	0.015	0.055	
Side Clearance:			
Top	0.002	0.004	
Second	0.0015	0.0035	
Third	0.0015	0.0035	
Fourth	0.000	0.005	

Table 1-1. Repair and Replacement Standards - Continued

Point of Measurement	New Parts Min	Max.	Fit, Tolerance or Wear Limit
Engine - Continued			
Connecting Rods:			
Hole Diameter:			
Bushing	0.913	0.914	
Bearing	2.1865	2.1870	
Bearing Thickness	0.0613	0.0616	0.0608
Crankpin Diameter	2.0619	2.0627	2.0609
Clearance 0.0006	0.0022		
Desired Clearance	0.0015	0.0015	0.0032
Side Play	0.006	0.010	
Desired Play	0.006	0.006	
Piston Pin			
Length		2.676	2.691
Diameter	0.8591	0.8593	0.8588
Bushing Hole Diameter	0.8595	0.8597	0.8607
Clearance	0.0002	0.0006	
Main Bearings:			
Diameter of Bore	2.5615	2.5622	
Bearing Thickness	0.0925	0.0928	0.0920
Journal Diameter	2.3744	2.3752	2.3734
Clearance Limits	0.0007	0.0028	
Desired Clearance	0.0015	0.0015	
Crankshaft End Play	0.002	0.006	
Center Flange Bearing:			
Thickness	0.0926	0.0929	0.0921
Clearance Limits	0.0005	0.0026	
Desired Clearance	0.0015	0.0015	
Camshaft:			
Journal Diameter:			
Front	1.8715	1.8725	1.8705
Center	1.7455	1.7465	1.7445
Rear	1.2465	1.2475	1.2455
Bushing Inside Diameter:			
Front	1.8745	1.8755	
Center	1.7495	1.7502	
Rear	1.2496	1.2505	
End Play	0.005	0.009	
Bore in Cylinder Block:			
Front	1.9995	2.0000	
Center	1.8740	1.8750	
Rear	1.3745	1.3750	
Intake Valves:			
Stem Diameter	0.3406	0.3414	0.3386
Stem Clearance	0.0008	0.0026	0.0046
Desired Clearance	0.0015	0.0015	
Valve Clearance	0.012		
Exhaust Valves:			
Stem Diameter	0.3377	0.3385	0.3357
Stem Clearance	0.0037	0.0055	0.0075
Desired Clearance	0.0045	0.0045	
Valve Clearance			0.020
Valve Guides:			
Outside Diameter	0.6565	0.6575	
Stem Hole Diameter	0.3422	0.3432	0.3447
Extension above Block	1.812	1.812	
Contact Face to Guide	1.4688	1.4688	
Length	2.3125	2.3125	
Valve Springs:			
Diameter	0.9688		
Length-Valve Closed	1.7031		
Load-Valve Closed	47 lbs. 53 lbs	42 lbs.	
Length-Valve Open	1.4219		
Load-Valve Open	96 lbs. 104 lbs	86 lbs.	

Table 1-1. Repair and Replacement Standards - Continued

Point of Measurement	New Parts Min	New Parts Max.	Fit, Tolerance or Wear Limit
Engine - Continued			
Distributor:			
Drive Shaft Bushing			
Inside Diameter	0.5005	0.5015	
Shaft Clearance	0.003	0.005	
Point Gap			0.022
Tuning Gears:			
Backlash	0.002	0.004	
Oil Pump:			
Body Drive Shaft:			
Inside Diameter	0.5005	0.5010	
Shaft Outside Diameter	0.4990	0.4995	
Running Clearance	0.0002	0.0010	
Shaft End Play	0.003	0.005	
Idler Gear:			
Inside Diameter	0.4985	0.4995	
Outside Diameter	0.4970	0.4975	
Running Clearance	0.0010	0.0025	
Clearance between Gear Teeth and Chamber Wall	0.0015	0.0025	
Flywheel and Housing:			
Face Runout			0.007 T.I.R.
Housing Bore Runout			0.010 T.I.R.
Housing Face Runout			0.006 T.I.R.
Starter:			
Pinion Clearance	0.010	0.0140	
Differential Ring Gear			
Backlash			0.005-0.010
Brake Drum Inside Diameter	11.000	11.010	11.053
Mast Bearing Clearance			0.015
Hydraulic Pump:			
Drive Gear Length			1.320
Gear Outside Diameter			1.754
Bushing Inside Diameter			0.881
Bushing Length			1.055
Housing Bore Inside Diameter			1.770
Spool Lands			0.748
Spool Spring Free Length			3.500
Relief Valve Spring Free Length			0.800
Mast Interlock Spring Length:			
ACC40-24PS100			6.18
ACC40-24PS180			2.62
Service Brakes:			
Upper Return Spring:			
Free Length			7.5
Initial Tension			30 lbs.
Initial Stretch			0.5
Lower Return Spring:			
Free Length			3.0625
Initial Tension			30 lbs.
Initial Stretch			0.25
Drive Axle Shaft Bearing Surface	1.3775	1.3785	
Bull Gear:			
Runout of Face			0.010
Runout of Inside Diameter			0.005

Table 1-2. Specific Torque Specifications

Item	Torque (pound-feet) (Newton meters)
Engine:	
Cylinder head screws	70-75 (94.9-101.6)
Bearing cap screws	85-95 (115.2-128.8)
Connecting rod screws	40-45 (54.2-61.0)
Flywheel screws	35-40 (47.4-54.2)
Manifold nuts	25-30 (33.8-40.6)
Gear cover screws	50-55 (67.7-74.5)
Oil pan screws	
Oil pan screws	12-16 (16.2-21.6)
Flywheel housing screws	50-55 (67.7-74.5)
Camshaft nut	175-180 (236.2-243.0)
Alternator shaft nut	40-60 (54.2-81.3)
Transmission valve mounting screws	5-10 (6.7-13.5)
Flex plate mounting screws	20-23 (27.1-31.1)

Table 1-2. Specific Torque Specifications - Continued

Item	Torque (pound-feet) (Newton meters)
Drive shaft mounting screws:	
Dry	25-30 (33.8-40.6)
Lubricated	20-24 (27.1-32.5)
Wheel bearing nuts	118-122(160.0-162.7)
Brake adjuster screws	14-16 (18.9-21.6)
Brake adjuster nuts	28-30 (37.9-40.6)
Steering axle:	
Adjusting screw	10-15 (13.5-20.3)
Adjusting screw nut	90-100 (122.0-35.6)
Spindle nut	24-26 (32.5-35.2)
Steering valve:	
Check valve seat	149-151 (192.0-204.7)
Mounting plate screws	249-251 (337.6-340.3)
End plate screws	149-151 (192.0-204.7)
Mast bearing screw	244-246 (329.4-332.1)
Engine mounting screws	19-21 (25.6-28.3)

Table 1-3. Standard Torque Specifications

Capscrew Size	Torque (pound-feet) (Newton-meters)	
	Coarse Thread	Fine Thread
1/4-inch	911 (12.2-14.9)	11-13 (14.9-17.6)
5/16-inch	18-20 (24.4-27.1)	21-23 (28.4-31.1)
3/8-inch	28-33 (36.6-44.7)	30-35 (40.6-47.4)
7/16-inch	44-49 (59.6-66.4)	50-55 (67.7-74.5)
1/2-inch	68-73 (92.1-98.9)	68-73 (92.1-98.9)
9/16-inch	95-105 (128.8-141.7)	95-105 (128.8-141.7)
5/8-inch	125-135 (168.7-183.0)	125-135 (168.7-183.0)
3/4-inch	210-230 (284.7-311.8)	210-230 (284.7-311.8)
7/8-inch	290-310 (393.2-420.3)	290-310 (393.2-420.3)
1-inch	380-410 (515.2-554.9)	380-410 (515.2-554.9)

CHAPTER 2
DIRECT SUPPORT AND GENERAL SUPPORT MAINTENANCE INSTRUCTIONS

Section I. REPAIR PARTS, SPECIAL TOOLS AND EQUIPMENT

2-1. Tools and Equipment

Tools and equipment necessary for the repair of the fork lift truck, are authorized by Tables of Allowances (TA) and equipment (TOE).

2-2. Special Tools and Equipment

No special tools and equipment are required by direct and general support maintenance personnel for performing maintenance on fork lift truck.

2-3. Maintenance Repair Parts

Repair parts and equipment authorized for direct and general support maintenance is listed in TM 10-3930-630-34P.

Section II. TROUBLESHOOTING

2-4. General

a. This section contains troubleshooting information for locating and correcting most of the troubles which may develop in the fork lift truck. Each malfunction for an individual component, unit, or system is followed by a list of tests or inspections which will help you determine probable causes and the corrective action to take. Perform the tests, inspections, and corrective actions in the order listed.

b. This manual cannot list all malfunctions that may occur, nor all tests, inspections, or corrective actions. If a malfunction is not listed or corrected by listed corrective actions, notify your supervisor.

2-5. Troubleshooting Table

Refer to table 2-1 for troubleshooting malfunctions, tests or inspections to be completed and the recommended corrective action.

Table 2-1. Troubleshooting

MALFUNCTION	TEST OR INSPECTION	CORRECTIVE ACTION
1. ENGINE MISSES.		
	Step 1. Check valves for warping.	Replace warped valves (para 11-4).
	Step 2. Check for sticking valves.	Clean stem and guide. Grind valve if necessary.
2. ENGINE KNOCKS.		
	Step 1. Check for loose connecting rod bearings if it is a sharp knock and oil pressure is low.	Replace bearings (para 11-18).
	Step 2. Check for loose main bearings if it is a heavy knock and oil pressure is low.	Replace main bearings (para 11-36).
	Step 3. Check for loose piston pins if it is a sharp double knock.	Replace pins or bushings (para 11-18).
	Step 4. Check for worn pistons or cylinders.	Replace pistons and rings (para 11-18).
3. ENGINE LOSES POWER.		
	Step 1. Check for leaking valves and low compression.	Adjust or grind valves (para 11-4).
	Step 2. Check for worn or sticking piston rings.	Replace piston rings (para 11-18).

Table 2-1. Troubleshooting - Continued

MALFUNCTION	TEST OR INSPECTION	CORRECTIVE ACTION
4. EXPLOSION IN EXHAUST.		
	Step 1. Check for partially open exhaust valve.	Replace broken or defective spring (para 11-4).
	Step 2. Check for improper timing.	Check distributor, spark plugs and engine timing (TM 10-3930-630-12).
5. ENGINE RUNS IRREGULARLY.		
	Step 1. Check for warped or burned valves.	Replace valves (para 11-4).
	Step 2. Check for leaking valves.	Adjust, grind or replace as necessary (para 11-4).
6. ENGINE OIL PRESSURE LOW.		
	Step 1. Check relief valve for dirt or broken spring.	Clean relief valve or replace spring (para 11-14).
	Step 2. Check oil pump for clogged screen.	Clean screen (para 11-11).
	Step 3. Check oil pump for wear and damage.	Repair or replace oil pump (para 11-11).
	Step 4. Check for worn main or connecting rod bearings.	Replace worn bearings (para 11-18).
	Step 5. Check for worn camshaft bearings.	Replace worn bearings (para 11-25).
7. ENGINE OIL CONSUMPTION HIGH.		
	Step 1. Check compression of engine.	Adjust or replace valves or pistons (para 11-4 and 11-18).
	Step 2. Check for stuck or damaged relief valve.	Clean or repair relief valve (para 11-14).
	Step 3. Check for worn or damaged piston rings and pistons.	Replace pistons and/or piston rings (para 11-18).
	Step 4. Check for worn bearings.	Replace bearings (para 11-18).
	Step 5. Check for worn valve guides.	Replace valve guides (para 11-4).
8. TRANSMISSION DOES NOT OPERATE PROPERLY.		
	Step 1. Check for dirty or defective control valve.	Repair or replace control valve (para 12-7).
	Step 2. Check for defective transmission pump.	Repair or replace transmission pump (para 12-12).
	Step 3. Check clutch pressures.	Repair or replace clutches (para 12-13).
9. DRIVE AXLE DOES NOT OPERATE PROPERLY.		
	Step 1. Check for damaged or defective differential.	Repair or replace differential (para 10-15).
	Step 2. Check for correct axle clearances.	Adjust clearances or repair axle (para 10-11).
10. ALTERNATOR NOT OPERATING PROPERLY.		
	Step 1. Check for worn brushes and damaged springs.	Replace springs and/or brushes (para 4-3).
	Step 2. Check for dirty or worn commutator.	Repair commutator or replace armature (para 4-3).
	Step 3. Check for grounded or open rotor.	Replace rotor (para 4-3).

Table 2-1. Troubleshooting - Continued

MALFUNCTION	TEST OR INSPECTION	CORRECTIVE ACTION
	Step 4.	Check for grounded or open stator. Replace stator (para 4-3).
	Step 5.	Check for shorted or open diodes. Replace diodes (para 4-3).
11. STARTER NOT OPERATING PROPERLY.		
	Step 1.	Check for damaged brush springs and worn brushes. Replace springs and/or brushes (para 4-7).
	Step 2.	Check for dirty or worn commutator. Repair commutator or replace armature (para 4-7).
	Step 3.	Check for worn or damaged drive assembly. Repair or replace drive assembly (para 4-7).
	Step 4.	Check for worn or broken teeth on flywheel ring gear. Replace ring gear (para 4-7).
12. SERVICE BRAKE DOES NOT OPERATE PROPERLY.		
	Step 1.	Check master cylinder for wear and damage. Repair or replace master cylinder (para 9-11).
	Step 2.	Check wheel cylinders for wear and damage. Repair or replace wheel cylinder (para 9-7).
13. STEERING DOES NOT OPERATE PROPERLY.		
	Step 1.	Check for worn or damaged steering cylinder. Repair or replace steering cylinder (para 8-5).
	Step 2.	Check steering valve for proper operation. Adjust, repair or replace steering valve (para 8-9).
	Step 3.	Check hydraulic pump for proper operation. Adjust, repair or replace hydraulic pump (para 3-24).
14. LIFT MECHANISM DOES NOT OPERATE PROPERLY.		
	Step 1.	Check control valve operation. Adjust, repair or replace control valve (para 3-19).
	Step 2.	Check lift cylinder operation. Repair or replace lift cylinders (para 3-7 and 3-11).
	Step 3.	Check hydraulic pump operation. Repair or replace hydraulic pump (para 3-24).
15. TILT MECHANISM DOES NOT OPERATE PROPERLY.		
	Step 1.	Check tilt cylinder operation. Repair or replace tilt cylinder (para 3-3).
	Step 2.	Check control valve operation. Repair or replace control valve (para 3-19).
	Step 3.	Check hydraulic pump operation. Repair or replace hydraulic pump (para 3-24).
16. SERVICE BRAKES DO NOT STOP TRUCK PROPERLY.		
	Step 1.	Check master cylinder operation. Repair or replace master cylinder (para 9-11).
	Step 2.	Check wheel cylinder operation. Repair or replace wheel cylinder (para 9-7).
17. TRUCK DOES NOT STEER PROPERLY.		
	Step 1.	Check steering cylinder. Repair or replace steering cylinder (para 8-5).
	Step 2.	Check steering valve. Repair or replace steering valve (para 8-9).
	Step 3.	Check steering axle. Adjust, repair or replace steering axle (para 10-3).

Section III. GENERAL MAINTENANCE INSTRUCTIONS

2-6. General

a. This section provides general cleaning, inspection and repair instructions that are common to components used on the fork lift truck.

b. Special cleaning, inspection and repair instructions applicable to any individual component is covered with that component in the applicable sections of this manual.

2-7. General Cleaning Instructions

a. Metal Parts.

(1) Prior to removal or disassembly of major components, clean off excess oil or dirt with a cleaning solvent (Fed Spec P-D-680) or steam clean.

(2) Use a cleaning solvent (Fed Spec P-D-680) to clean parts such as gears, housings and hand packed bearings.

CAUTION

Do not immerse oil impregnated bearings or sealed bearings in cleaning solvent. Clean with a solvent moistened cloth.

(3) Use brushes to clean irregular shaped surfaces; use wooden pegs to clean ports and orifices. Use a lint free cloth to wipe parts clean.

(4) Exercise care when handling machined and polished surfaces to avoid nicks and other damage. Do not immerse more than one metal machined part in solvent at the same time unless such parts are separated or protected from contacting each other.

b. Electrical Components.

(1) Prior to removal or disassembly of electrical components, clean exterior by scraping off excess oil and dirt. Wipe clean with a lint free cloth dampened with cleaning solvent (Fed. Spec P-D680).

CAUTION

Do not immerse any electrical component or device in cleaning solvent.

(2) Clean armatures, coils and solenoids with compressed air and wipe clean with a lint free cloth dampened in cleaning solvent.

WARNING:

Safety glasses must be used when cleaning parts with compressed air.

(3) Wipe electrical terminals clean with a lint free cloth dampened with cleaning solvent. Use a soldering iron to clean solder from terminals and connectors.

c. Gaskets, Seals aced O-Rings.

(1) Clean all old gasket particles from mating surface. (2) Discard and replace all gaskets, seals, O-rings and felt washer.

2-8. General Inspection Instructions

a. General. Perform an inspection of all parts as soon as possible after cleaning. Instructions for specific inspection procedures are included in the text at the point in overhaul procedures where the inspection must be performed.

b. Visual Inspection.

(1) Visually inspect all machined and polished areas. Use a strong light to shine across polished surfaces to inspect for scoring, cracks, breaks or excessive wear.

(2) Visually inspect all gears for evidence of metal to metal abrasion, pitting, cracks, breaks, chipped teeth or excessive wear.

c. Electrical Parts.

(1) Visually inspect wiring harness and wiring for frayed edges or damaged insulation.

(2) Inspect all electrical parts such as solenoids, with power applied, to observe actual operation.

d. Dimensional Inspection. Refer to table 1-1 for minimum, maximum and allowable clearances and perform a dimensional inspection. Central dimensional inspections must be performed during reassembly of components.

2-9. General Repair Instructions

a. Thread Repair. Use the proper size tapping tool to repair tapped holes. Discard and replace all hardware that has defective threads.

b. Press Fit Parts.

(1) Gears and bearings may require the use of a pneumatic or hand operated arbor press.

(2) Preheat all press-fit parts before reassembly if specified. Use a lubricant if necessary to reduce abrasive action.

CAUTION

Do not press on the outer race of bearings when installing on shafts. Do not press on inner race of bearing when installing in a housing.

2-10. Welding Instructions

a. Many of the components of the lift truck are welded or can be repaired by welding.

b. Observe good welding practices when repairing by welding. Refer to TM 9-237 for correct welding techniques.

c. When repair of a component of the lift truck requires special welding instructions, these instructions will be included in the applicable paragraphs.

Section IV. REMOVAL AND INSTALLATION OF MAJOR COMPONENTS AND ASSEMBIES

2-11. General

a. The major components of the fork lift truck consist of the control valve, hydraulic pump, steering gear valve, engine assembly, service brakes, front drive axle, rear steering axle and the transmission.

b.. The paragraphs in this section are for the removal and installation of the above components.

2-12. Hydraulic Pump, Removal

a. Raise up the rear of the truck with a hoist of at least 6,000 pound capacity attached to the lifting eyes. Securely block truck in a raised position.

b. Refer to TM 10-3930-630-12 and drain the hydraulic reservoir. Plug all hoses and tubes to avoid dirt from entering the hydraulic system.

c. Remove screws (1, fig. 2-1) and lock washers (2) and disconnect suction tube (5) from hydraulic pump. Remove split flanges (3) and packing (4). Plug tube and pump to prevent entrance of foreign material.

d. Disconnect steering hose (6) from elbow (7) and remove elbow, check valve (9) and packings (8 and 10) from pump. Plug steering hose and pump opening.

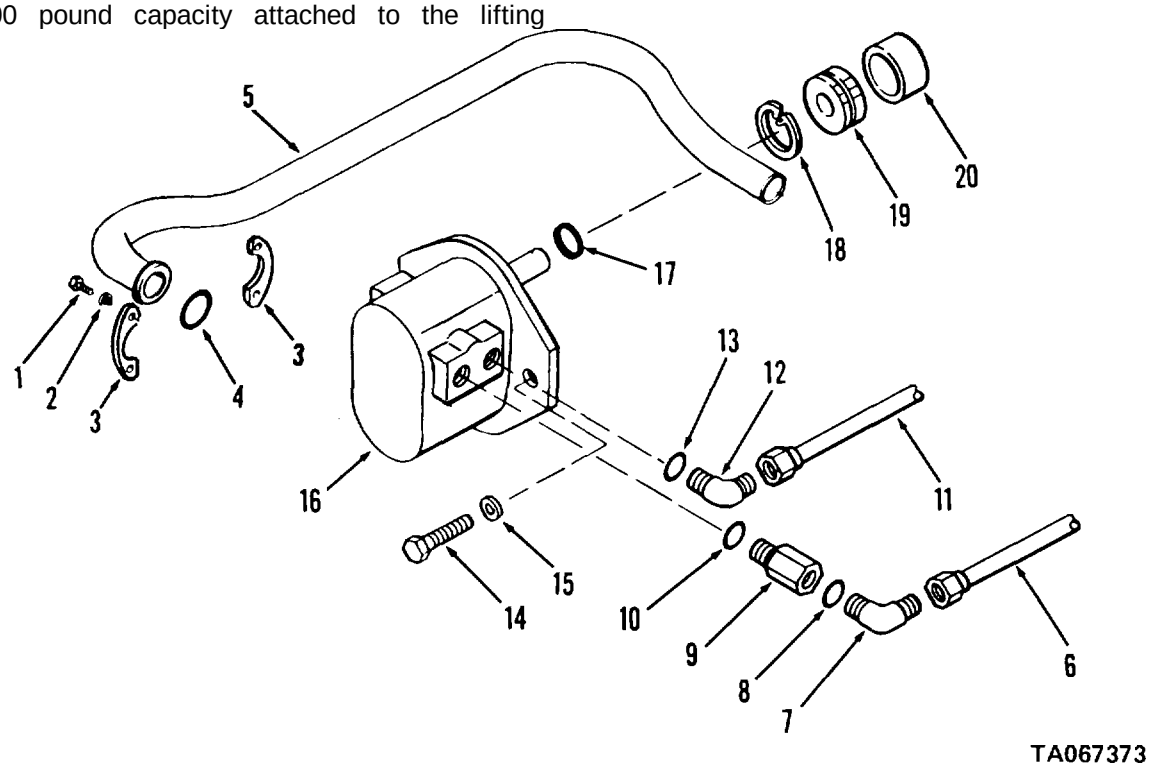

TA067373

1 Screw	6 Steering hose	11 Outlet hose	16 Hydraulic pump
2 Lock washer	7 Elbow	12 Elbow	17 Packing
3 Split flange	8 Packing	13 Packing	18 Retaining ring
4 Packing	9 Check valve	14 Screw	19 Hydraulic pump gear
5 Suction tube	10 Packing	15 Lock washer	20 Sleeve

Figure 2-1. Hydraulic pump, removal and installation.

e. Disconnect large outlet hose (11) from elbow (12) and remove elbow and packing (13) from pump. Plug outlet hose and pump opening.

f. Remove screws (14) and lock washers (15) and carefully remove hydraulic pump (16) from engine gear cover. Remove packing (17).

g. Remove retaining ring (18) and pump gear (19) from sleeve.

2-13. Hydraulic Pump, Cleaning and Inspection

a. Clean hydraulic pump in cleaning solvent, (Fed. Spec. P-D-680). Dry thoroughly with compressed air.

b. Inspect pump for cracks, breaks, or other damage.

2-14. Hydraulic Pump, Installation

a. Install pump gear (19, fig. 2-1) in sleeve (20) and secure gear with retaining ring (18).

b. Coat new packing (17) with grease (GAA) and install packing on shaft of pump (16).

c. Align pump shaft with splines in pump gear (19) and with mounting holes in gear cover and install pump (16) on gear cover. Secure pump with screws (14) and lock washers (15).

d. Install new packing (13) and elbow (12) in pump (16). Remove plugs and connect outlet hose (11) to elbow.

e. Install new packings (8 and 10) and check valve (9) and elbow (7) on pump (16). Remove plugs and connect steering hose (6) to elbow.

f: Coat packing (4) with oil (OE/HDO) and connect suction tube (5) to pump. Secure tube with flanges (3), screws (1) and lock washers (2).

g. Remove blocking and lower truck to floor.

h. Fill hydraulic system if necessary and bleed system (TM 10-3930-630-12). Operate truck and check hydraulic system for leaks.

2-15. Steering Gear, Removal

a. General. The steering gear valve is mounted at the base of the steering column. Hoses connected to the valve carry hydraulic oil from the pump and to the steering cylinder.

b. Removal.

(1) Refer to TM 10-3930-630-12 and remove the floor and toe plates.

(2) Refer to TM 10-3930-630-12 and disconnect horn wire at the horn.

(3) Disconnect five hoses (fig. 2-2) from steering valve. Plug hose ends and cap elbows in valve.

(4) Remove screw, lock washer, and nut securing steering column clamp (fig. 2-2) to support. Remove clamp.

(5) Remove two screws and lock washers securing upper clamp (fig. 2-2) to shift lever bracket and remove clamp.

(6) Support steering gear and remove two mounting screws (fig. 2-2) and lock washers securing gear valve to bracket. Carefully lift steering gear, with steering wheel and column attached, up and out of truck, Place steering gear on a clean work surface.

2-16. Steering Gear, Cleaning and Inspection

a. Clean steering gear components with cleaning solvent, (Fed. Spec. P-D-680). Dry thoroughly with compressed air.

b. Inspect all parts of the steering gear for cracks breaks or excessive wear.

2-17. Steering Gear, Installation

a. Lift complete steering gear into position on truck. Support steering gear in position and secure to bracket with two mounting screws (fig. 2-2) and lock washers.

b. Install upper clamp (fig. 2-2) on shift lever bracket and secure with two screws and lock washers. Do not tighten screws completely.

c. Install steering column clamp (fig. 2-2) and slide screw through clamp and pivot on support. Install nut and lock washer.

d. Check alignment of steering and shift columns and tighten clamps.

e. Remove plugs and caps and connect five steering cylinder hoses (fig. 2-2) to steering gear valve.

f. Refer to TM 10-3930-630-12 and fill and bleed hydraulic system. Operate truck and check steer- ing system for leaks.

g. Install floor and toe plates (TM 10-3930-630-12).

2-18. Engine and Transmission Removal

a. The engine is installed in a compartment below and to the rear of the operator's seat. The torque convertor and transmission are directly coupled to the engine flywheel. Support for the engine is supplied by brackets at each side of the flywheel housing and at the center of the fan end of the engine.

b. Refer to TM 10-3930-630-12 and perform the following operations.

(1) Remove body panels and hood.
(2) Remove operator's seat.
(3) Remove radiator and fan belts.
(4) Tag and disconnect wiring.
(5) Remove muffler and exhaust pipe.
(6) Remove air cleaner.
(7) Disconnect fuel lines.
(8) Disconnect throttle linkage.
(9) Disconnect choke control.
(10) Drain transmission and disconnect filter hoses.
(11) Disconnect drive shaft.
(12) Remove stop and taillights.

c. Refer to paragraph 2-12 and remove hydraulic pump.

d. Refer to figure 2-3 and disconnect the transmission linkage.

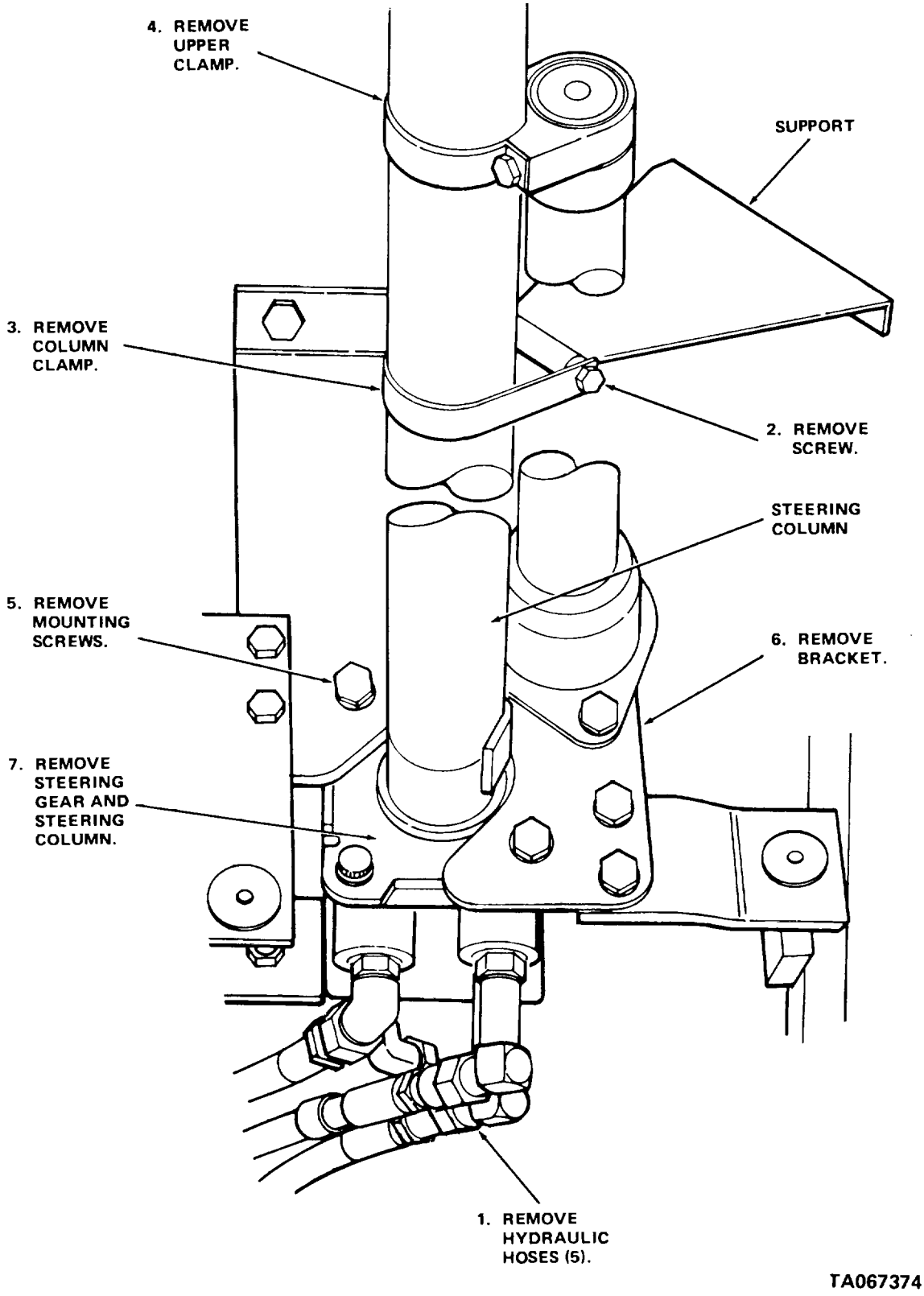

TA067374

Figure 2-2. Steering gear, removal and installation.

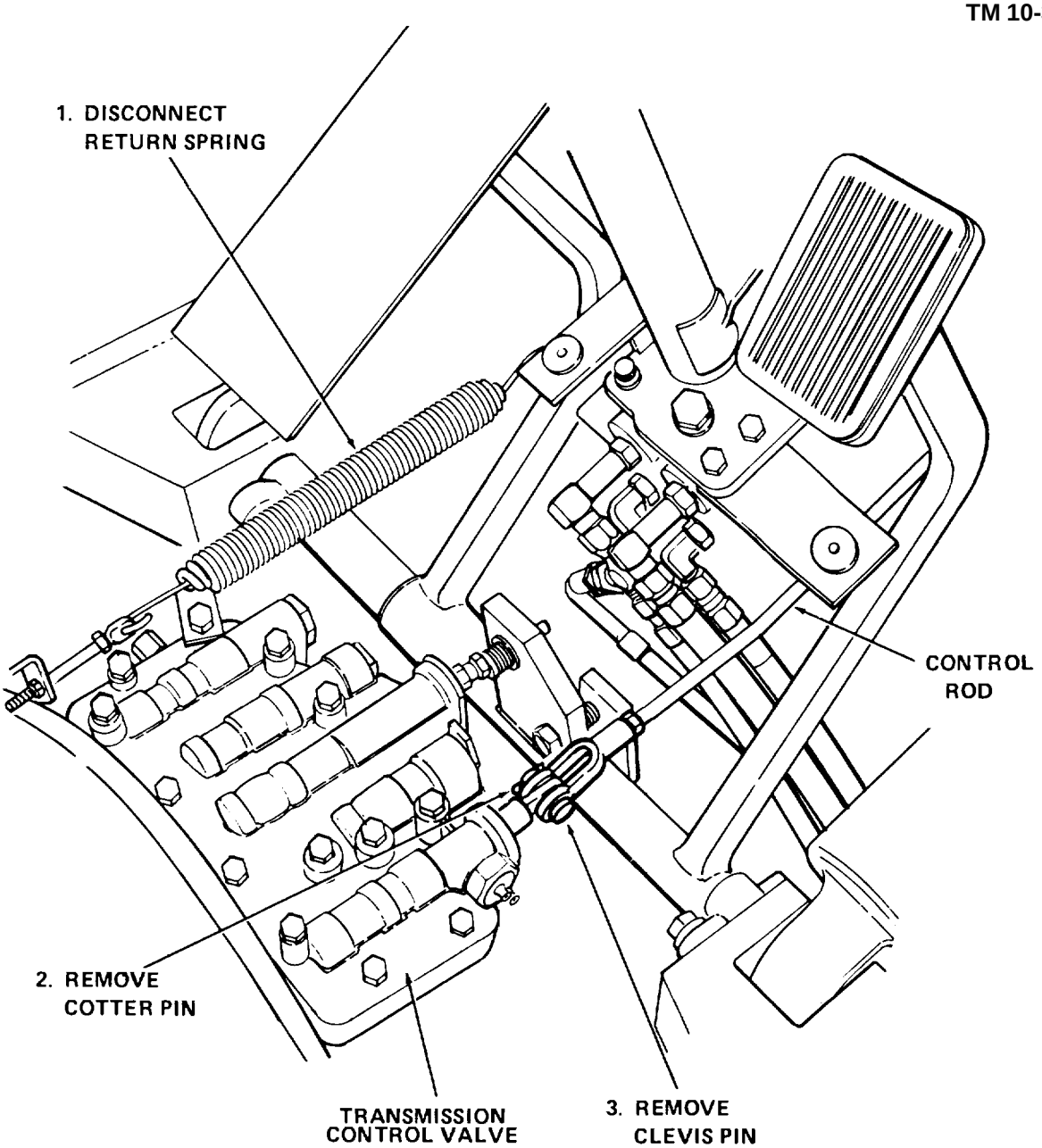

TA067375

TA067375

Figure 2-3. Transmission linkage, removal and installation.

e. Refer to figure 2-4 and remove and towing shackle.

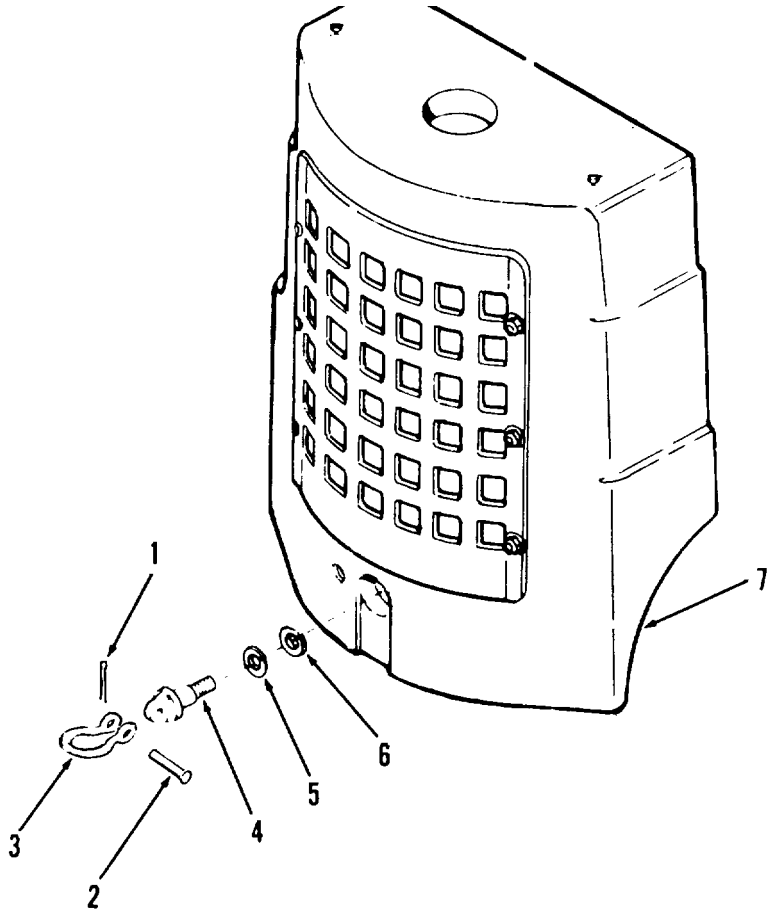

TA067376

TA067376

Figure 2-4. Towing shackle, removal and installation.

f. Attach lifting eyes to counterweight. Attach a suitable hoist and chain to lifting eyes and take up on hoist to relieve pressure on counterweight mounting screws. Remove mounting screws and remove counterweight as illustrated in figure 2-5.

NOTE

Counterweight is very heavy and must be handled with care.

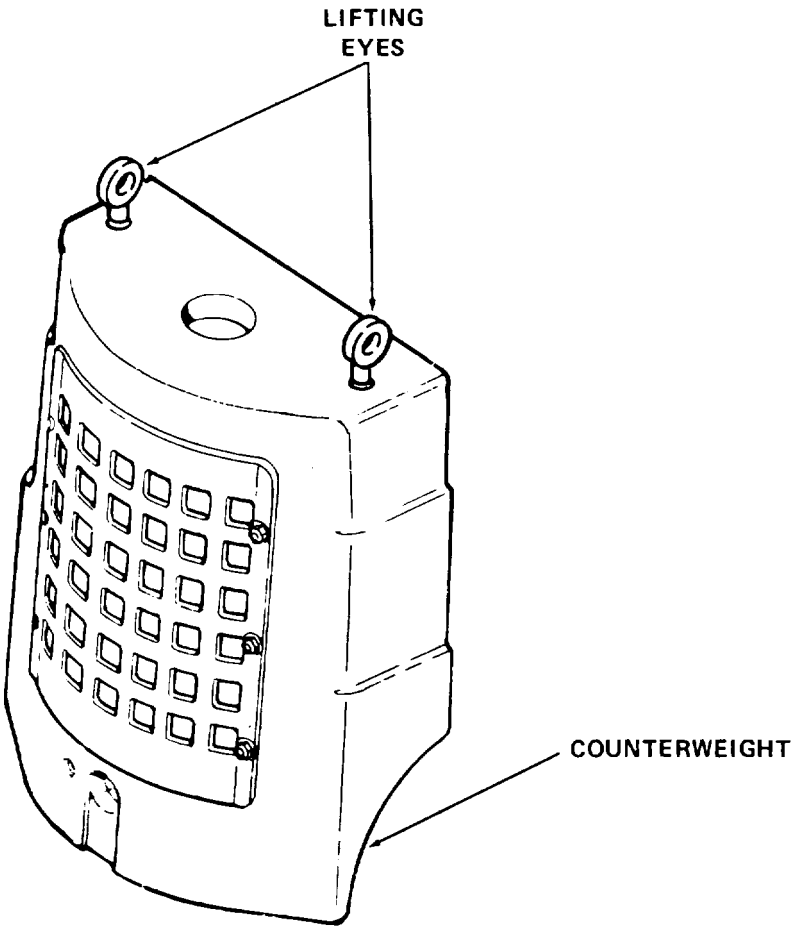

TA067377

Figure 2-5. Counterweight, removal and installation.

g. Install lifting eyes in engine and transmission. Attach a hoist of at least 6, 000 pound capacity, and chain to engine and transmission and take up slack in chain.

h. Remove three nuts (1, fig. 2-6) and washers (2). Remove screws (3) from brackets.

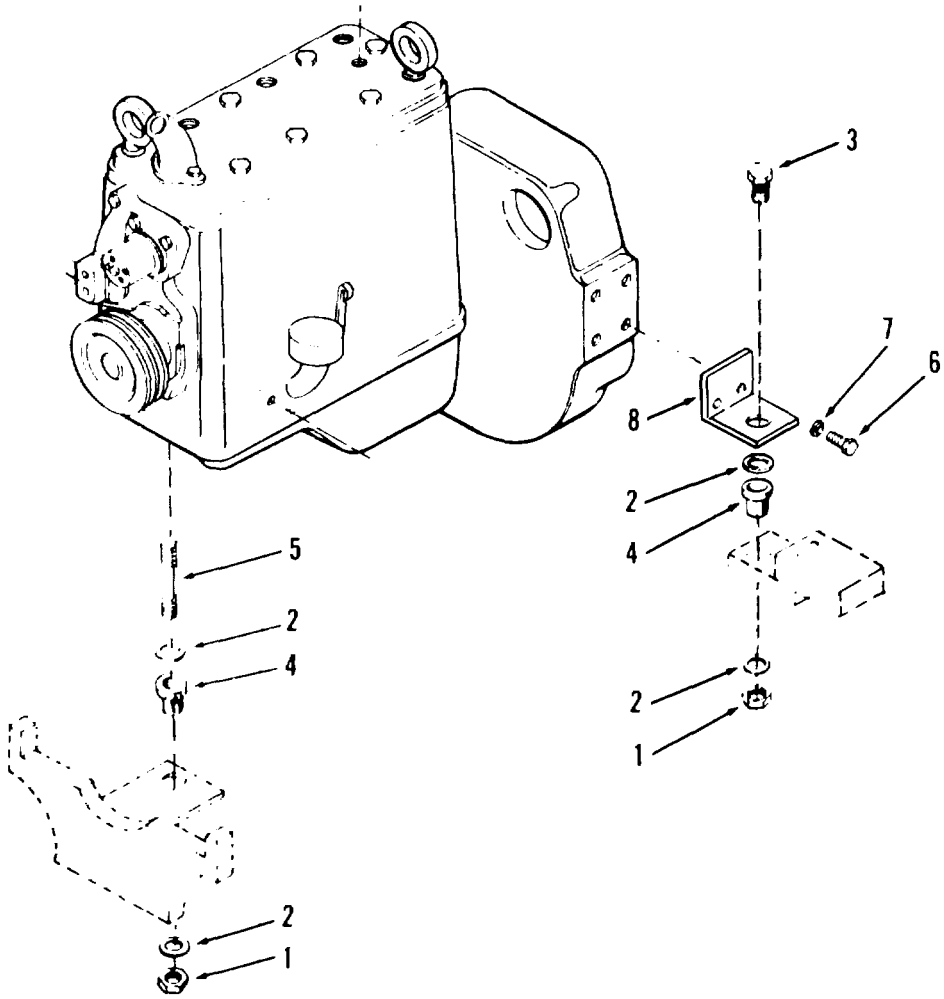

TA067378

1 Nut	5 Stud
2 Washer	6 Screw
3 Screw	7 Lock washer
4 Mount	8 Bracket

Figure 2-6. Engine, removal and installation

i. Slowly lift engine, with attached transmission, from the truck frame and up and out of engine compartment.

j. Inspect mounts (4). If cracked, damaged or deteriorate(d replace engine mounts.

k. Lower engine and transmission on a suitable engine support and disengage chains.

l. Remove screws (1, fig. 2-7) and lock washers (2) securing transmission to the engine.

m. Use a suitable hoist with a capacity of at least
6, 000 pounds and lift the transmission assembly
(11) from the engine flywheel housing.

n. Mark location of timing decals on flex plate (7) in relation to flywheel for proper installation.

o. Remove screws (5) and lock washers (6) and remove torque converter (8) with attached reinforcing plate (4) and flex plate (7) from engine flywheel. Remove shim (9).

2-19. Engine and Transmission, Cleaning and Inspection

a. Clean the engine and transmission with cleaning solvent (Fed. Spec. P-D-680). Dry thoroughly with compressed air.

b. Check engine for dents, cracks or other damage. Check mounts for damage and deterioration.

c. Check transmission for cracks, dents, evidence of leakage, and secure mounting to engine.

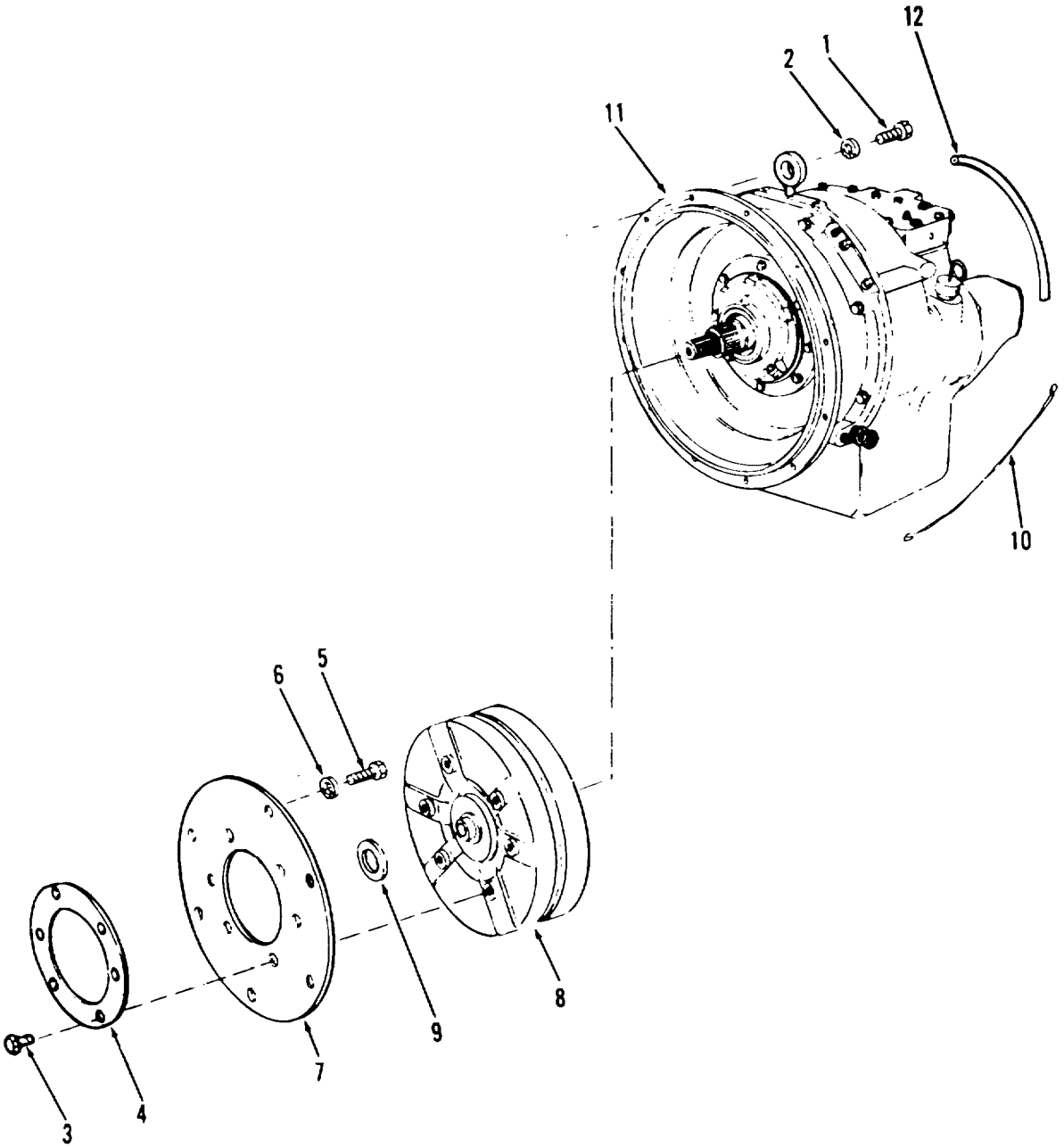

TA067379

1 Screw	7 Flex plate
2 Lock washer	8 Torque converter
3 Screw	9 Shim
4 Reinforcing plate	10 Wire
5 Screw	11 Transmission
6 Lock washer	12 Pressure gage tube

Figure 2-7. Transmission, removal and installation

2-20. Engine and Transmission Installation

a. Install torque converter (8, fig. 2-7) with attached flex plate, on transmission input shaft. Check to be sure that both splines and tangs driving converter charging pump are fully engaged.

b. Rotate converter to position timing decal (fig. 2-8) on flex plate at top.

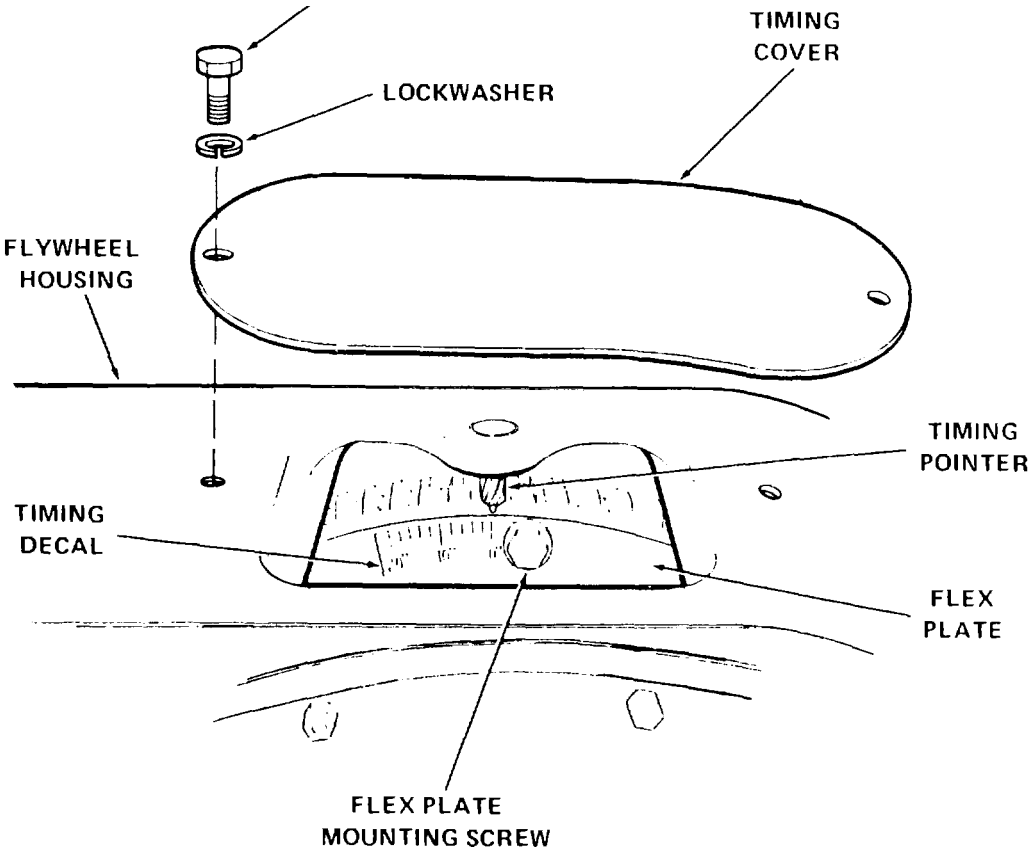

TA067380

TA067380

Figure 2-8. Flywheel housing timing cover, removal and installation.

c. Remove screws (fig. 2-8) and lock washers and remove cover from top of engine flywheel housing. Turn engine over until timing pointer (fig. 2-8) on flywheel housing is visible through inspection hole in top of flywheel housing.

d. Install shim (9, fig. 2-7) on front of converter. Use a hoist and lift transmission into position on flywheel housing. Align timing decal on flex plate with timing pointer on housing. Check marks made on flywheel and flex plate during removal to see that they are aligned.

e. Pilot on converter must mate with hole in flywheel. Bolt heals on reinforcing plate will match clearance holes in flywheel.

f. Secure transmission housing to flywheel housing with two screws (1) an(l lock washers (2).

g. Through timing cover inspection hole in flywheel housing install one screw (5) and lock washer (6) at the (decal to secure flex plate (7) to flywheel. Tighten screw to a torque of 20 to 2.3 foot pounds (27.1 to 31.1 N m).

h. Rotate flywheel and install remaining screws and lock washers and torque as above. Install timing cover on (fig.2-8) flywheel housing.

i. Install remaining screws (1) and lock washers (2) to secure transmission to flywheel housing.

j. If engine mounts (4, fig. 2-6) were remove, install new mounts in holes in frame.

k. Install lifting eyes in engine and transmission. Connect a chain and hoist to lifting eyes and carefully lift transmission and engine into place on frame in engine compartment.

l. Secure engine to frame with screws (3), washers (2) and nuts (1). Tighten nuts to a torque of 20 foot pounds (27.1 N•m).

m. Refer to paragraph 2-14 and install hydraulic pump.

n. Refer to figure 2-5 and with a suitable hoist, lift counterweight into place on rear of frame. Secure counterweight with mounting screws. Install stud and towing shackle (fig. 2-4) in counterweight and frame.

o. Refer to TM 10-3930-630-12 and install stop and tail light on counterweight and connect wires to tail light.

p. Refer to figure 2-3 and connect transmission linkage to transmission.

q. Refer to TM 10-3930-630-12 and perform the following operations.

(1) Connect drive shaft to transmission.

(2) Connect transmission filter hoses and cooling hoses to transmission. Connect transmission pressure gage tube to transmission.

(3) Connect throttle and choke linkage to carburetor.

(4) Connect fuel line from shutoff valve to fuel filter.

(5) Install air cleaner and connect all air hoses and tubes.

(6) Install muffler and exhaust pipes.

(7) Install fan, fan belts, and radiator.

(8) Install battery tray and battery.

(9) Connect wiring to transmission neutral start switch, hour meter actuator, oil pressure and temperature sending units, starter, alternator, resistor, coil and distributor.

(10) Install engine oil filter bracket and oil filter and connect oil hoses to filter and engine.

(11) Install front screen, seat deck, seat support and operator's seat.

(12) Fill radiator to proper level with coolant.

(13) Install drain plug and fill transmission.

(14) Fill engine with proper grade of oil.

2-21. Engine Test

a. Refer to TM 10-3930-630-12. Start engine and run at idle speed for five minutes. Shut off engine and check radiator coolant level, engine crankcase oil level and transmission oil level.

b. Check for oil, fuel and coolant leaks.

c. Correct any leaks that are found. Replenish fuel, oil and coolant as necessary.

d. Install floor and toe plates and close side panels.

2-22. Engine Removal

a. Refer to paragraph 2-18 b. and remove the accessories listed in subparagraphs b (1) through (9).

b. Refer to TM 10-3930-630-12 and remove the stop and taillight.

c. Remove the hydraulic pump (para 2-12).

d. Refer to figure 2-3 and disconnect the transmission linkage.

e. Refer to figure 2-5 and remove the counterweight.

f. Remove screws (1, fig. 2-7) and lock washers (2) to disconnect transmission from engine.

g. Remove three nuts (1, fig. 2-6), washers (2) and screws (3) from mounting bracket.

h. Attach a suitable lifting device with a capacity of at least 6, 000 pounds to the engine lifting eyes.

i. Block the transmission to prevent it from falling when the engine is removed.

j. Use a suitable lifting device with a capacity of at least 6,000 pounds and slowly lift the engine out of the fork lift truck.

k. Lower the engine on suitable supports and disconnect the lifting device.

l. Refer to paragraph 2-18 and remove flex plate from engine flywheel. Remove transmission gasket.

2-23. Engine, Cleaning and Inspection

a. Clean the engine with cleaning solvent, (Fed. Spec. P-D-680). Dry thoroughly with compressed air.

b. Inspect the engine mounts (4, fig. 2-6) for excessive wear. Inspect all mounting hardware. Replace all defective parts.

2-24. Engine Installation

a. Refer to paragraph 2-20 and install flex plate (7, fig. 2-7) on engine flywheel. Install transmission gasket.

b. Install three engine mounts (4, fig. 2-6) in the fork lift frame.

c. Install lifting eyes on the engine. Attach a suitable lifting device with a capacity of 6,000 pounds to the lifting eyes and carefully lift the engine assembly into the engine compartment to mate with transmission. Secure transmission to engine with screws (1, fig. 2-7) and lock washers (2).

d. Install two screws (3, fig. 2-6), four washers (2) and secure with two nuts (1). Torque the nuts to 20 ft-lbs. (27.1 N•m).

e. Install washer (2) on stud (5) and secure the front of engine with second washer (2) and nut (1).

f. Install the hydraulic pump (para 2-14).

g. Refer to figure 2-5 and install the counterweight.

h. Refer to paragraph, 2-20 and install the accessories listed in subparagraphs q (3) through (14).

i. Test the engine (para 2-21).

2-25. Transmission Removal

a. Refer to TM 10-3930-630-12 and remove operator's seat, seat support, seat deck, floor and toe plates, transmission oil filter, front screen, battery and battery box.

b. Drain oil from transmission and disconnect transmission cooler lines and oil filter lines from transmission. Plug lines to prevent entrance of dirt.

c. Disconnect transmission pressure gage tube (12, fig. 2-7) from transmission.

d. Disconnect wires from neutral start switch in transmission control valve.

e. Refer to figure 2-3 and disconnect linkage from the transmission.

f: Refer to TM 10-3930-630-12 and disconnect drive shaft from transmission.

g. Remove tinting cover at top of flywheel housing as illustrated in figure 2-8.

h. Rotate engine and bring timing decal on transmission flex plate in line with timing pointer. Match mark flex plate and engine flywheel.

i. Working through timing cover hole in top of flywheel housing, remove screws (5, fig. 2-7) and lock washers (6) securing flex plate to engine flywheel.

j. Install lifting eyes in transmission and attach lifting chain and hoist with a capacity of at least 6,000 pounds to transmission. Lift transmission to take tension from mounting bolts.

k. Remove screws (1, fig. 2-7) and lock washers (2). Carefully lift transmission assembly away from engine flywheel housing and truck. Place transmission on suitable supports and disconnect lifting chains. Remove shim (9) if necessary and transmission gasket.

2-26. Transmission Cleaning and Inspection

a. Clean the transmission with cleaning solvent, (Fed. Spec. P-D-680). Dry thoroughly with compressed air.

b. Check transmission case for cracks, breaks, or other damage which may cause leakage.

2-27. Transmission Installation

a. Attach chain and hoist to transmission. Install shim (9, fig. 2-7) if removed. Install new gasket between flywheel housing and transmission.

b. Rotate flex plate to bring timing decal to top to align with timing pointer in flywheel housing.
Check to see that timing cover (fig. 2-8) is removed from inspection hole at top of flywheel housing.

c. Lift transmission assembly and carefully lower transmission into line with engine flywheel housing. Align timing decal with timing pointer. Check marks made on flywheel and flex plate made during removal to see that they are aligned(l.

d. Secure transmission housing to flywheel housing with two screws (1, fig.2-7) and lock washers (2). Install screws, one on each side, to hold transmission in place.

e. Working through timing cover inspection hole in top of flywheel housing, install one screw (5) an, d lock washer (6) at decal and torque to 20 to 23 foot pounds (27.1 to 3.1. N m).

f. Rotate flywheel as necessary and install remaining screws (5) and lock washers (6). Tighten screws to torque specified in "e," above. Install cover on flywheel housing.

g. Install remaining transmission mounting screws (1) and lock washers (2).

h. Refer to TM 10-3930-630-12 and connect drive shaft to transmission.

i. Refer to figure 2-3 and connect. linkage to transmission.

j . Connect wires to neutral start switch on transmission control valve.

k. Connect transmission pressure gage tube to transmission.

l. Remove plugs and connect transmission cooling and oil filter lines to transmission.

m. Refer to TM 10-3930-630-12 and adjust transmission linkage, if necessary.

n. Install front screen, battery box, battery, seat deck, seat support, operator's seat and floor an(l toe plates as described in TM 10-3930-630-12.

2-28. Front Drive Axle Removal

a. Refer to TM 10-3930-6:30-12 and remove the mast assembly.

b. Disconnect parking brake cable from parking brake and remove drive shaft and parking like

c. Disconnect brake hydraulic lines from wheels and tee at top of axle housing. Disconnect and remove lift cylinder hydraulic return line. Remove any clamps and wires present at drive axle.

d. Refer to TM 10-3930-630-12 and remove the tilt cylinder.

e. Remove nuts, screws and washers securing axle mounting pads to truck frame as illustrated in figure 2-9.

f. Use a hoist with a capacity of at least 6, 000 pounds to raise truck up away from the drive axle. Roll drive axle from beneath truck.

2-29. Front Drive Axle, Cleaning and Inspection

a. Clean the drive axle assembly with cleaning solvent (Fed. Spec. P-D-680). Dry thoroughly with compressed air.

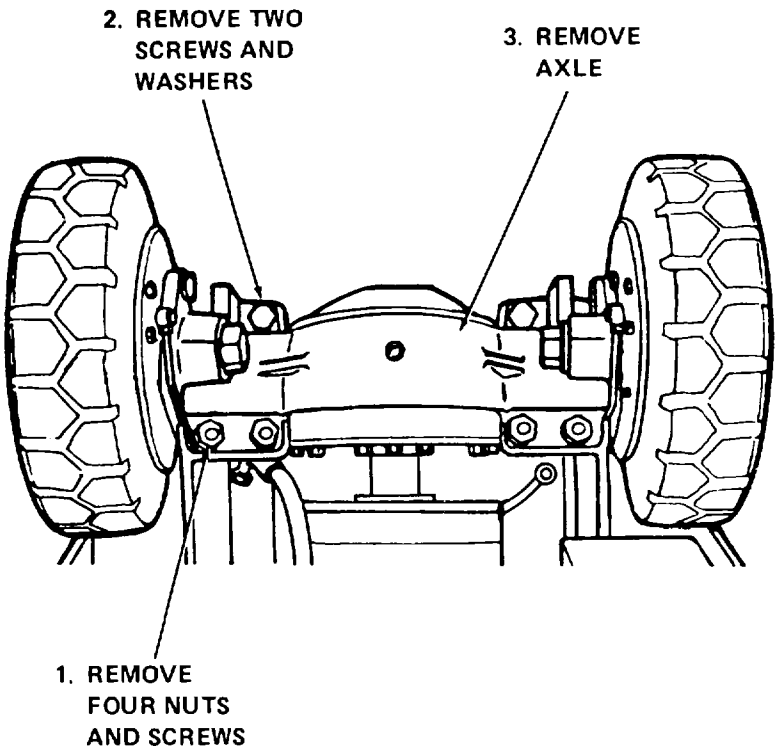

TA067381

Figure 2-9. Front drive axle, removal and installation

b. Check axle assembly for damage. Check all mounting hardware for defects.

2-30. Front Drive Axle Installation

a. Raise truck using a suitable hoist with a capacity of at least 6,000 pounds. Roll drive axle into position under truck. Align mounting pad dowel pins with correct mounting holes.

b. Carefully lower truck into position on drive axle. Refer to figure 2-9 and secure axle with screws, nuts and washers. Remove hoist and chain.

c. Refer to TM 10-3930-630-12 and install parking brake and drive shaft.

d. Connect brake hydraulic lines to wheels and to tee at top of axle. Refer to TM 10-39-30-630-12 and install lift cylinder hydraulic return line, clamps and wires.

e. Refer to TM 10-3930-630-12 and install mast assembly on lift truck.

2-31. Rear Steering Axle Removal

a. Attach a hoist with a capacity of at least 6,000 pounds to the truck and lift rear of truck high enough to gain access to the steering axle.

b. Refer to TM 10-3930-630-12 and remove floor and toe plates, rear wheels, steering cylinder and drag links.

c. Loosen lock nut (fig. 2-10) and back off adjusting screw.

d. Support steering axle with a suitable jack or blocking. Remove two mounting screws (fig. 2-10), lock washers and nuts securing axle housing to frame.

e. Lower jack and slide steering axle (fig. 2-10) with attached housing from beneath truck.

2-32. Rear Steering Axle Cleaning and Inspection

a. Clean the steering axle assembly with cleaning solvent (Fed. Spec. P-D-680). Dry thoroughly with compressed air.

b. Check steering axle assembly and all mounting hardware for damage.

2-33. Rear Steering Axle Installation

a. Lift rear of truck sufficiently and install steering axle into position. Jack axle up into place on truck. Slide ends of axle into self-aligning bearings in axle housing and frame (fig. 2-10) and secure axle housing to truck with two mounting screws, lock washers and nuts. Do not tighten completely.

b. Tighten adjusting screw (fig. 2-10) against spacer to a torque of 10 to 15 foot pounds (1.35 to

20.3 N•m). After adjustment, tighten lock nut to a torque of 90 to 100 foot pounds (122.2 to 135.5 N•m).

c. Tighten axle mounting nuts securely.

d. Refer to TM 10-3930-630-12 and install drag links, steering cylinder, rear wheels and floor and toe plates.

e. Remove the jacks and lower the truck and axle to the floor.

f. Refer to TM 10-3930-630-12 and adjust the spindle stop screws and pivot arm screws for correct steering operation.

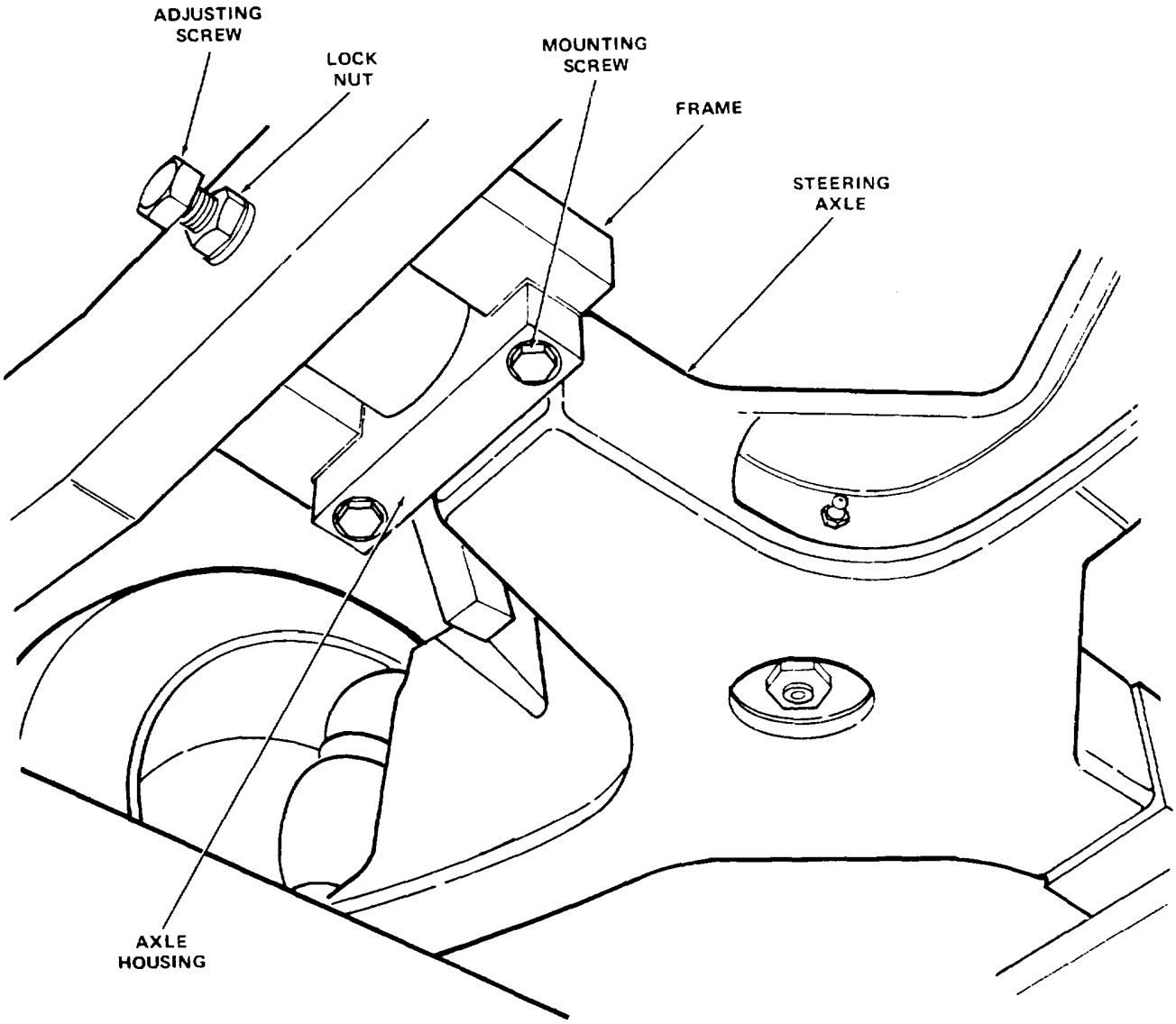

TA067382

Figure 2-10. Rear steering axle, removal and installation.

CHAPTER 3
REPAIR OF HYDRAULIC SYSTEM

Section I. TILT CYLINDER

3-1. Description

Tilt cylinders are connected to the outer mast and to the frame below the toe plate. Hydraulic pressure applied on either side of the cylinder rod will extend or retract the rod. As the rod extends it tilts the mast forward. As the rod is retracted the mast tilts backward. Refer to figure 3-1 for the hydraulic system schematic.

3-2. Tilt Cylinder, Removal and Disassembly

a. Removal. Refer to TMI 10-3930-630-12 and remove the tilt cylinder.

b. Disassembly. Disassemble the tilt cylinder in numerical sequence as illustrated on figure 3-2.

NOTE

The piston assembly (16) cannot be separated from the plunger rod and the two must be removed as an assembly.

3-3. Tilt Cylinder Cleaning, Inspection and Repair

a. Clean all metal parts in cleaning solvent (Fed. Spec. P-D-680). Dry thoroughly with dry compressed air.

b. Inspect cylinder tube bore for scoring or nicks. Remove nicks and scratches with fine emery cloth.

c. Check piston sliding surface for scoring, nicks or other damage. If damage is severe replace piston assembly. Minor scratches or nicks can be removed with fine emery cloth.

d. Check bore of gland nut and mating surfaces of plunger for damage which could cause faulty seating, leaks or damage to other parts.

e. Check all parts for cracks, bends, deformation, stripped threads, and other damage.

f. Replace all packings, wiper rings and damaged mating or sliding surface parts.

3-4. Tilt Cylinder, Reassembly and Installation

a. Reassembly. Reassemble the tilt cylinder in the reverse of numerical sequence as illustrated in figure 3-2.

b. Installation. Refer to TM 10-3930-630-12 and install and adjust the tilt cylinder and bleed the hydraulic system.

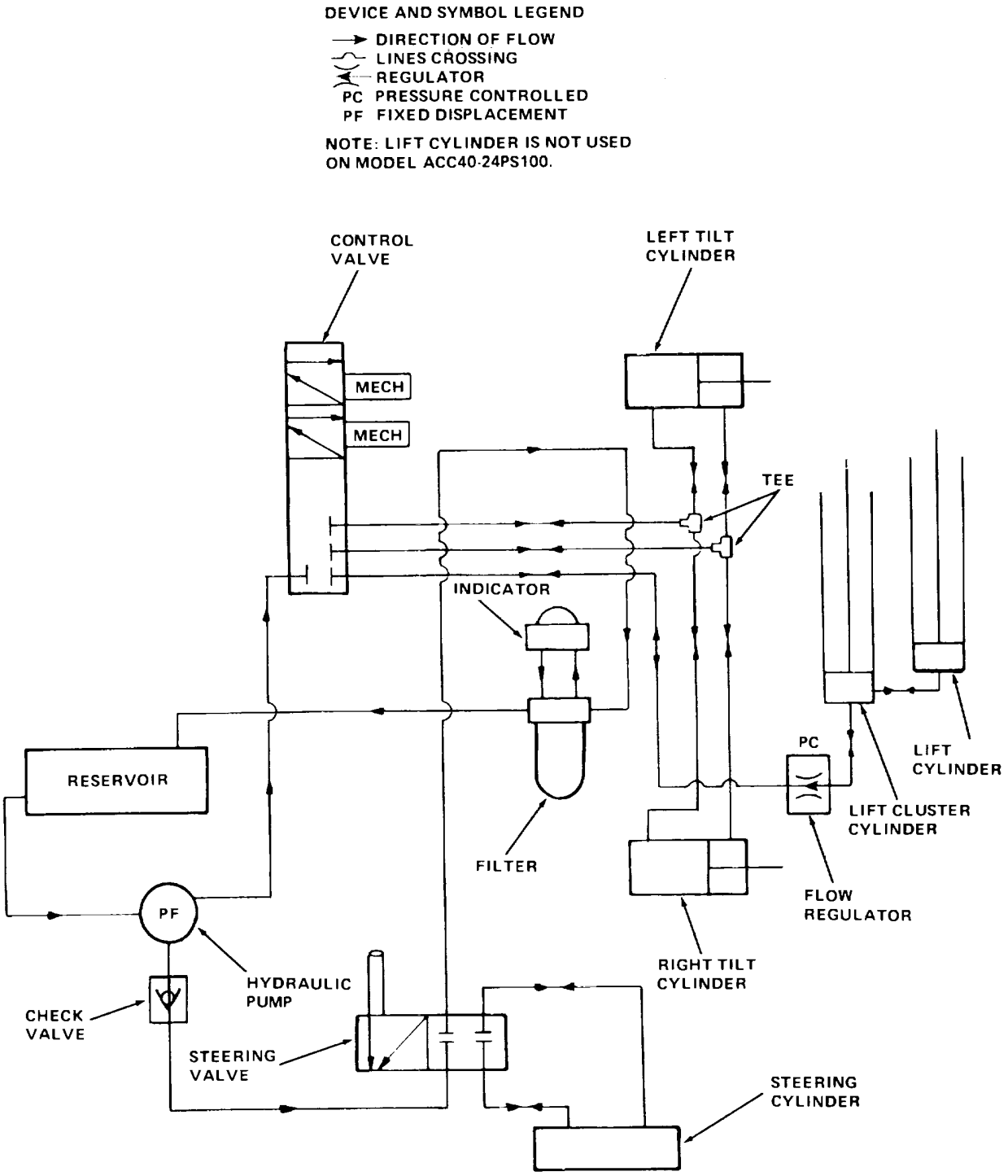

TA067383

Figure 3-1. Hydraulic system diagram.

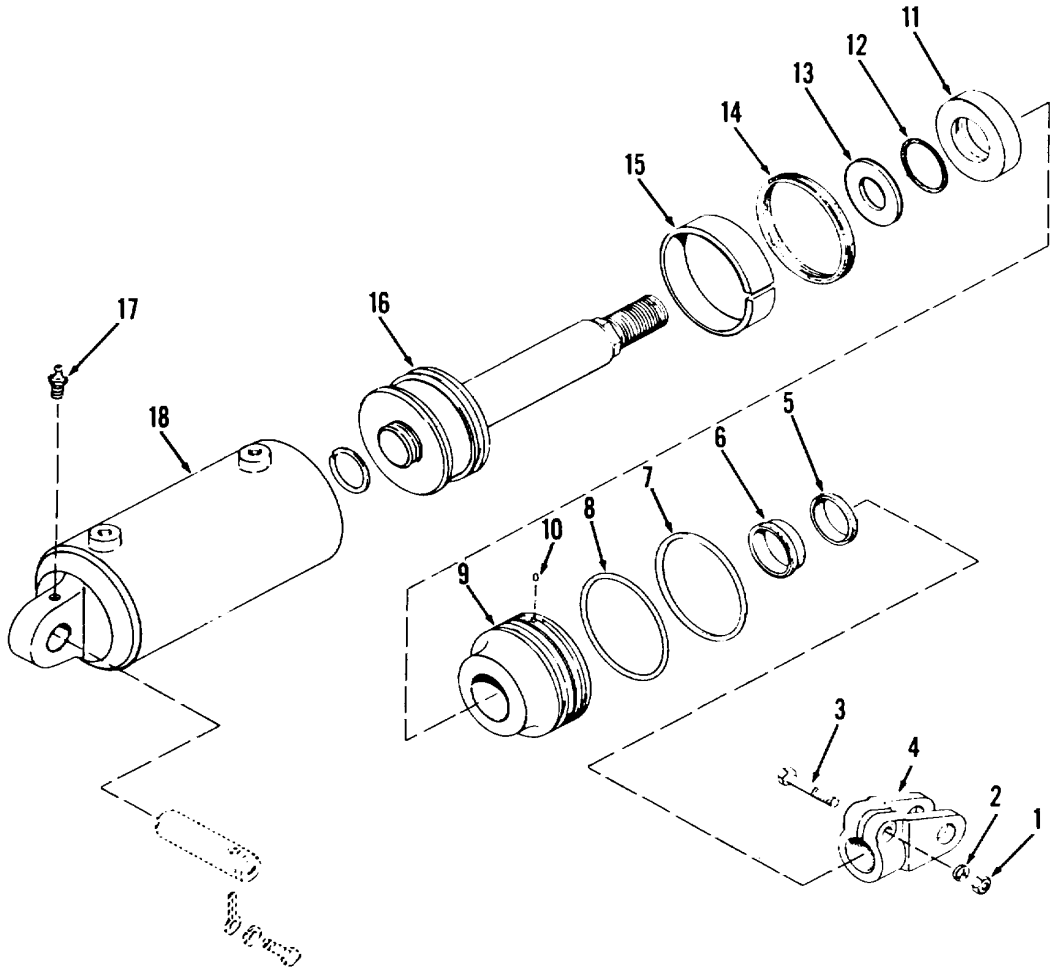

1 Nut	7 Backup ring	13 Spacer
2 Lock washer	8 Packing	14 Packing
3 Screw	9 Gland nut	15 Bearing
4 Yoke	10 Pellet	16 Piston assembly
5 Wiper	11 Spacer	17 Lubrication fitting
6 Packing	12 Packing	18 Tube

TA067384

Figure 3-2. Tilt cylinder, disassembly and reassembly.

Section II. CLUSTER CYLINDER

3-5. Description

The cluster cylinder is three cylinders in one housing. Extension of the outer cylinders raises the carriage. Forcing the center cylinder ram down raises the cylinder, carriage and inner mast.

3-6. Cluster Cylinder, Removal and Disassembly

a. Removal. Refer to TM 10-3930-630-12 and remove the cluster cylinder.

b. Disassembly. Disassemble the cluster cylinder in numerical sequence as illustrated in figure 3-3.

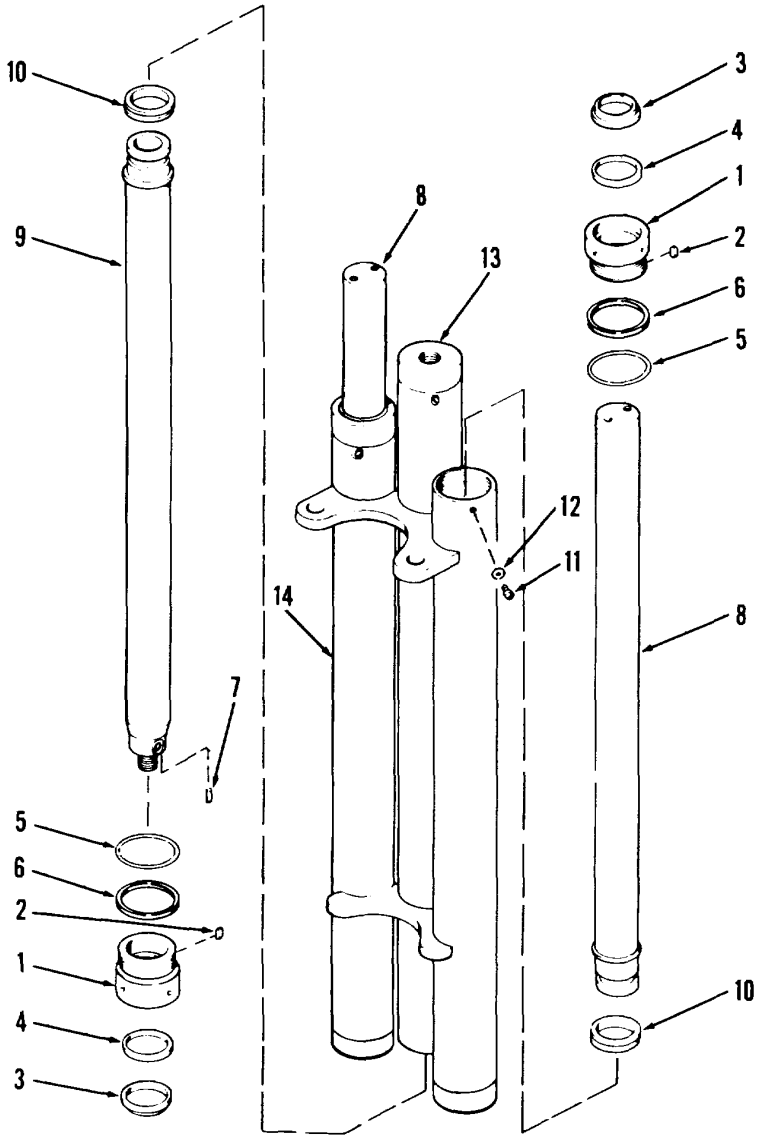

1 Gland nut
2 Pellet
3 Wiper ring
4 Packing
5 Packing
6 Backup washer
7 Spring pin
8 Outer ram
9 Center ram
10 Wear ring
11 Bleed screw
12 Washer
13 Center ram
14 Tube

TA067385

Figure 3-3. Cluster cylinder, disassembly and reassembly.

3-7. Cluster Cylinder, Cleaning, Inspection and Repair

a. Clean all metal parts with cleaning compound, solvent (Fed. Spec. P-D-680). Dry thoroughly with dry compressed air.

b. Inspect parts for excessive wear or damage. Remove nicks and scratches with fine emery cloth.

c. Replace all packings, wiper rings and backup rings regardless of condition. Replace all other unserviceable parts as authorized.

3-8. Cluster Cylinder, Reassembly and Installation

a. Reassembly. Reassemble the cluster cylinder in the reverse numerical sequence as illustrated in figure 3-3.

b. Installation. Refer to TM 10-3930-630-12 and install the cluster cylinder and bleed the hydraulic system.

Section III. SINGLE LIFT CYLINDER

3-9. Description

The single lift cylinder, used only on the Model ACC40-24PS180 trucks, operates in conjunction with the cluster cylinder. When the inner mast and cluster cylinder have reached the limits of their upward travel, the single lift cylinder is actuated. Extension of the single cylinder ram elevates the intermediate mast, inner mast and carriage.

3-10. Single Lift Cylinder, Removal and Disassembly

a. Removal. Refer to TM 10-3930-630-12 and remove the single lift cylinder.

b. Disassembly. Disassemble the single lift cylinder in numerical sequence as illustrated in figure 3-4.

3-11. Single Lift Cylinder, Cleaning, Inspection and Repair

a. Clean all metal parts with cleaning compound, solvent (Fed. Spec. P-D-680). Dry thoroughly with dry compressed air.

b. Inspect parts for excessive wear or damage. Remove nicks and scratches with fine emery cloth.

c. Replace all packings, wiper rings and backup rings regardless of condition. Replace all other' unserviceable parts as authorized.

3-12. Single Lift Cylinder, Reassembly and Installation

a. Reassembly. Reassemble the single lift cylinder in the reverse numerical sequence as illustrated in figure 3-4.

b. Installation. Refer to TM 10-3930-630-12 and install the single lift cylinder and bleed the hydraulic system.

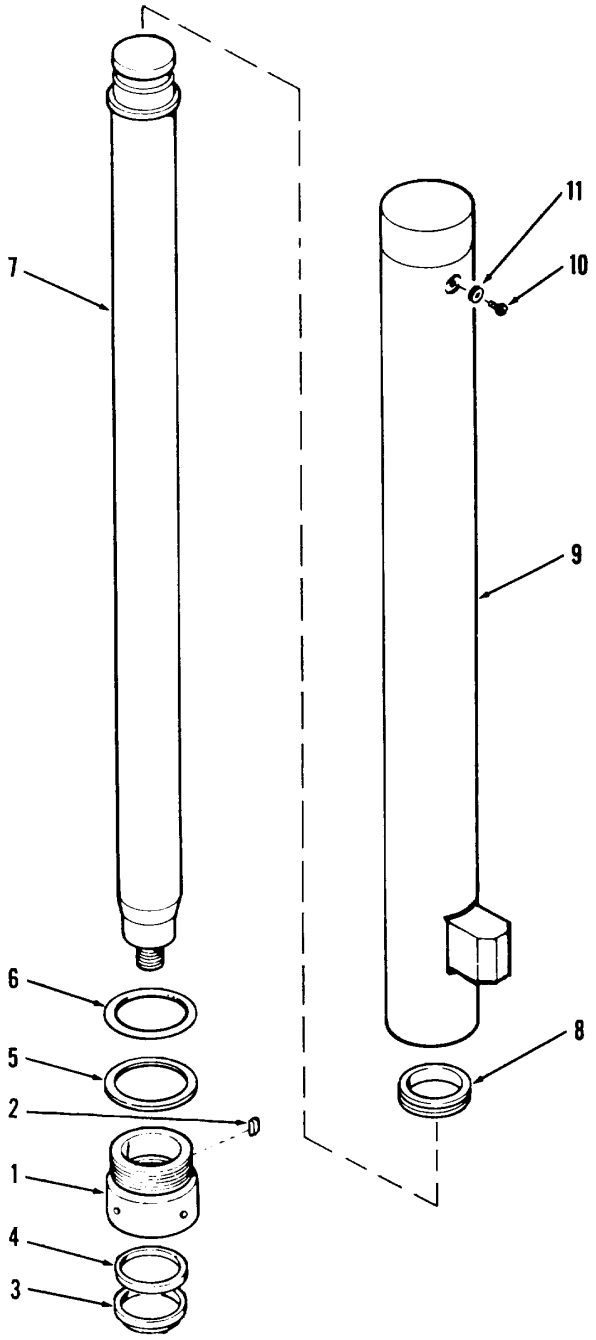

1 Gland nut
2 Pellet
3 Wiper ring
4 Packing
5 Backup ring
6 Packing
7 Ram
8 Wear ring
9 Tube
10 Bleed screw
11 Nylon washer

TA067386

Figure 3-4. Single lift cylinder, disassembly and reassembly.

Section IV. HYDRAULIC RESERVOIR

3-13. Description

The hydraulic reservoir is mounted on the right side of the frame. Hydraulic oil is stored in the reservoir for use in the hydraulic system. The reservoir is of welded steel construction.

3-14. Hydraulic Reservoir, Removal and Disassembly

a. Removal. Refer to TM 10-3930-630-12 and remove the hydraulic reservoir.

b. Disassembly. Disassemble the hydraulic reservoir in numerical sequence as illustrated in figure 3-5.

3-15. Hydraulic Reservoir, Cleaning, Inspection and Repair

a. Flush reservoir (10, fig. 3-5) with cleaning compound, solvent (Fed. Spec. P-D-680). Dry thoroughly with compressed air.

b. Inspect tank for rust, cracked seams or damaged threads. If damage is such that repair by welding is possible, flush tank thoroughly to remove all traces of explosive solvents, both liquid and vapor. Weld per recommended specification (para 2-10).

NOTE

Reservoir must be thoroughly cleaned and flushed after repair.

c. Inspect all parts for ,damage and replace as authorized. If tank damage is beyond reasonable welding repair, replace tank.

d. Clean breather and gage screen reverse flow of hydraulic fluid or compressed air

3-16. Hydraulic Reservoir, Reassembly and Installation

a. Reassembly. Reassemble the hydraulic reservoir in the reverse numerical sequence as illustrated in figure 3-5.

b. Installation. Refer to, TM 10-3930-630-12 to install the hydraulic reservoir and bleed the hydraulic system.

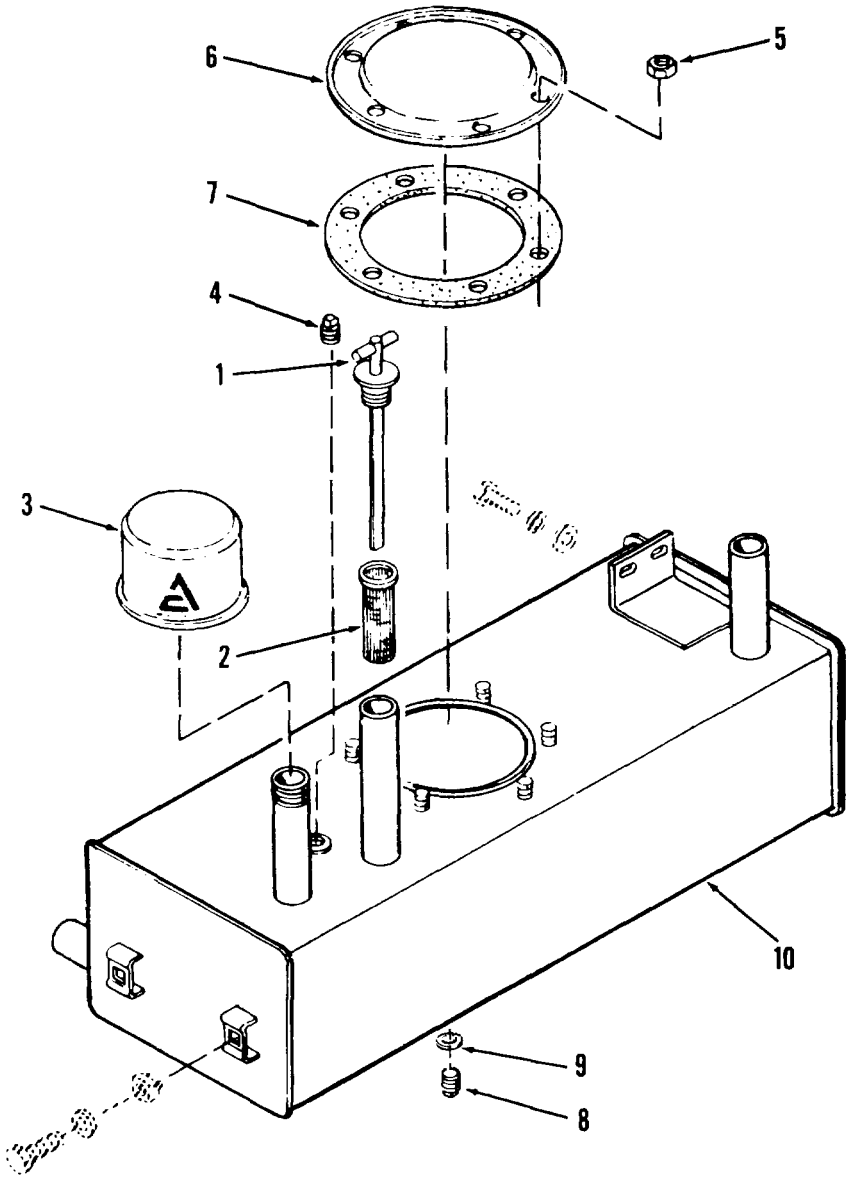

1 Level gage	6 Cover
2 Screen	7 Gasket
3 Breather	8 Drain plug
4 Plug	9 Washer
5 Nut	10 Reservoir

TA067387

Figure 3-5. Hydraulic reservoir, disassembly and reassembly.

Section V. HYDRAULIC CONTROL VALVE

3-17. Description

The hydraulic control valve is mounted at the forward right side of the frame beneath the right cowl. Operating levers connected to the control valve allow the operator to perform lift and tilt operations.

3-18. Hydraulic Control Valve, Removal and Disassembly

a. Removal.

(1) Refer to TM 10-3930-630-12 and disconnect the hydraulic control valve linkage.

(2) Remove hydraulic control valve as illustrated in figure 3-6.

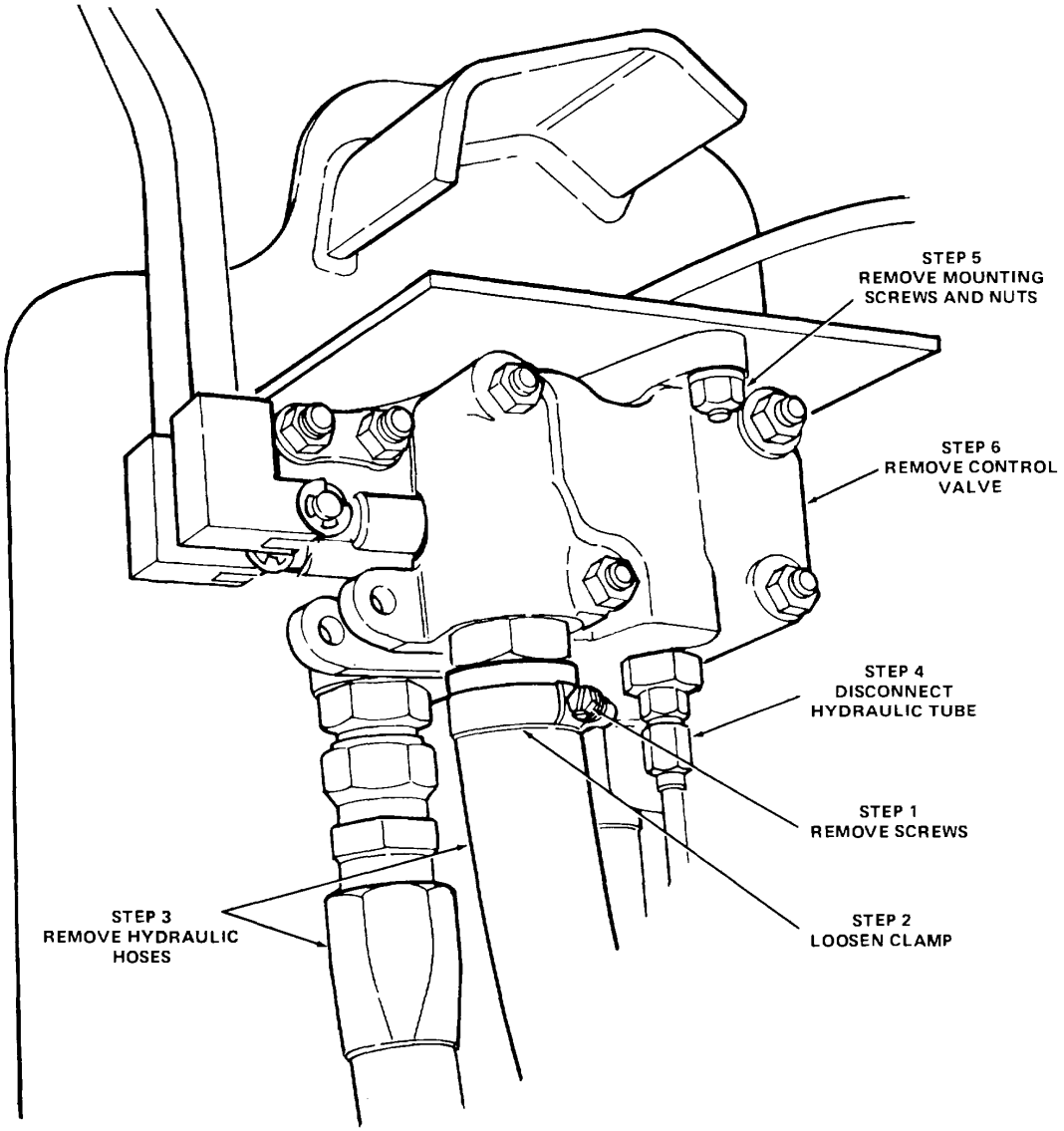

Figure 3-6. Hydraulic control valve, removal and installation.

TA067388

(3) Place the hydraulic control valve on a clean work bench.

b. Disassembly.

NOTE

Particular attention should be given to identification of parts for reassembly as spools are selectively fitted to valve bodies and must be replaced in their original position. Valve sections must be reassembled in the same order.

(1) Remove four nuts (1, fig. 3-7) and screws (2) and separate the valve sections (23 and 39). Remove and discard packings (3 and 4) and seals (5) from between valve sections. Do not lose retainers (6) and shims (7).

(2) Remove two screws (8) and lift retainer (9) from the tilt section.

(3) Remove sleeve (10) from tilt section bore and remove packing (11) from the sleeve.

(4) Slide spool (12) out of bore and remove packings (13 and 15) and backup ring (14) from the grooves in the spool. Do not remove the centering spring (16) or washers (17) unless replacement is necessary.

(5) Grip the stem of check valve plug (18) with a pliers and pull plug from the body of lift section (23).

(6) Remove packing (19) and backup ring (20) from plug (18). Remove spring (21) and ball (22) from the body of tilt section (23).

(7) Remove two screws (24) and remove retainer (25) from lift section (39).

(8) Remove sleeve (26) from lift section bore and remove packing (27) from the sleeve.

(9) Slide spool (28) out of the lift section bore and remove packings (29 and 31) and backup ring (30). Do not remove centering spring (32) or washer (33) unless replacement is necessary.

(10) Grip the stem of check valve plug (34) with a pliers and pull plug from the body of lift section (39).

(11) Remove packing (35) and backup ring (36) from plug (34). Remove spring (37) and ball (38) from the body of lift section (39).

(12) To remove relief valve in lift section (39), screw out plug (40) which retains relief valve (43). Remove packing (41) from plug and discard packing.

(13) Remove spring (42) and relief valve (43) from valve lift section.

(14) Remove plug (44) and remove and discard packing (45).

3-19. Hydraulic Control Valve, Cleaning, Inspection and Repair

a. Clean all metal parts in cleaning compound, solvent (Fed. Spec. P-D-680). Dry thoroughly with compressed air.

b. Inspect mating surfaces of section bodies for paint or burring. Remove by light lapping.

c. Inspect valve spools and bores for burs and scoring. If burs or scoring are present remove with crocus cloth. If scoring is excessive the valve body and spool must be replaced.

d. If springs were removed check for cracks, wear, deformation or signs of weakness.

e. Inspect valve sections for cracks, stripped threads or other damage. Replace all defective parts as authorized.

3-20. Hydraulic Control Valve, Reassembly and Installation

a. Reassembly

NOTE

Coat all parts with hydraulic oil (OE/HDO) to facilitate assembly and provide initial lubrication.

(1) Install a new packing (45, fig 3-7) on plug(44) and install plug in lift section (39) of control valve. Tighten plug securely but do not overtighten.

(2) Install a new packing (41) on relief valve plug (40). Place relief valve (43) in bore of lift section, hex nut end up. Install spring (42) and plug (40). Tighten plug securely, but do not over tighten.

(3) Install a new backup ring (36) and packing (35) on the check valve Plug (34) with the packing toward the spring and ball. Place ball (38) and spring (37) in lift section body and install plug (34). Be certain the hole in plug (34) lines up with the stud hole in the body of lift section (39).

(4) If the centering spring (32) was removed, install spring (32) and washers (33) on spool (28).

(5) Install new packing (29 and 31) and backup ring (30) in the grooves on the spool (28) in the bore of lift section (39).

(6) Install new packing (27) in sleeve (26) and install sleeve (26) and retainer (25). Install two screws (24) and tighten securely.

(7) Install a new backup ring (20) and packing (19) on check valve plug (18). Packing (19) must be installed towards spring (21).

(8) Place ball (22) and spring (21) in tilt section (23) and install plug (18). Be certain the hole in plug (18) lines up with the stud hole in the body of tilt section (23).

(9) If centering spring (16) was removed, install spring (16) and washers (17) on spool (12).

(10) Install packing (13 and 15) and backup ring (14) in the grooves on spool (12). Install spool (12) in the bore of tilt section (23).

(11) Install new packing (11) on sleeve (10) and install sleeve (10) and retainer (9). Install two screws (8) and tighten securely.

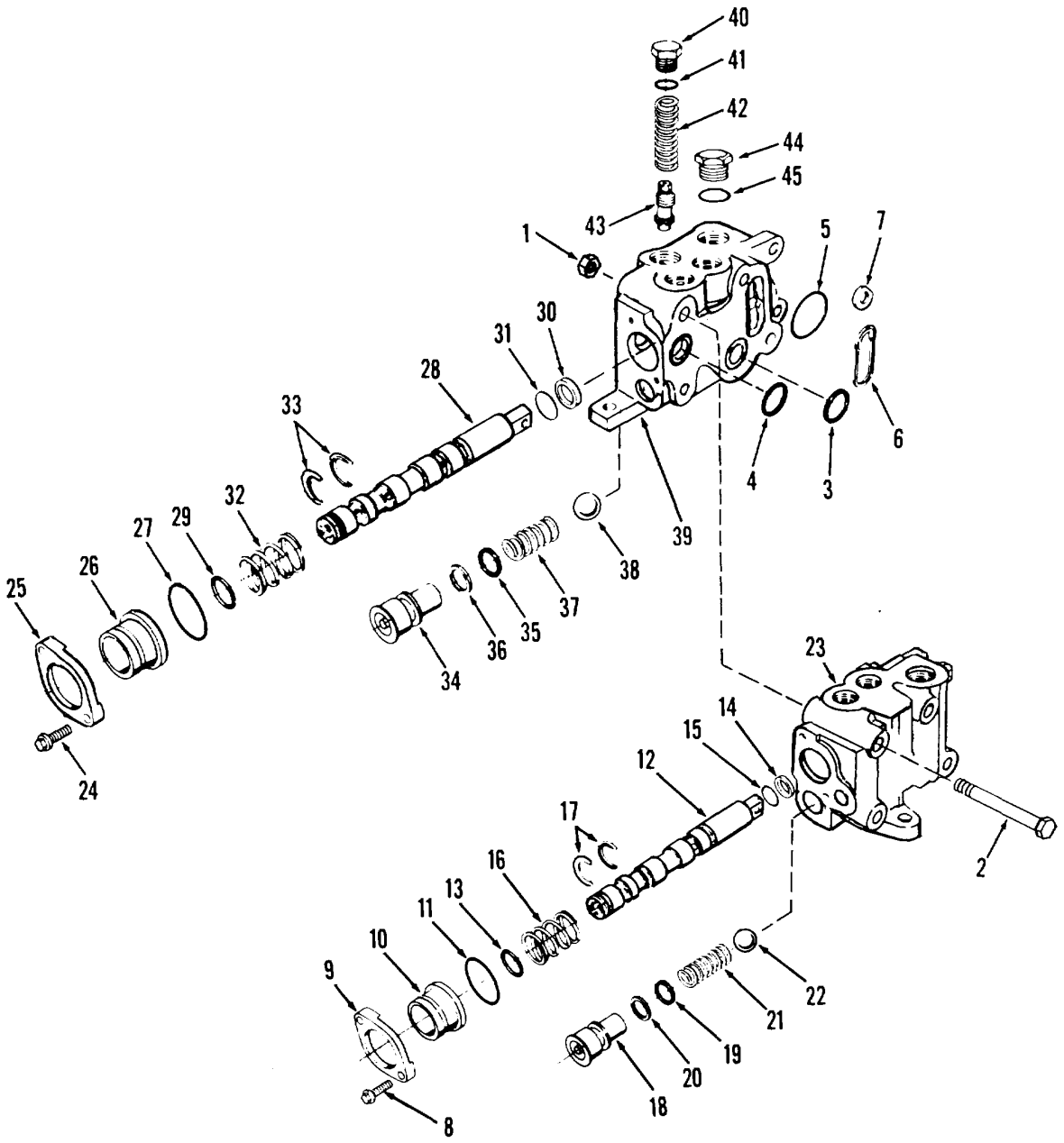

1 Nut	10 Sleeve	19 Packing	28 Spool	37 Spring
2 Screw	11 Packing	20 Backup ring	29 Packing	38 Ball
3 Packing	12 Spool	21 Spring	30 Backup ring	39 Lift section
4 Packing	13 Packing	22 Ball	31 Packing	40 Plug
5 Seal	14 Backup ring	23 Tilt section	32 Spring	41 Packing
6 Retainer	15 Packing	24 Screw	33 Washer	42 Spring
7 Shim	16 Spring	25 Retainer	34 Plug	43 Valve
8 Screw	17 Washer	26 Sleeve	35 Packing	44 Plug
9 Retainer	18 Plug	27 Packing	36 Backup ring	45 Packing

Figure 3-7. Hydraulic control valve, disassembly and reassembly.

(12) Turn lift section (39) on its side and install new packings (3 and 4), seal (5), retainer (6) and shim (7) in the grooves in the body. Use petroleum jelly to hold seals in place.

(13) Carefully place tilt section (23) in position on top of lift section (39).

(14) Coat screw threads with Loctite and install four screws (2) through both sections. Install four nuts (1) and torque to 15 foot pounds (20.3 N

b. Installation.

(1) Install plugs, poppets, and adapters re- moved before disassembly.

(2) Position control valve on support (fig. 3-6) and secure with three screws, lock washers and nuts.

(3) Uncap and connect hydraulic lines to control valve.

(4) Refer to TM 10-3930-630-12 and connect the control valve lever linkage.

(5) Operate control levers for approximately 5 minutes to eliminate any air present in the system. Refer to TM 10-3930-630-12 and bleed the hydraulic system.

3-21. Hydraulic Valve, Pressure Check

a. Remove right hand cowl to gain access to the control valve.

b. Disconnect the hydraulic hose at the inlet port of the control valve and install a tee fitting on the tube. Connect fitting to adapter in the inlet port. (See figure 3-8.)

c. Install a pressure gage with a 0 to 3000 psi (210.9 kg/cm2) range in the tee.

d. Place shift lever in neutral position, turn ignition switch on and start engine. Pull tilt lever back to retract lift cylinders and hold lever in this position.

e. Observe the needle on the pressure gage. When pressure reading of 1950 psi is reached, the needle should stop, indicating relief valve opening.

f. If relief valve opens below or above 1900 to 2000 psi (133.5 to 140.6 kg/cm2), it must be corrected as follows:

(1) Turn ignition switch off.

(2) When pressure reads zero, remove relief valve plug and remove valve spring and relief valve assembly. Inspect parts for damage and replace defective parts.

(3) Install valve assembly, new spring and plug with new packing.

g. Repeat steps *d* and *e* of this paragraph.

h. Turn ignition switch off and remove pressure gage and tee. Connect hydraulic hose to the fitting at the inlet port of the control valve.

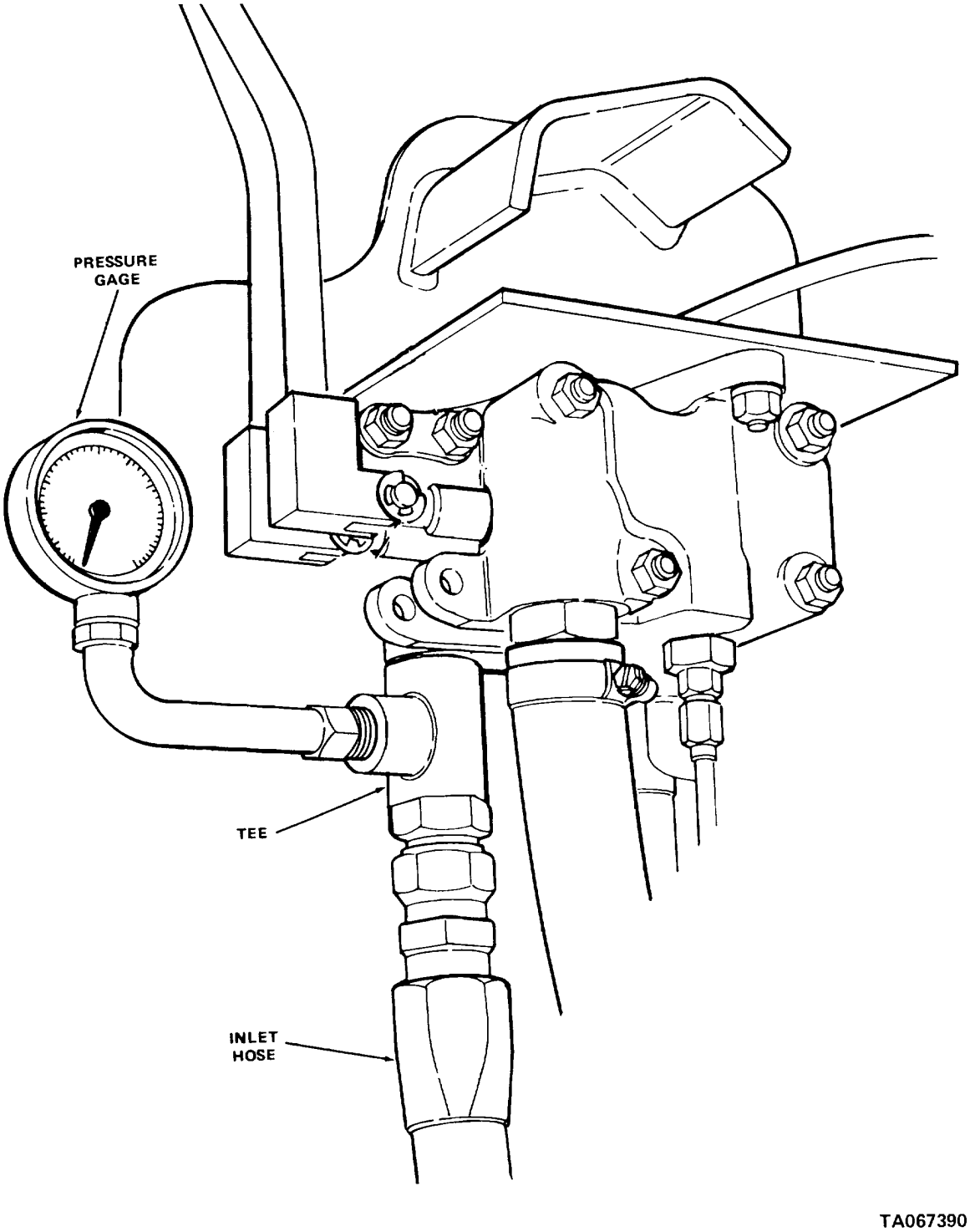

Figure 3-8. Hydraulic control valve pressure check.

Section VI. HYDRAULIC PUMP

3-22. Description

a. The hydraulic pump supplies hydraulic oil under pressure to operate the hydraulic components. The gear type pump is directly driven by the engine crankshaft.

b. Oil is drawn from the reservoir through a suction line. The oil is then delivered to the control valve and steering gear valve for distribution to the cylinders.

3-23. Hydraulic Pump, Removal and Disassembly

a. Removal. Refer to paragraph 2-12 and remove the hydraulic pump.

b. Disassembly. Disassemble the hydraulic pump in numerical sequence as illustrated in figure 3-9.

NOTE

If bushings (9 and 13) stick, tap body on a piece of wood to prevent marring mating surfaces. Care must be taken not to damage surface of the bushings.

3-24. Hydraulic Pump, Cleaning, Inspection and Repair

a. Clean all metal parts in cleaning compound solvent (Fed. Spec. P-D-680). Dry thoroughly with compressed air.

b. Using a 2-inch (50.8 mm) inside micrometer check the bushing bores near the front of the housing. If bores measure over 1.770 inch (44.9 mm), discard the pump body.

NOTE

This is an indication that pump has been subjected to excessive pressure and the system must be checked to determine the cause.

c. Inspect parts for nicks and burs. Remove with emery cloth if possible. If damage is severe, replace parts.

d. Inspect inside of bores for burs and remove with emery cloth.

e. Place a straightedge across the machined mating surface of the flange. If the flange is bowed, replace flange.

NOTE

Bowing of flange is caused by excessive pressures and the cause must be determined before installing the pump.

f. Hone flange mating surface to remove burs, scratches or other damage. Clean thoroughly.

g. Inspect drive gear and idler gear for damaged or worn splines or gear teeth. Remove burs with a fine hone.

h. If length of gear is less than 1.320 inch (33.5 mm) or if gear outside diameter is less than 1.754 inch (44.5 mm), the gear must be replaced. Replace gear assemblies if journal surfaces are blackened. Shafts and gears must be replaced as assemblies.

i. Inspect bushings for scratches or cuts. Minor scratches can be removed by honing in a circular motion with a fine stone. Check to be certain sharp edge between face of bushing and the outside diameter is not broken.

j. The bore of the bushing, which will be worn slightly oval, must not measure over 0.881 inch (22.3-mm) at the largest reading. The length of the bushing must not measure under 1.055 inch (26.7-mm). If these tolerances are not met the bushings must be replaced.

k. Wash spool valve and dry with compressed air. Valve must slide freely in and out of its bore. Check diameter of all lands and replace spool if any are less than 0.748 inch (18.9 mm). Clean orifices with a fine wire.

l. Check valve spool spring for bends, cracks or deformation. Replace spring if free length is less than 3.5 inch (88.9 mm).

m. Inspect the relief valve plunger for wear and erosion. Replace if damaged.

n. Inspect relief valve spring for bends, cracks or deformation. If free length is less than 0.80 inch (20.3 mm), replace spring.

3-25. Hydraulic Pump, Reassembly and Installation

a. Reassembly.

(1) Before reassembling the pump check to be certain all parts are clean and dry.

(2) Place pump body (30, fig. 3-9) face up and install body dowels (29). Tap in place with a plastic hammer. Coat body bores with light oil (OE/HDO).

(3) Place new packings (15) and wear rings (16) on the shoulder of rear bushings (13). Hold in place with grease if necessary. Coat faces and bores of the bushing with light oil. Be sure bushings (13) bottom in body (30) and wear rings do not fall off. Place dowel (14) in bushing holes and holding bushings (13) together, carefully align them and slide them into the bores.

NOTE

Do not force bushings into bores. They must slide to the bottom of the bore with hand pressure.

(4) Coat gear shafts and gear faces lightly with oil (OE/HDO). Turn pump body so that bore for spool (28) is to the left and place drive gear (11) in top bore and idler gear (12) in lower bore.

(5) Position front bushing dowel pin (10) between bushings (9), hold bushings together and

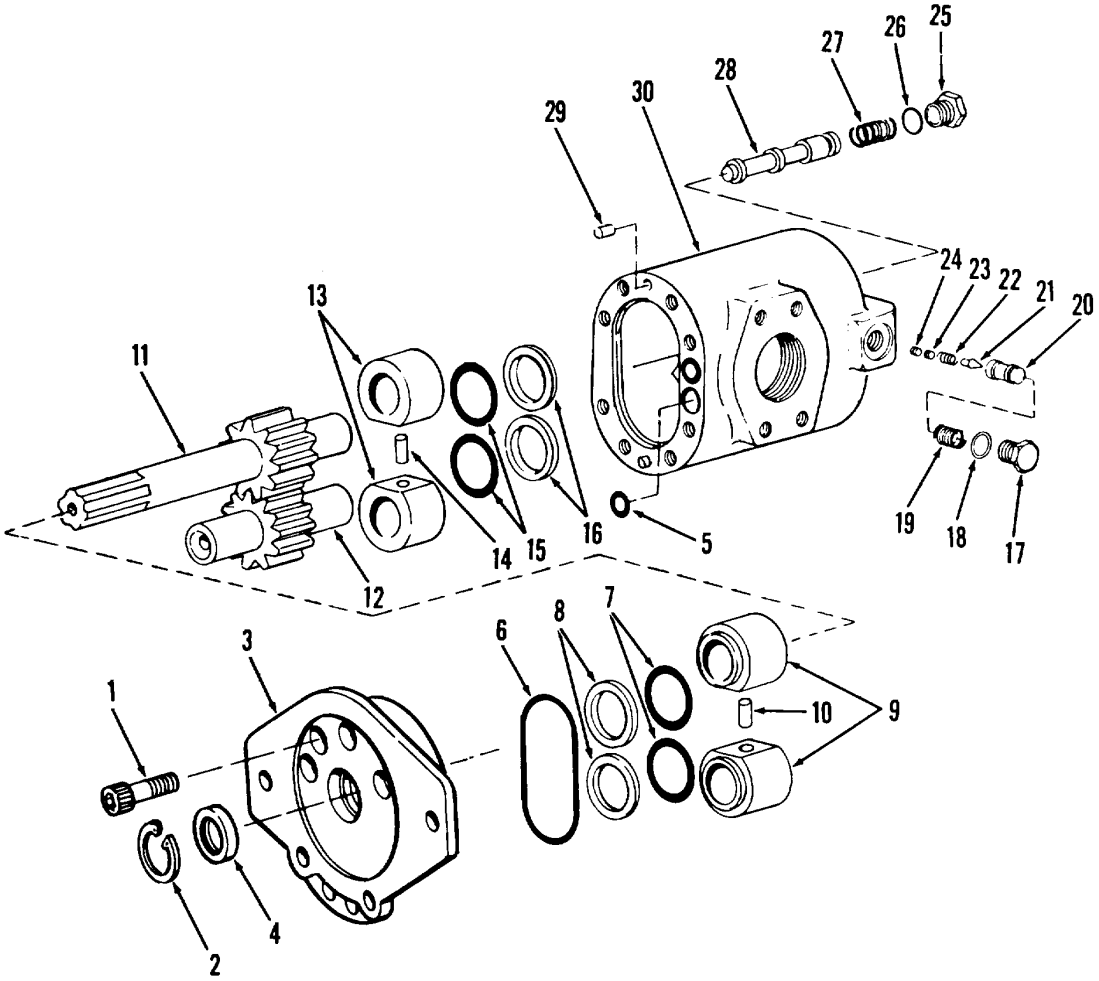

1 Screw	7 Packing	13 Bushing	19 Spring	25 Plug
2 Retaining ring	8 Wear ring	14 Dowel pin	20 Spool	26 Packing
3 Flange	9 Bushing	15 Packing	21 Cone	27 Spring
4 Seal	10 Dowel pin	16 Wearing	22 Spring	28 Spool
5 Packing	11 Drive gear	17 Plug	22 Setscrew	29 Dowel pin
6 Packing	12 Idler gear	18 Packing	24 Setscrew	30 Body

Figure 3-9. Hydraulic pump, disassembly and reassembly.

insert face down into the pump bores. Place new packing (7) and wear ring (8) on the shoulder of bushing (9).

(6) Position two new drain packings (5) in the recesses in the face of pump body (30) and place new body packing (6) in its recess around the bushings.

(7) Coat valve spool (28) with oil (OE/HDO) and install spring (27) on spool (28). Install spool (28) (spring end last) into the valve bore. Install plug (25) with new packing (26).

(8) Install new flange oil seal (4) and install flange (3) on pump body (30). Secure with retaining ring (2) and screws (1). Tighten screws firmly. Turn shaft to see if it has some drag, but can still be turned by hand.

(9) Install setscrews (24 and 23), spring (22), cone (21), spool (20) and spring (19) into relief valve bore. Install new packing (18) on plug (17) and tighten plug until it bottoms.

b. Installation.

(1) Refer to paragraph 2-14 and install the hydraulic pump. Refer to TM 10-3930-630-12 and bleed the hydraulic system.

(2) Check the hydraulic oil level. Run pump for one minute at no load, idle speed, to allow the

system to fill. Check for pressure of air leaks in the system. After running for one minute, shut engine off and recheck oil level. If low, fill to proper level. Refer to LO 10-3930-630-12 for proper grade oil.

(3) Refer to paragraph 3-21 and set the main hydraulic relief pressure (in control valve) to 1900 to 2000 psi (133.5 to 140.6 kg/cm2)

3-26. Hydraulic Pump, Relief Valve Adjustment

a. Install a pressure gage (2000 psi) (140.6 kg/cm2) in the pressure side of the steering circuit.

b. Operate pump at full engine speed, and turn the steer wheels to their limit. The opening pressure must be set at 1100 psi (77.3 kg/cm2). Adjust the pump relief valve setscrew in or out to set opening pressure.

NOTE

Always start the hydraulic pump under no load conditions to prolong pump life.

Section VII. MAST AND CARRIAGE

3-27. Description

The mast and carriage support, and lift the load. Both are of welded construction. Studs to mount the bearings are welded to the mast and carriage.

3-28. Hydraulic Carriage, Removal and Disassembly

a. Removal. Refer to TM 10-3930-630-12 and remove the carriage.

b. Disassembly. Disassemble the carriage in numerical sequence as illustrated on figure 3-10.

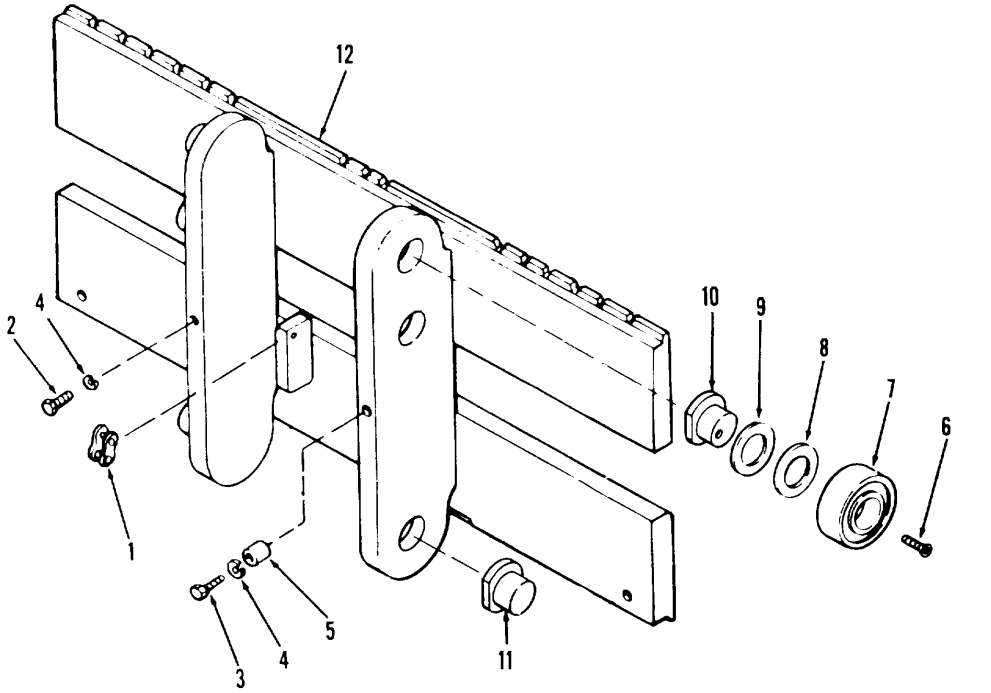

1 Chain link	7 Bearing
2 Screw	8 Shim
3 Screw	9 Shim
4 Cock washer	10 Stud
5 Spacer	11 Stud
6 Screw	12 Carriage frame

Figure 3-10. Hydraulic carriage, disassembly and reassembly.

3-29. Hydraulic Carriage, Cleaning, Inspection and Repair

a. Clean parts with cleaning, compound solvent (Fed. Spec. P-D-680).

b. Inspect backrest for cracked or broken welds, and any bends or wear which could interfere with heavy use.

c. Inspect carriage frame for cracked or broken weldments, unusual wear or bending and misalignment of vertical carriage supports.

NOTE

Examine stud weldments closely.

d. Repair parts by welding, if practical. When welding bearing studs use the procedure outlined below.

NOTE

The following procedures apply to carriage and mast bearing studs.

(1) Remove the filler metal from around the stud using a small, round grinder. Do not make any passes into the mast channel or carriage support. Remove the stud from the channel or support.

(2) Prepare the welding surface by removing all foreign material such as rust, scale, grease, etc. Any part that may be damaged by heat should be removed before welding.

(3) Locate, tilt and align new stud on mast channel or support. Refer to figure 3-11 or 3-12 for dimensions and stud locations.

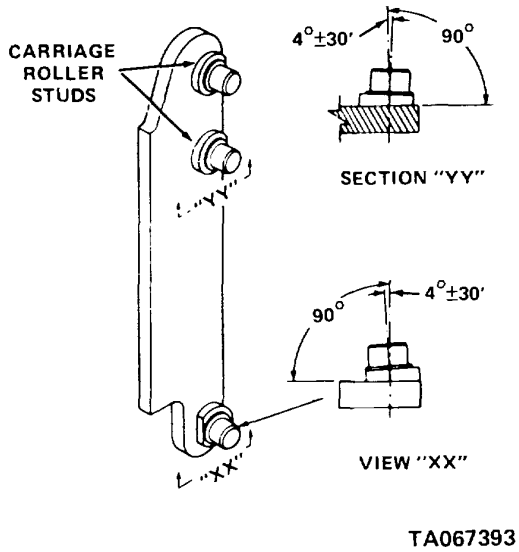

Figure 3-11. Carriage roller and stud locations.

(4) Comply with the following welding specifications using bearing stud welding procedure shown on figure 3-13.

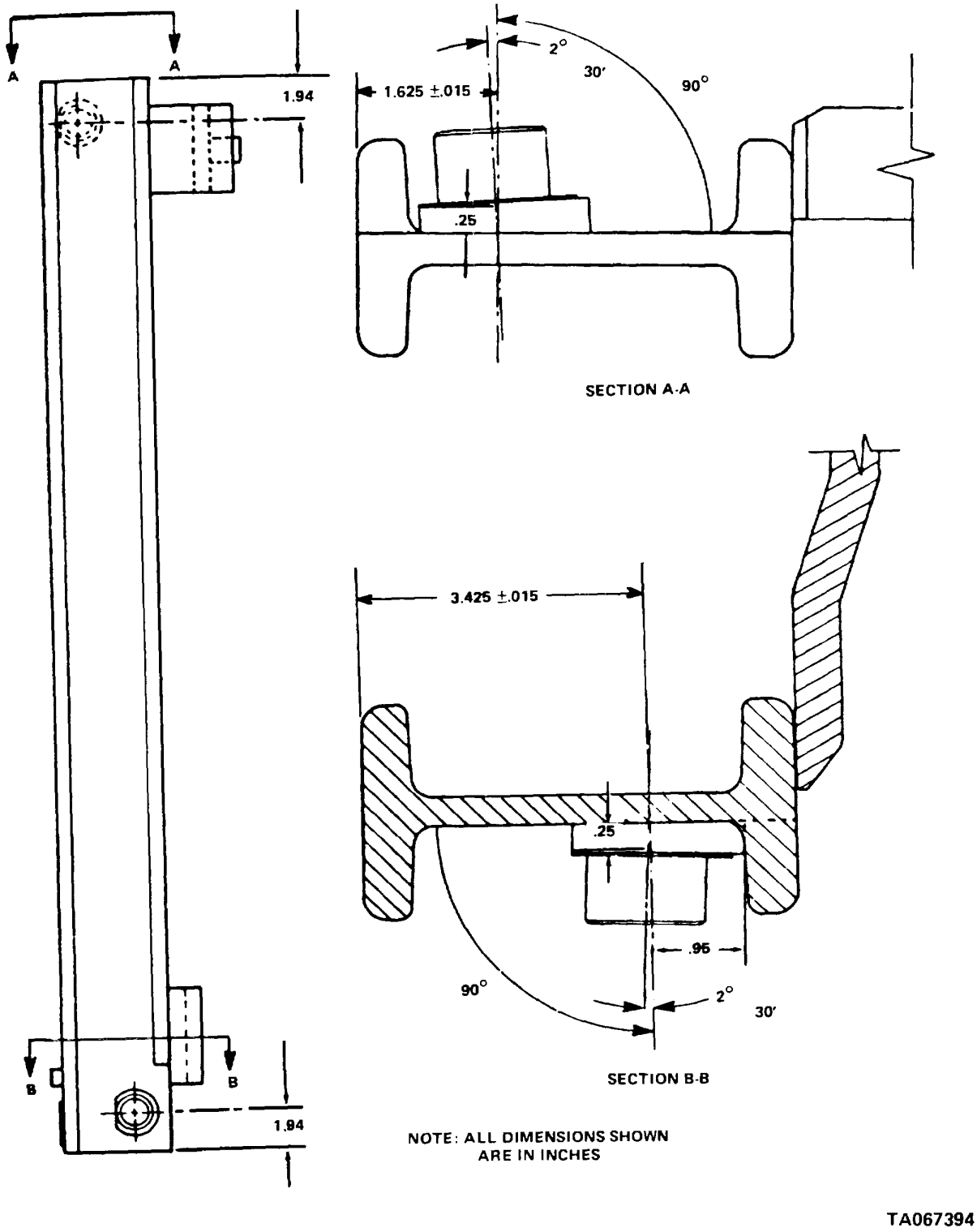

Figure 3-12. Mast stud bearing locations.

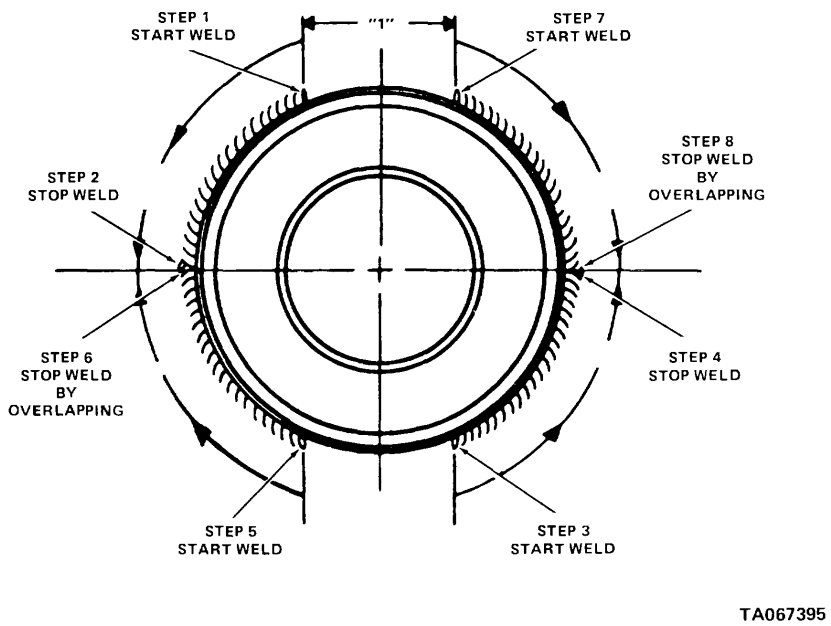

Figure 3-13. Bearing stud welding procedure.

Process.....	Shielded metal arc
Equipment.....	Manual
Settings:	
Current.....	A.C.
Amps	275/375
Volts.....	31/33
Base metals	(1) AC 1035-P-1
.....	(2) AC 86L20H (roller stud)
Plate thickness range	3/8 to 1 inch (9.5 to 25.4 mm)
Electrode:	
Type	Stick
Class	E 7018 (hydrogen free)
Size	3/8 inch (9.5 mm)
Flux	Electrode covering
Weld type and size.	1/4 inch (6.3 mm) fillet
Number of passes	1
Position.....	Horizontal
Preheat.....	400 degrees F (205°C)
Interpass.....	250 degrees F (121°C)
Postheat	None

(5) When welding is completed remove all slag, weld spatter and excess weld material.

(6) Remove the defective material with a small round grinder in 0.010-0.020 inch (0.25 to 0.50 mm) passes. Inspect for defects after each pass.

3-30. Hydraulic Carriage, Reassembly and Installation

a. Reassembly. Reassemble the carriage in the reverse of numerical sequence as illustrated in figure 3-10.

b. Installation. Refer to TM 10-3930-630-12 and install the hydraulic carriage and backrest.

3-31. Mast Assembly, Removal and Disassembly

a. Removal. Refer to TM 10-3930-630-12 and remove the mast.

b. Disassembly. Refer to TM 10-3930-630-12 and disassemble the mast. Refer to figure 3-14 for mast components.

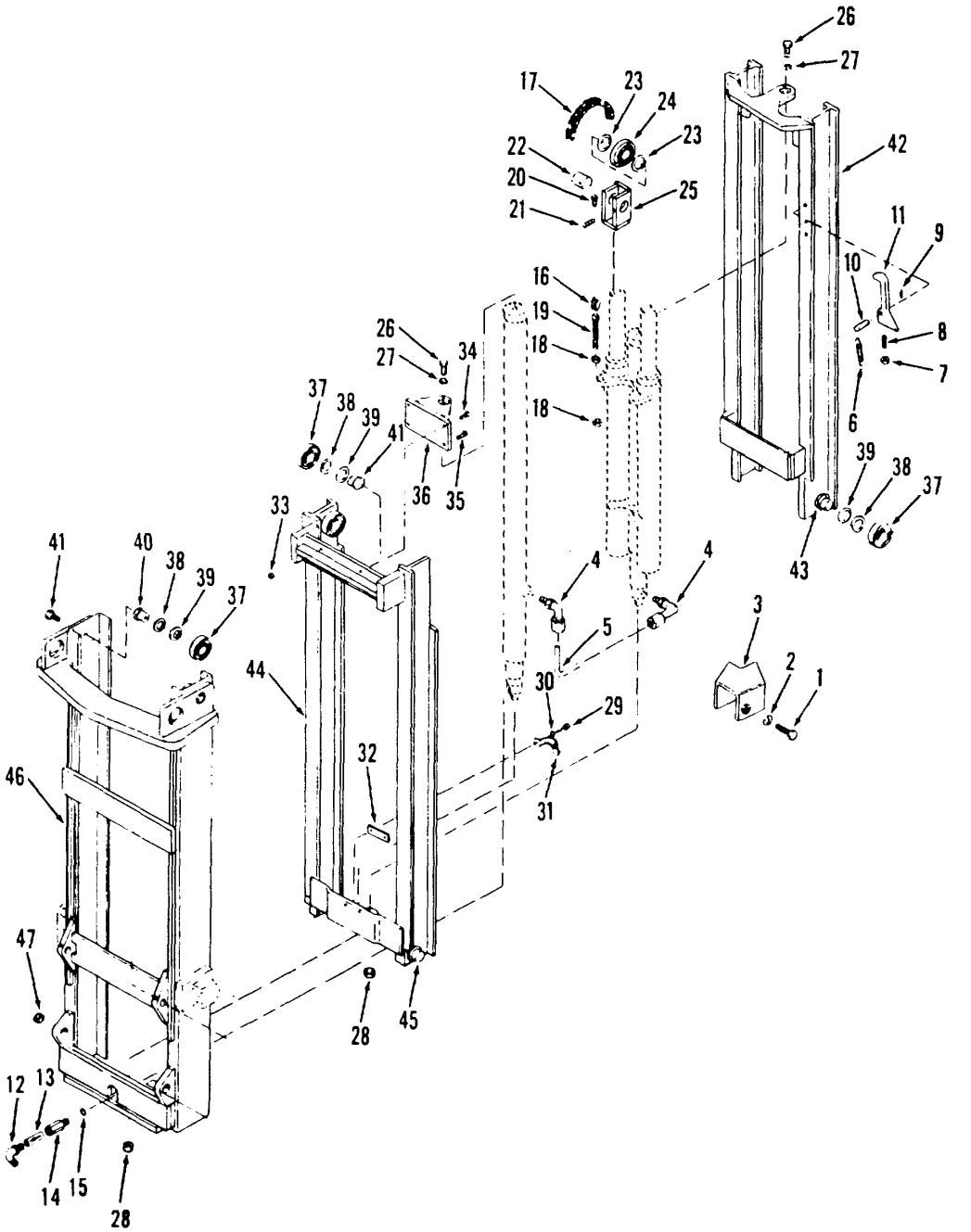

1 Screw	8 Screw	15 Packing	22 Bearing pin	29 Screw	36 Bracket	43 Bearing stud
2 Lock washer	9 Cotter pin	16 Link	23 Washer	30 Lock washer	37 Bearing	44 Intermediate mast
3 Guard	10 Pivot pin	17 Lift chain	24 Bearing	31 Clamp	38 Shim	45 Bearing stud
4 Elbow	11 Interlock	18 Nut	25 Crosshead	32 Spacer	39 Shim	46 Outer mast
5 Tube	12 Elbow	19 Chain anchor	26 Screw	33 Nut	40 Bearing stud	47 Bearing
6 Spring	13 Flow regulator	20 Setscrew	27 Lock washer	34 Screw	41 Screw	
7 Nut	14 Regulator body	21 Pin	28 Lock nut	35 Screw	42 Inner mast	

Figure 3-14. Hydraulic mast, disassembly and reassembly (180 inch lift) (sheet 1 of 2).

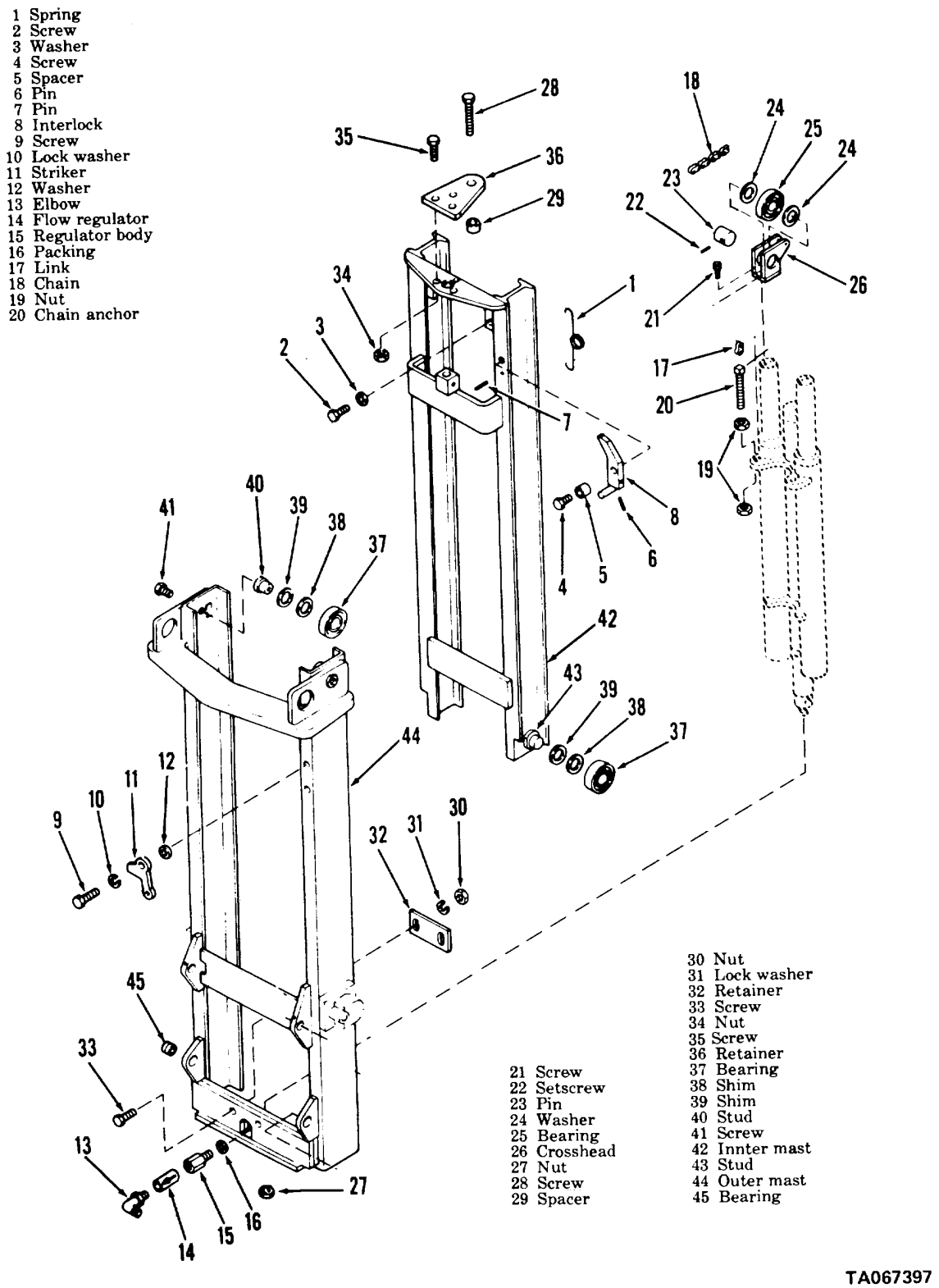

Figure 3-14. Hydraulic mast disassembly and reassembly (100 inch lift) (sheet 2 of 2)

3-32. Mast Assembly, Cleaning, Inspection and Repair

a. Clean all parts in cleaning compound, solvent (Fed. Spec. P-D-680) and dry thoroughly.

b. Inspect masts and channels for cracked and broken welds. Repair welds. Check masts for bent condition. Straighten if possible.

c. Inspect crosshead bearing for wear and damage. Replace if unserviceable.

d. Inspect bearing studs for wear and damage. Replace studs if worn or damaged. Refer to paragraph 3-29d. for stud welding procedure. Refer to figure 3-11 for location of mast studs.

e. Inspect mast bearings for wear and damage. Replace unserviceable bearings.

f. Inspect Interlock spring for cracks and damage. Replace unserviceable springs.

(1) On Model ACC40-24PS100 trucks the interlock spring should be 6.18 inches (156.9 mm) between hooks.

(2) On Model ACC40-24PS180 trucks the interlock spring should be 2.62 inches (66.5 mm) between hook and center of spring.

g. Inspect bearings in outer mast ears for wear and damage. Press out old bearings and install new bearings if bearings are worn or damaged.

3-33. Mast Assembly, Reassembly and Installation.

a. Reassembly. Refer to TM 10-3930-630-12 and reassemble the mast assembly.

b. Installation. Refer to TM 10-3930-630-12 and install the mast assembly.

CHAPTER 4
REPAIR OF ELECTRICAL SYSTEM

Section I. ALTERNATOR

4-1. Description.

a. The fork lift truck electrical system provides power for the lights, horn, gages and for starting the engine. Electricity is stored in the 12 volt battery. Charging for the battery is supplied by a belt driven alternator, mounted on the right side of the engine, below the thermostat housing. The alternator is directly connected to the ignition coil, through a resistor, and to the ammeter. The connection to the battery is through the starter solenoid terminal. Refer to TM 10-3930-630-12 for a wiring diagram of the electrical system.

b. A solid state voltage regulator is mounted inside the alternator. The regulator never requires adjustment and no provision for adjustment is provided.

4-2. Alternator, Removal, and Disassembly

a. Removal. Refer to TM 10-3930-630-12 and remove the alternator.

b. Disassembly. Disassemble the alternator into major subassemblies for testing as follows:

(1) Remove nut (1, fig. 4-1) and waster (2) and, using a suitable puller, remove pulley (3) from the alternator shaft.

(2) Remove nuts (4 and 5) and washers (6, 7, and 8) from terminal stud (9).

(3) Remove three thru bolts (10) from alternator frames.

(4) Scribe a mark on frames (11 and 14). Use a screwdriver to pry the frames apart. Remove screws (12) and disconnect terminals (13) from stator (29). Move end frames (11 and 14) apart to disclose rotor (15). Place tape over the slip ring end on rotor (15) and over the shaft to protect them from dirt and damage.

(5) Place rotor (15) in a vise with protected jaws and tighten only enough to hold rotor in place. Remove drive end frame (14) from rotor (15).

4.3 Alternator, Cleaning, Inspection and Repair

a. Cleaning. Clean all metal parts with a suitable dry cleaning solvent, and dry thoroughly with compressed air. Remove all dirt, dust and foreign matter from the frames and fields with compressed air.

b. Rotor Test.

(1) Check field winding for shorts. Connect an ohmmeter as shown in figure 4-2 to the rotor slip rings.

(2) If ohmmeter shows an infinite reading, slip rings and/or rotor coil is open. Replace rotor.

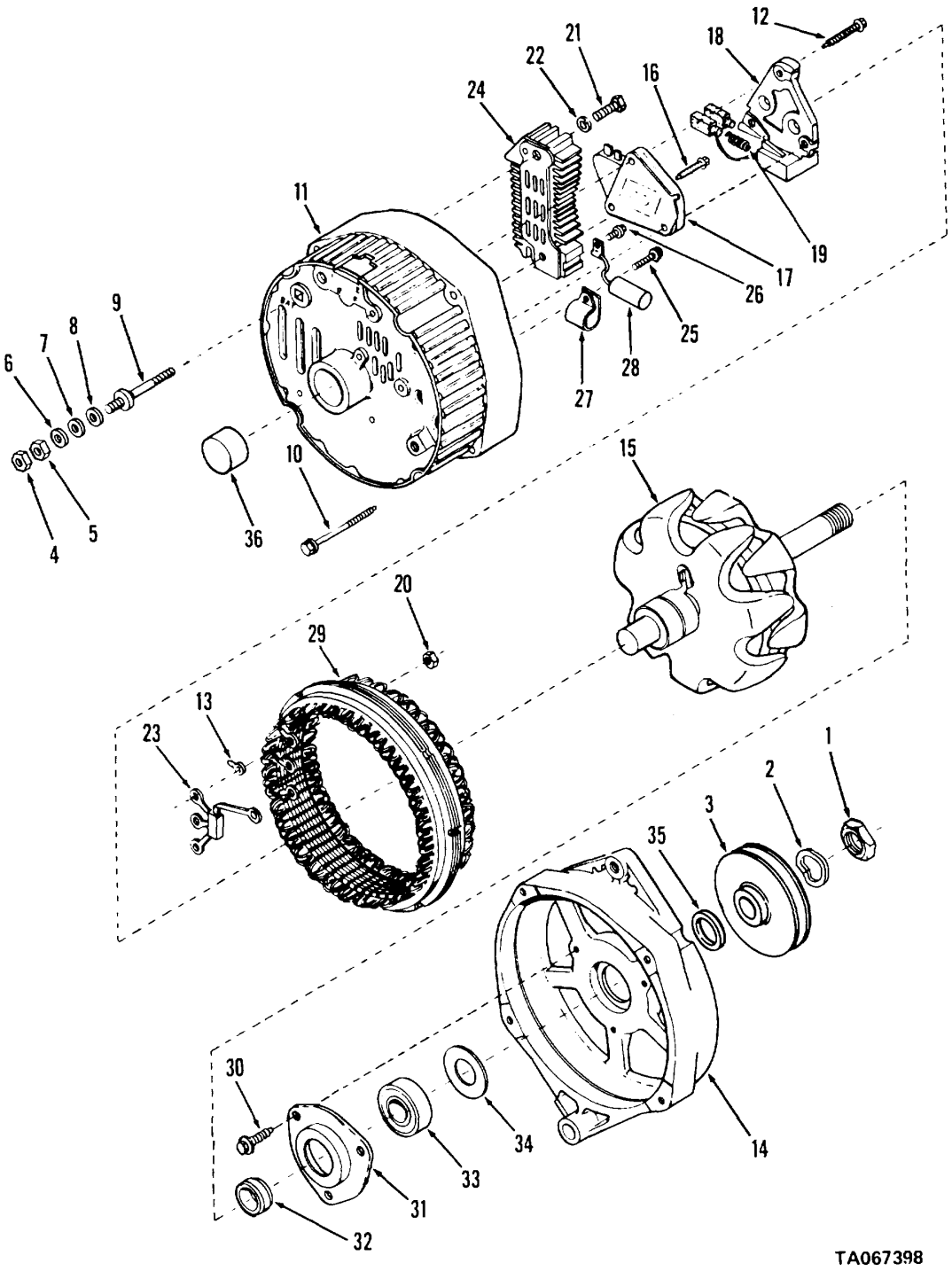

1 Nut	6 Washer	11 Frame	16 Screw	21 Screw	26 Screw	31 Retainer
2 Washer	7 Washer	12 Screw	17 Regulator	22 Washer	27 Bracket	32 Spacer
3 Pulley	8 Washer	13 Terminal	18 Brush holder	23 Diode	28 Capacitor	33 Bearing
4 Nut	9 Terminal stud	14 Frame	19 Brush	24 Rectifier bridge	29 Stator	34 Defector
5 Nut	10 Thru bolt	15 Rotor	20 Nut	25 Screw	30 Screw	35 Spacer
						36 Bearing

Figure 4-1. Alternator, disassembly and reassembly.

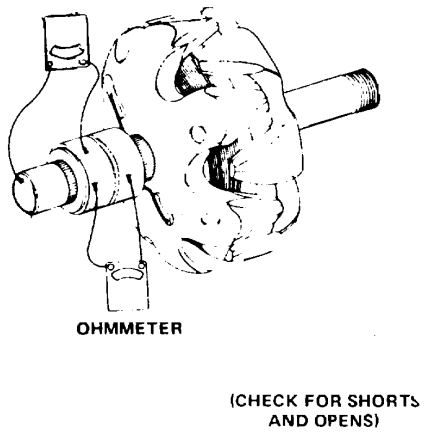

Figure 4-2. Checking rotor.

(3) If coil or slip rings are not open, check ohmmeter reading. Resistance should be approximately 3 ohms. If reading is low, coil is shorted. Replace rotor (15) and regulator (17).

(4) Connect ohmmeter leads to one slip ring and to rotor shaft. If reading is low, rotor coil is grounded. Replace rotor (15).

c. Drive End Frame Test.

(1) Connect ohmmeter leads using smallest range scale, as shown (ohmmeter No. 1) on figure 4-3. Then reverse connections. If both readings are the same, check for grounded brush lead clip to end frame. Check insulating washers (fig. 4-3) and insulating sleeve for damage. Replace insulating washers or sleeve on the brush lead, if necessary.

(2) Connect ohmmeter leads as shown for ohmmeter No. 2 on figure 4-3. Reverse connections. If both readings are the same again check insulating sleeve and replace if necessary. If insulation is correct and both readings are the same, replace regulator (17, fig. 4-1).

d. Diode Test.

(1) Disconnect diode and remove nuts (20, fig. 4-1) and remove diode (23) from end frame (11).

(2) Use the lowest range on the ohmmeter and connect leads as shown in figure 4-4. Observe the reading. Reverse connections and again check reading. If both readings are the same, replace the diode.

(3) Repeat the test between the single connector (fig. 4-4) and each of the other two connectors. If readings are the same, replace the diode.

(4) Connect the ohmmeter between each pair of the three connectors. If any reading is zero, replace the diode.

(5) Install diode (23, fig. 4-1) in frame and secure with nuts (20). Collect diode to brushes.

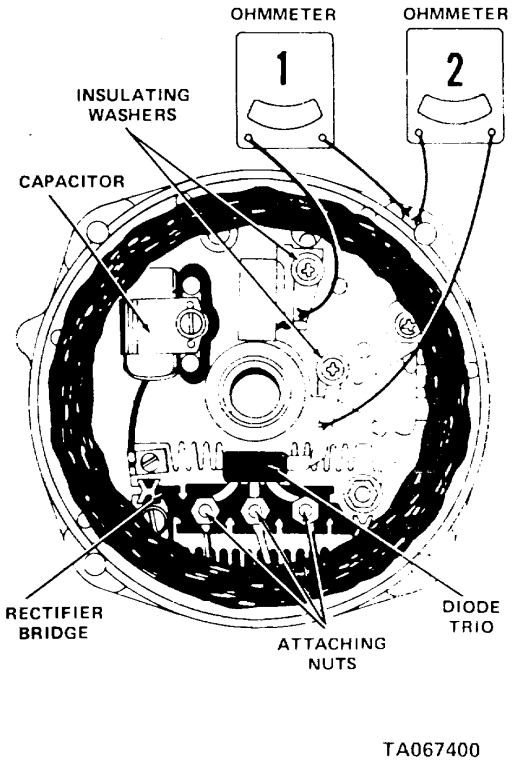

Figure 4-3. Checking drive end frame.

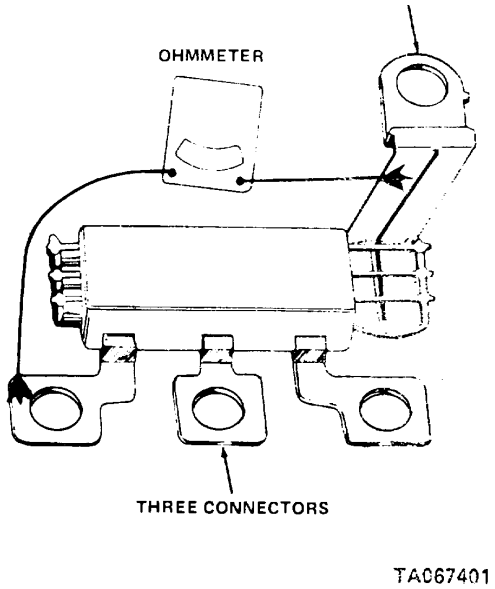

Figure 4-4. Diode test.

e. Rectifier Bridge Test.

(1) Connect an ohmmeter to the grounded heat sink and to one of the three terminals as shown on figure 4-5. Check ohmmeter reading. Reverse ohmmeter connections and again check reading. If both readings are the same, replace the rectifier bridge. A good rectifier bridge will give one high and one low reading. Check each terminal against the heat sink in the same manner.

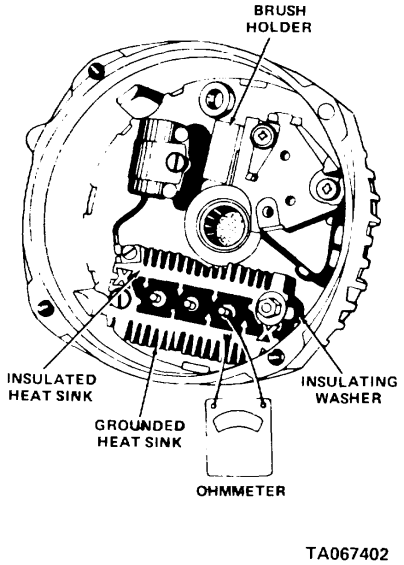

Figure 4-5. Rectifier bridge test.

(2) Refer to *d.* above and remove the diode.

(3) Disconnect capacitor (28, fig. 4-1) from heat sink.

(4) Remove screws (21) and washers (22) and remove rectifier bridge (24) from frame (11).

(5) Install new rectifier bridge (24) and secure with screws (21) and washers (22).

(6) Connect capacitor (28) to heat sink. Install diode *(d.* above).

f. Stator Winding Test.

(1) Connect an ohmmeter between the stator leads as shown in figure 4-6. If the meter reading exceeds normal winding resistance when connected between each pair of leads the windings are open. Replace windings.

(2) Connect ohm meter between stator lead and mounting ring as shown in figure 4-6. If a reading is obtained, winding is grounded. Replace winding.

g. Brush Holder and Regulator Replacement..

(1) Remove diode ((1. above).

(2) Disconnect stator (29, fig. 4-1) from brush.

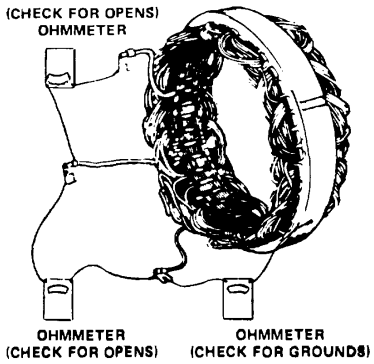

TA067403

Figure 4-6. Stator winding test..

Remove screws (12) and remove brushholder (18) and brush (19).

(3) Remove screws (16) and regulator (17) from frame (11).

(4) Install regulator (17) in frame (11) and secure with screws (16).

(5) Install new brush (19) in brushholder (18) and install brushholder in frame (11) and secure with screws (12).

h. Slip Ring Service.

(1) If slip rings are darkened or dirty, clean rings with fine sandpaper or polishing cloth.

(2) Spin the rotor (15) and hold sandpaper against slip rings until they are clean. Do not attempt to polish by hand. Cleaning without spinning slip rings may result in flat spots on rings.

(3) If slip rings are rough or out of round, place rotor in a lathe and check rings with a dial indicator. Maximum allowable out of round is 0.002 inch (0.05 mm).

(4) Refinish rings removing only enough material to correct out of round conditions. Polish rings as described above and blow out rings to remove dust.

i. Bearing Replacement.

(1) Remove stator (29, fig. 4-1) from drive end frame (14).

(2) Remove screws (30) and bearing retainer (31). Remove spacer (32).

(3) Use a suitable tool and press bearing (33) and oil deflector (34) from frame (14).

(4) Pack bearing one-quarter full of grease (GAA). Install oil deflector (34) in frame (14). Use a

suitable pressing tool and press bearing (33) into frame bore until flush with surface.

(5) Inspect retainer (31). If felt seal in retainer is hardened or worn, replace retainer. Fill cavity between retainer and bearing with grease (GAA) and install retainer. Secure retainer with three screws (30).

(6) Inspect bearing (36) in slip ring end frame for wear and damage. If bearing is worn or damaged, replace bearing. Press bearing from frame (11) with a suitable pressing tool.

(7) Install new bearing (36) in frame (11) and press bearing in from outside of frame until bearing is flush with outside of frame.

4-4. Alternator, Reassembly and Installation

a. Reassembly. After all tests and repairs are completed, reassemble the major subassemblies of the alternator as follows:

(1) Install assembled drive end frame (14, fig. 4-1), with stator (29) in place, on rotor (1.5).

(2) Remove tape from bearing and slip rings. Insert a pin through hole in frame to hold brushes away from the slip rings.

(3) Check match marks made during disassembly, and carefully install rotor shaft into slip ring end frame to avoid damage to bearing and seal. Secure drive end frame (14) and slip ring end frame (11) with four thru bolts (10). Tighten bolts evenly.

(4) Install nuts (4 and 5) and washers (6, 7, and 8) on terminal stud (9).

(5) Install fan and pulley (3) on rotor shaft and secure with nut (1) and washer (2). Hold rotor in vise and tighten nut to a torque of 40 to 60 foot pounds (54.2 to 81.3 N m).

b. installation. Refer to TM 10-3930-630-12 and install the alternator.

Section II. STARTER

4-5. Description

The engine starter is mounted on the left side of the flywheel housing. A solenoid relay is mounted on the starter and actuates the overrunning clutch. The clutch pinion engages the flywheel and rotates the engine to start it.

4-6. Starter, Removal and Disassembly

a. Removal. Refer to TM 10-3920-630-12 and remove the starter.

b. Test. Check the starter as follows:

(1) Connect the starter in series with an ammeter capable of reading several hundred amperes, a variable resistance and a voltmeter as shown in figure 4-7.

(2) Operate starter and adjust resistance to obtain a reading of 9 volts on voltmeter.

(3) Check rpm of starter. The starter must operate at 5,500 to 10,500 rpm.

(4) With starter operating at specified rpm, check ammeter. Reading must be between 50 to 80 amps.

(5) If starter operates at lower speed and with a high current draw, repair starter.

(6) If starter does not operate within limits specified in (3) and (4) above, repair starter.

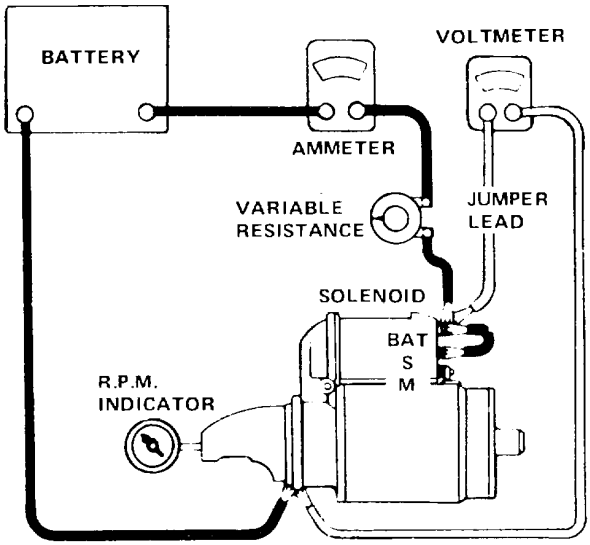

TA067404

Figure 4-7. Starter no-load test.

c. Resistance Test.

(1) Connect starter into a circuit with an ammeter, voltmeter, variable resistance and a battery as shown in figure 4-8.

(2) Securely lock the pinion, using the brake arm, to prevent the armature from turning.

(3) Energize the starter with 4 to 5 volts. Adjust voltage with variable resistance.

(4) Current reading must be from 270 to 310 amps. If current is not within limits specified, repair starter.

d. Disassembly. Disassemble the starter assembly in numerical sequence as illustrated in figure

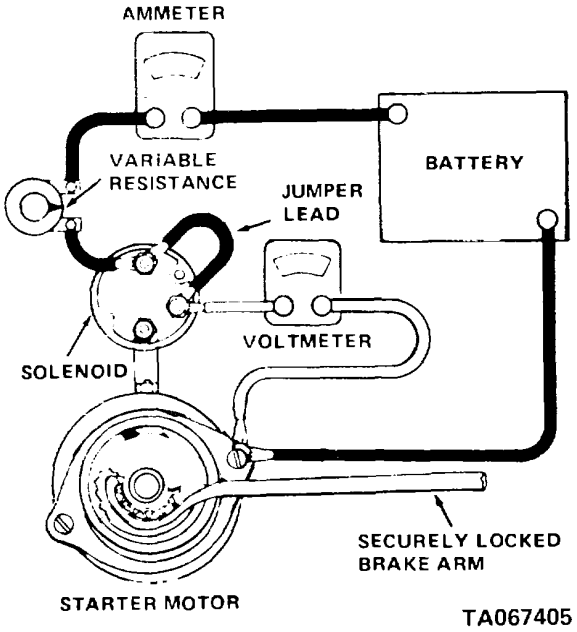

Figure 4-8. Starter resistance test.

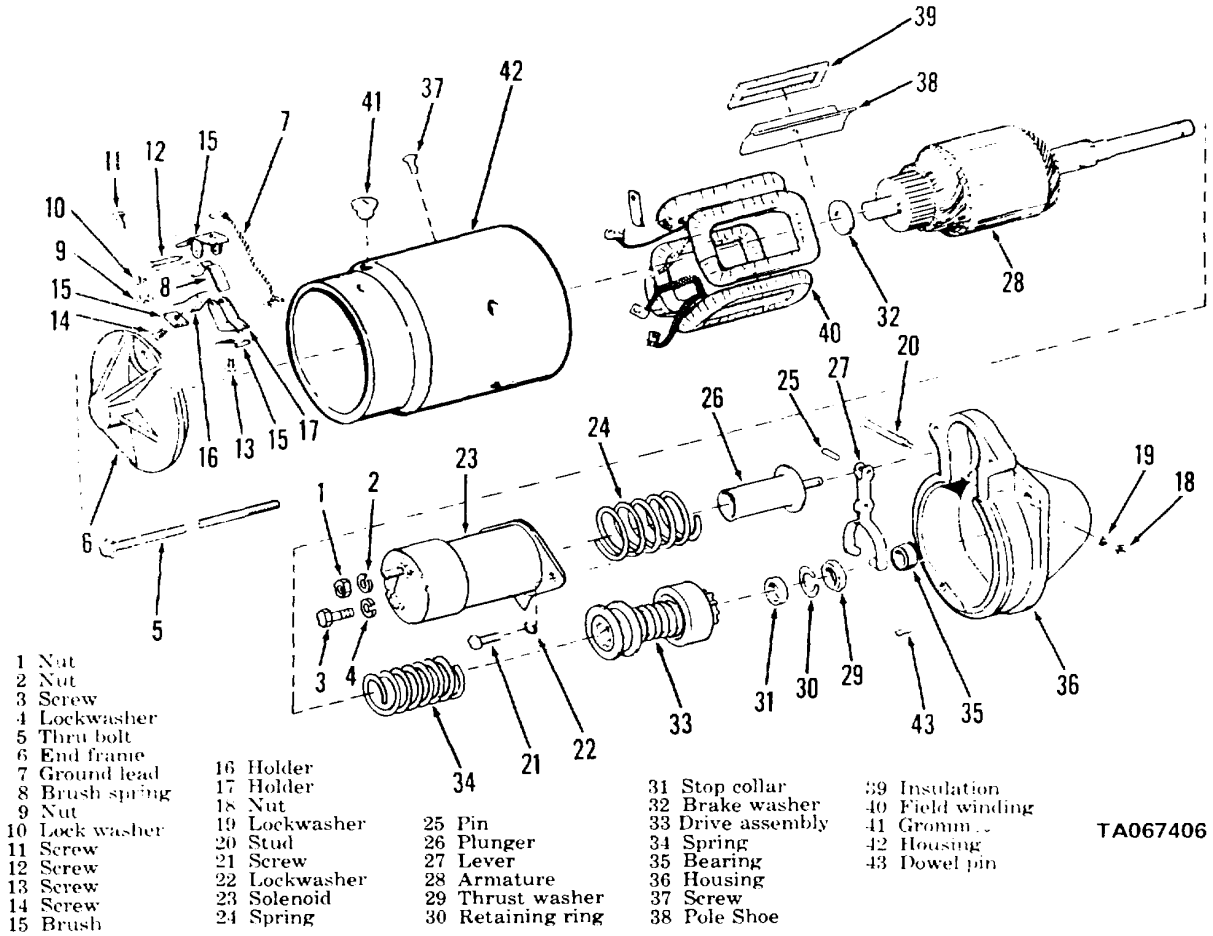

Figure 4-9. Starter, disassembly and reassembly.

4-7. Starter, Cleaning, Inspection and Repair

a. Clean all metal parts, except rubber or insulated parts, in cleaning solvent (Fed. Spec. P-D-680). Dry parts thoroughly.

b. Check armature for shorts on a growler.

(1) Place armature on growler. Check with a steel strip or hacksaw blade held on armature core.

(2) Rotate armature. If blade vibrates armature is shorted in area of core below blade.

(3) Clean commutator slots.

(4) If short cannot be eliminated, replace armature.

c. Check armature for opens.

(1) Inspect points where core conductors are connected to the commutator for loose connections. Poor connections cause arcing and burning of commutator.

(2) If commutator bars are not badly burned, resolder leads to bars.

d. Check commutator for out-of-round.

(1) If commutator is worn out-of-round, turn commutator on a lathe.

(2) After turning commutator, undercut insulation between bars 0.031 inch (0.78mm).

e. Check field winding for grounds and opens with a test lamp.

(1) Connect test lamp probes to ends of field windings. If lamp does not light, field windings are open and must be replaced.

(2) To check for opens, after installation of field windings, connect one probe of test lamp to field winding connection and one to starter housing. If lamp lights, field windings are grounded and must be repaired or replaced.

f. Check all springs for damaged or weakened condition. Replace unserviceable springs.

g. Inspect drive assembly for damage and wear to spring and gear. Replace unserviceable drive assembly.

h. Inspect brushes. If brushes are worn to less than one-half of their original length, replace brushes.

i. Check brush springs. Spring tension on brushes must be 35 ounces (1.04 kg).

4-8. Starter, Reassembly and Installation

a. Reassemnbly.

(1) Install spring (34, fig. 4-9) and drive assembly (33) on armature shaft. Spiral splines in drive assembly must engage spiral splines on armature shaft.

(2) Install stop collar (31) and retaining ring (30) on shaft. Press thrust washer (29) on shaft over retaining ring.

(3) Install brake washer (32) on armature shaft.

(4) Install field winding (40) in housing (42). Install insulation (39) and pole shoes (38) in housing between field winding coils. Pole shoes with long lip on side must be installed with lip in direction of armature rotation. Secure pole shoes with pole shoe screws (37).

(5) Install armature (28) in housing (42) with armature core between pole shoes.

(6) If bearing (35) was removed from housing (36), press new bearing into bore in housing. End of bearing must be flush with or slightly below end of bore.

(7) Install lever (27) in housing (36) and install stud (20) to secure lever. Secure stud with nut (18) and lock washer (19).

(8) Check marks on lever housing (36) and starter housing (42) and install housing (36). Engage prongs on lever (27) with slot in drive assembly.

(9) Install plunger (26) in housing and secure plunger to lever with pin (25).

(10) Slide solenoid (23) and spring (24) over plunger and up to housing. Secure solenoid with screws (21) and lock washers (22).

(11) Install brushes (15) in brushholders (16 and 17). Secure brushes with screws (13 and 14).

(12) Install assembled brushholders on end frame (6) and secure with screws (11 and 12), lock washers (10) and nuts (9). Install springs (8) in brushholders and against brushes. Connect ground lead (7) to brushes and frame.

(13) Hold brushes (15) apart and install assembled end frame (6) on housing and armature. Release brushes so that brushes contact armature commutator.

(14) Connect field winding leads to solenoid (23).

(15) Secure housings together with through bolts (5).

b. Pin ion Clearance Check.

(1) Disconnect field winding connector from rear of solenoid and insulate connector.

(2) Connect a battery from the solenoid switch terminal to the solenoid frame as shown in figure 4-10.

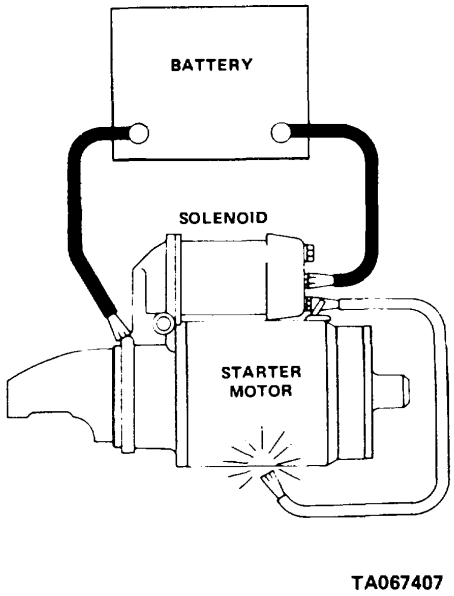

Figure 4-10. Test circuit for pinion clearance check.

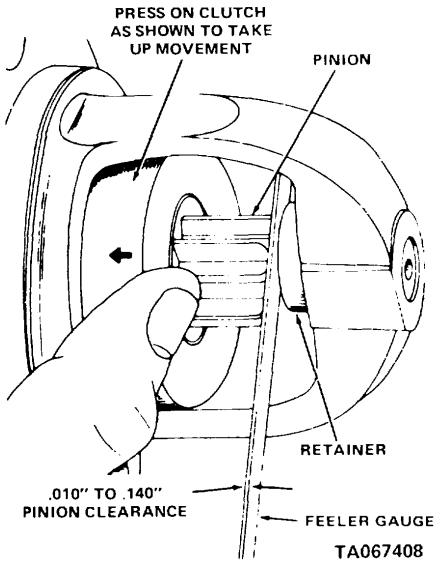

Figure 4-11. Measuring pinion clearance.

(3) Momentarily touch a jumper lead (fig. 4-10) from solenoid motor terminal to starter frame.

(4) This will shift drive assembly pinion into cranking position. Push pinion back toward commutator to eliminate slack in drive assembly.

(5) Measure the distance between pinion and pinion stop with a feeler gage (fig. 4-11) to obtain pinion clearance.

(6) Clearance must be 0.010 to 0.140 inch (0.25 to 3.5 mm). If clearance is not within limits, disassemble starter and replace drive assembly and/or solenoid.

c. Installation. Refer to TM 10-3930-630-12 and install starter on engine.

CHAPTER 5
REPAIR OF FUEL SYSTEM

Section I. FUEL TANK

5-1. Description

a. The fuel tank supplies the carburetor with fuel through the fuel lines, fuel pump, strainer and filter. The fuel is vaporized and mixed with fresh air for controlled combustion.

b. The fuel tank is of steel construction with welded seams. It includes a fuel lever transmitter, a filler cap with filter screen and the fuel outlet line and fittings.

5-2. Fuel Tank, Removal and Disassembly

a. Removal. Refer to TM 10-3930-630-12 for removal of the fuel tank.

b. Disassembly.

(1) Remove necessary fittings from tank and drain any fuel that remained in tank after removal.

(2) Disassemble the fuel tank in numerical sequence as illustrated in figure 5-1.

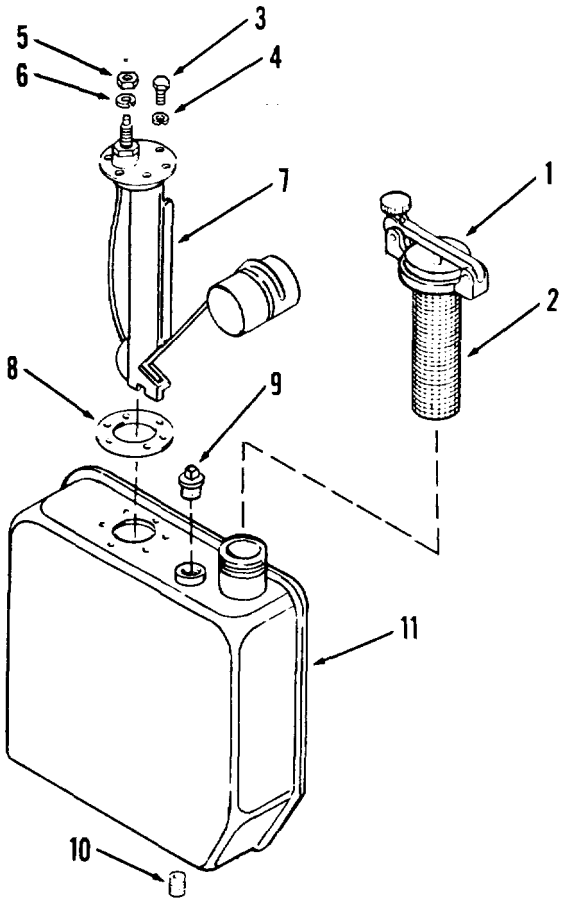

TA067409

1	Cap	6	Lock washer
2	Screen	7	Transmitter
3	Screw	8	Gasket
4	Washer	9	Plug
5	Nut	10	Nipple
11	Fuel tank		

Figure 5-1. Fuel tank, disassembly and reassembly.

5-3. Fuel Tank, Cleaning, Inspection and Repair

a. Clean filler cap and screen assembly with cleaning solvent (Fed. Spec. P-D-680) and dry thoroughly with compressed air.

b. Check fuel tank for cracks, breaks or other damage.

CAUTION

Be certain tank has been thoroughly flushed before welding procedure is begun.

c. If damage to the fuel tank is not severe, repair by welding (para 2-10).

5-4. Fuel Tank, Reassembly and Installation

a. Reassembly. Reassemble the fuel tank in the reverse of numerical sequence as illustrated in figure 5-1.

b. Installation. Refer to TM 10-3930-630-12 and install fuel tank.

Section II. CARBURETOR

5-5. Description

a. The carburetor is of the single barrel updraft design, with a single venturi, twin floats and a semi-concentric fuel bowl to permit operation at extreme angles without flooding or starving the engine. The fuel supply system is made up of the threaded fuel inlet and the float chamber. The idle system consists of two idle discharge holes, idle air passage, idle adjusting needle, idle jet and fuel pickup passage. The main metering system consists of the venturi, main jet, main discharge, and well vent.

b. The carburetor is mounted below the intake manifold on the left side of the engine. The accelerator pedal and the choke are connected to the carburetor by cables.

5-6. Carburetor, Removal and Disassembly

a. Adjustment and Removal. Refer to TM 10-3930-630-12 for adjustments and removal of the carburetor.

b. Disassembly. Disassemble the carburetor in numerical sequence as illustrated in figure 5-2.

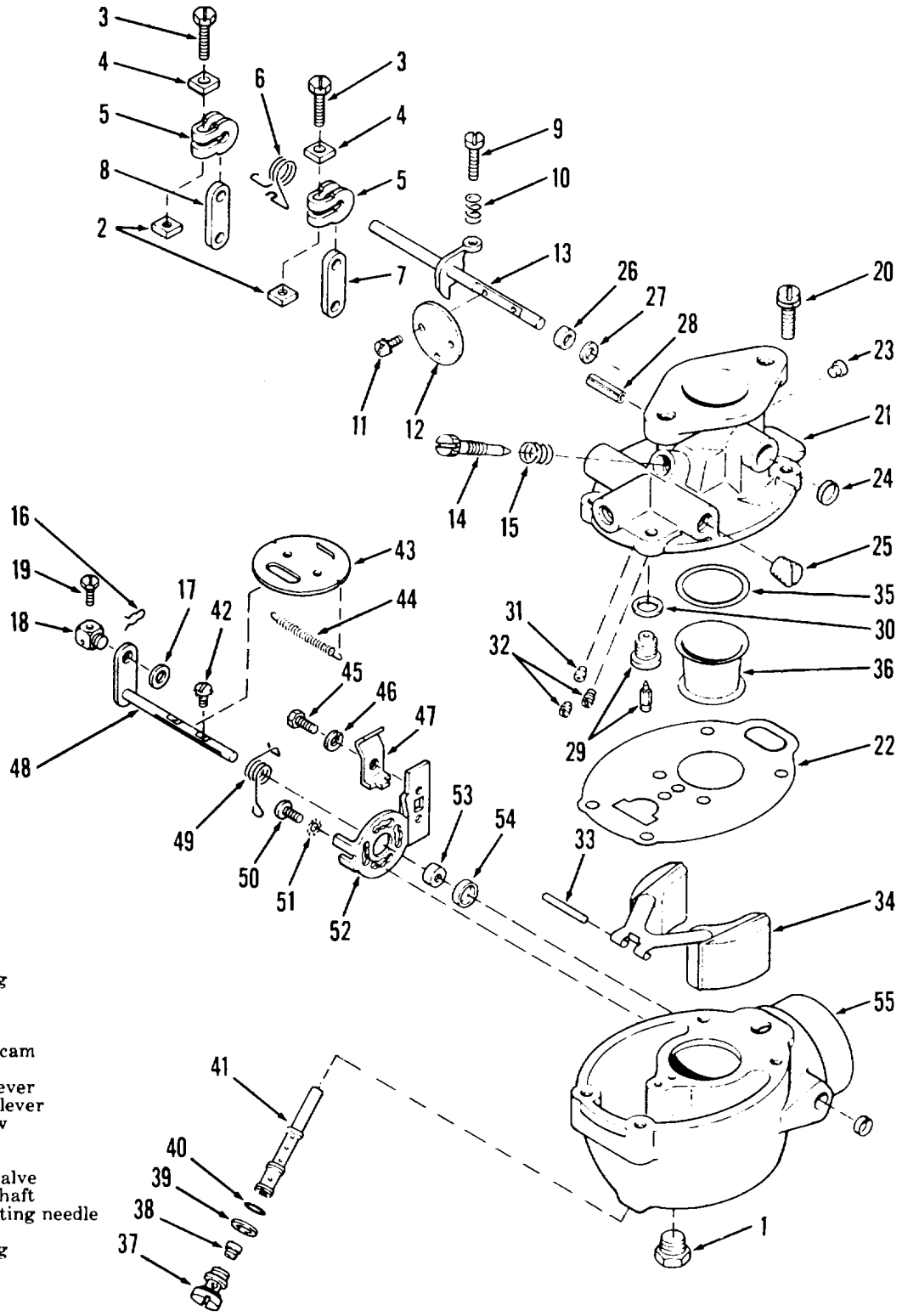

1 Drain plug
2 Nut
3 Screw
4 Nut
5 Governor cam
6 Spring
7 Throttle lever
8 Governor lever
9 Stop screw
10 Spring
11 Screw
12 Throttle valve
13 Throttle shaft
14 Idle adjusting needle
15 Spring
16 Clip spring
17 Washer
18 Block
19 Screw
20 Screw
21 Throttle body
22 Gasket
23 Plug
24 Plug
25 Plug
26 Retainer
27 Packing
28 Pin
29 Float valve and seat
30 Gasket
31 Idle jet
32 Economizer jet
33 Axle shaft
34 Float
35 Packing
36 Venturri
37 Plug
38 Power jet
39 Gasket
40 Packing
41 Nozzle
42 Screw
43 Choke valve
44 Spring
45 Screw
46 Lock washer
47 Bracket
48 Choke shaft
49 Spring
50 Screw
51 Washer
52 Choke bracket
53 Retainer
54 Packing
55 Fuel bowl

Figure 5-2. Carburetor, disassembly and reassembly.

5-7. Carburetor, Cleaning, Inspection and Repair

a. Clean all metal parts of the carburetor in cleaning solvent (Fed. Spec. P-D-680) and dry parts thoroughly.

b. If float valve is grooved or damaged, replace the float valve and seat.

c. Check for looseness between throttle shaft and lever assembly and throttle body. If looseness is noted, replace the throttle shaft and lever assembly.

d. All packings and gaskets should be replaced at assembly.

e. Replace the idle adjusting needle if grooved or damaged.

NOTE

Whenever the carburetor is overhauled, it is recommended that kit parts be installed in place of old parts even if damage is not noted.

5-8. Carburetor, Reassembly and Installation

a. Reassembly.

(1) Install new packing (27) and retainer (26) on the throttle shaft and lever assembly. Insert assembled shaft in carburetor and tap lightly until retainer is flush with casting face.

(2) Install throttle valve (12) on shaft with identification mark on valve facing flange face of carburetor. Tap valve lightly to center in throttle bore and tighten screws (11) securely.

(3) Install economizer jet (32), idle jet (31) and idle adjusting needle (14) with spring (15). Turn adjusting needle (14) all the way in to seat then back off approximately one turn for preliminary setting.

(4) Position a new gasket (30) on float valve seat and install float valve and seat (29) into throttle body (21).

(5) Install new gasket (22) on throttle body. Install new packing (35) and venturi (36) on throttle body.

(6) Position float (34) on throttle body and install axle shaft (33) through float lever.

(7) Measure distance from float to gasket on throttle as shown on figure 5-3. Distance must be 0.250 inch (6.35mm) from gasket face to nearest edge of float. If distance is not correct, use a long nosed pliers to bend lever to attain this measurement.

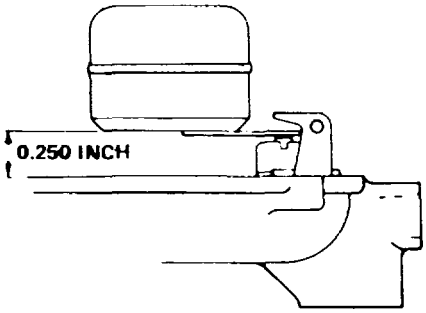

TA067411

Figure 5-3. Carburetor float setting.

NOTE

Do not bend, twist or apply pressure to float bodies. The float bodies when viewed from the free end of the bodies, must be centered and at right angles to the machined gasket surface and must move freely on the float axle shaft.

(8) Install choke shaft retainer (53, fig. 5-2) and packing (54) in the recess of the choke bracket (52) and tap bracket in place on fuel bowl throat to seal packing. Secure bracket with screws (50) and lock washers (51). Install bracket (47) and secure with screws (45) and lock washers (46).

(9) Install choke shaft (48) and return spring (49). Install choke valve (43) and spring (44) on lever and center valve in casting before tightening screws (42).

(10) Install main nozzle (41) through bottom of casting. Place new packing (40) and a gasket (39) in recess and assemble power jet (38) and nozzle plug (37) into fuel bowl.

(11) Invert throttle body (21) and lower fuel bowl (55) over floats. Be sure venturi (36) guides float bodies into position.

(12) Install bowl screws (20) and tighten screws gradually until all screws are secured. Install drain plug (1) in bottom of bowl.

(13) Install levers (7 and 8) on shaft. Install spring (6) and governor cams (5) over levers (7 and 8). Install screws (3) and nuts (4 and 2) on governor cams. Install stop screw (9) and spring (10) on shaft (13).

(14) Install block (18) and screw (19) on choke lever and secure with washer (17) and clip spring (16).

(15) Install pin (28) and plugs (23, 24, 25 and 55).

b. Installation and Adjustment. Refer to TM 10-3930-630-12 for installation and adjustments of carburetor.

CHAPTER 6
REPAIR OF COOLING SYSTEM

Section I. DESCRIPTION

6-1. General

The cooling system for the lift truck engine consists of a water pump, a fan drive adapter, cooling fan, drive belt radiator, thermostat and connecting hoses.

6-2. Cooling System Operation

A gear in the fan drive adapter, driven by the camshaft gear, drives a1 pulley. The belts are driven by the pulley and, in turn, drive the fan and alternator pulleys. A tank, mounted below, which is an integral part of the radiator, cools the transmission oil. Capacity of the system is 9 quarts (9.45 liters) of coolant.

Section II. RADIATOR

6-3. Description

The radiator stores coolant and provides cooling surfaces for the fan driven air to pass over and lower the temperature of the coolant. It is mounted at the rear of the truck in a cutout in the counterweight. A grille is provided to protect the radiator.

6-4. Radiator, Removal and Disassembly

a. Removal. Refer to TM 10-3930-630-12 for removal of the radiator.

b.. Cooling System Fish.

(1) *Radiator*

NOTE

It is not necessary to remove the radiator to perform reverse flushing. Disconnect the upper and lower radiator hoses and proceed as follows.

(a) Check to be certain radiator cap is tight.

(b) Clamp) flushing gun (fig. 6-1) in the lower hose with a hose clamp.

(c) Turn on the water and fill the radiator.

(d) Apply 4iir pressure at 6 psi (0.42 kg/m2) maximum gradually, to avoid radiator damage.

(e) Shut off air, fill radiator with water again and apply air pressure. Repeat until the flushing stream runs out clear.

(f) Clean and inspect radiator cap. Replace if damage is noted. Radiator cap must maintain 7 psi in system.

(2) Water Jacket.

(a) Refer to TM 10-3930-630-12 and remove the thermostat and disconnect upper hose and lower hoses from radiator.

(b) Clamp the flushing gun (fig. 6-1) in the upper hose.

(c) Partially close the lower hose to fill the water jacket with water.

(d) Apply air pressure at 6 psi (0.42 kg/m2) maximum and blow out water.

(e) Shut off air, fill jacket with water again and apply air pressure. Repeat until flushing stream runs out clear.

(f) Disconnect flushing gun. Connect hose to radiator and install thermostat (TM 10-3930-630-12).

c. Disassembly. Disassemble the radiator assembly in numerical sequence as illustrated in figure 6-2.

6-5. Radiator, Cleaning, Inspection and Repair

a. Flush transmission oil cooler tank (bottom part of radiator) with cleaning solvent and blow out with compresses air.

b. Brace all fractures and breaks for proper sealing. If damage is severe, replace the radiator assembly.

c. To clean cooling fins direct a blast of' dry air against the real of the radiator core to dislodge dust which may accumulate due to dusty operating conditions.

d. Clean the cooling system to remove lime, scale, and other foreign deposits from the cooling system.

e. Refer to TM 10-3930-630-12 and inspect all hoses and fittings for signs of deterioration, and replace if necessary.

6-6. Radiator, Reassembly and Installation

a. Reassembly. Reassemble the radiator in the reverse of numerical sequence as illustrated in figure 6-2.

b.. Installation. Refer to TM 10-3930-630-12 and install the radiator.

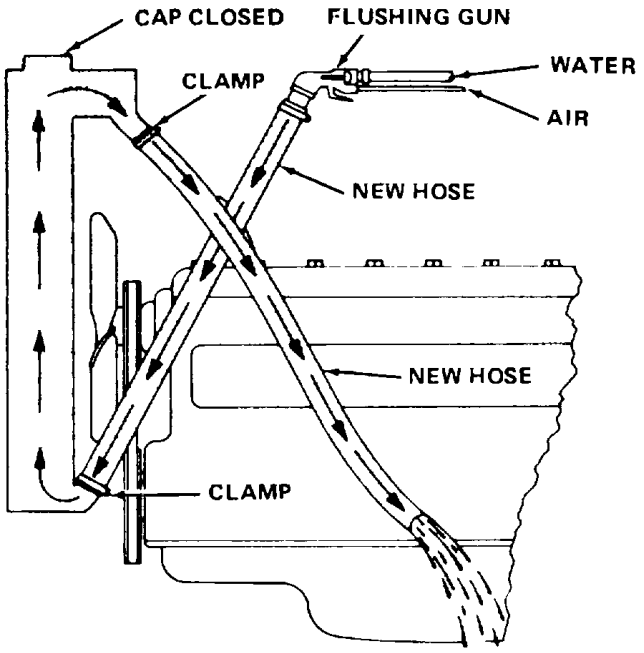

A. REVERSE FLUSHING RADIATOR

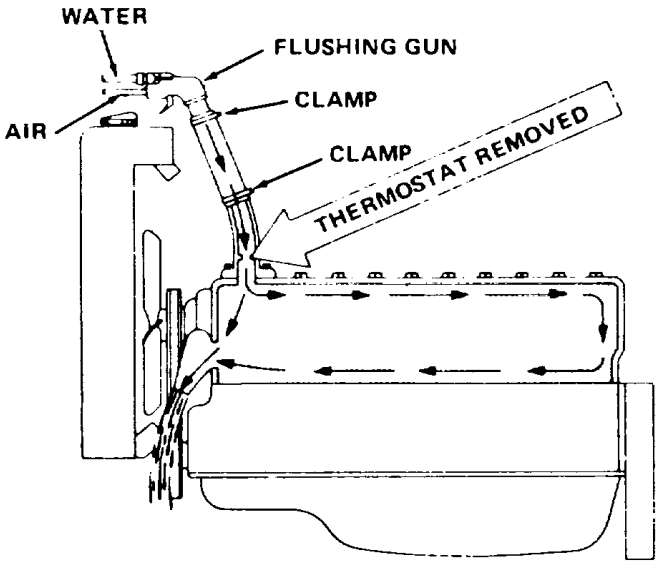

B. REVERSE FLUSHING WATER JACKET

TA067412

Figure 6-1. Reverse flushing cooling system.

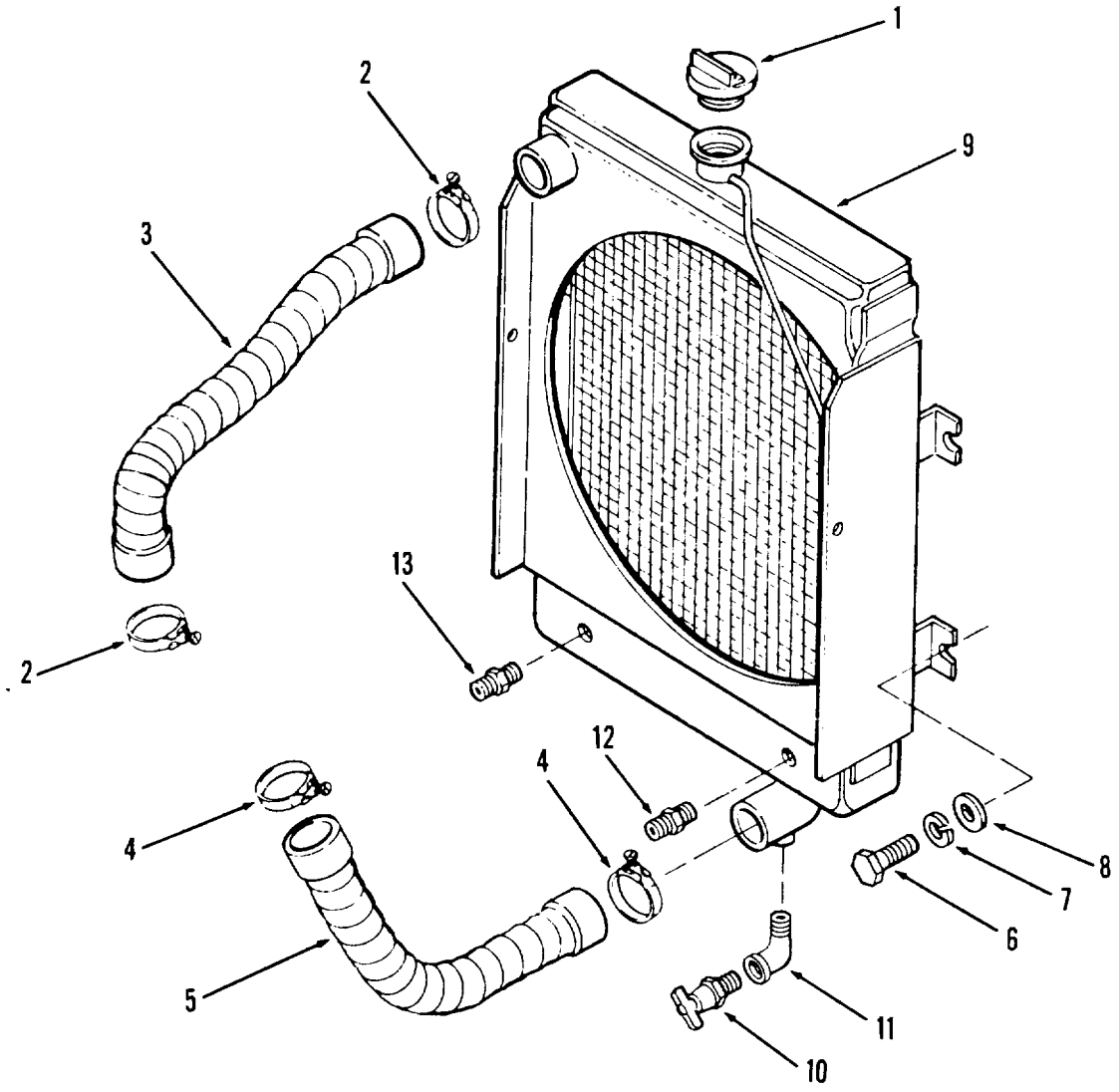

TA067413

1	Cap	5	Lower hose	9	Radiator
2	Hose clamp	6	Screw	10	Drain cock
3	Upper hose	7	Lock washer	11	Elbow
4	Hose clamp	8	Washer	12	Adapter
				13	Adapter

Figure 6-2. Radiator, disassembly and reassembly.

CHAPTER 7
REPAIR OF WHEELS AND TIRES

Section I. DRIVE WHEELS

7-1. Description

a. The wheels used on all cushion tire lift trucks are machined castings. A chamfer is provided on the outside of the wheel and on the end of the inside diameter of the tire metal insert to facilitate alignment.

b. To prevent damage to the wheel the tire must be installed with the chamfered side of the wheel up during installation.

7-2. Drive Wheel, Removal and Disassembly

Remove and disassemble the drive wheel in numerical sequence as illustrated in figure 7-1.

7-3. Drive Wheel, Cleaning, Inspection and Repair

a. Replace wheel if damage is noted.

b. Clean bearing cups and cones and replace if

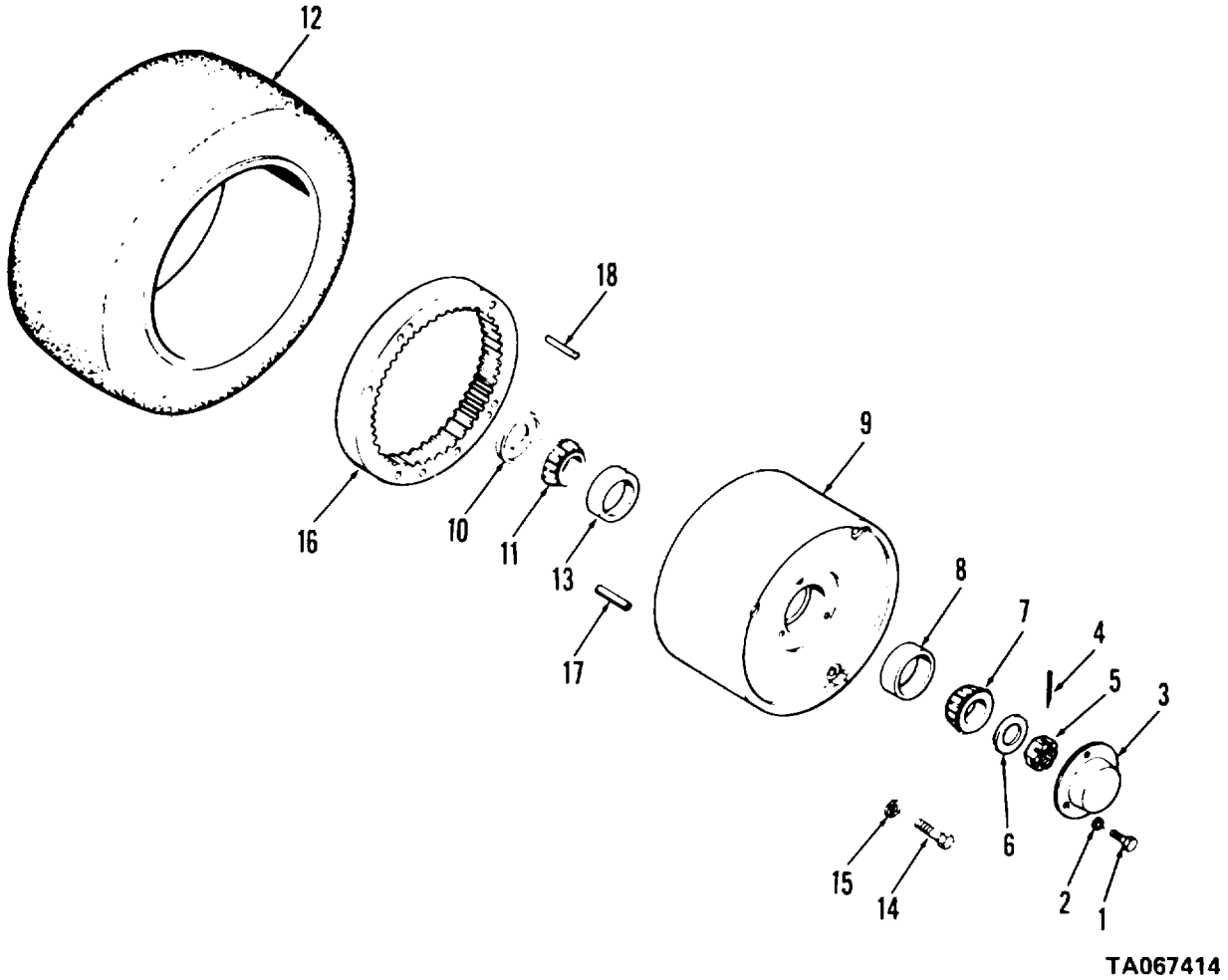

1 Screw	4 Cotter pin	7 Bearing cone	10 Grease shield	13 Bearing cup	16 Drive or bull gear
2 Lock washer	5 Jam nut	8 Bearing cup	11 Bearing cone	14 Screw	17 Straight pin
3 Hub cap	6 Flat washer	9 Drive wheel	12 Drive tire	15 Lock washer	18 Spring pin

Figure 7-1. Drive wheel, disassembly and reassembly.

damage is observed.

c. Check drive or bull gear for cracks, chips or other damage.

d. Check teeth of bull gear for wear, broken teeth and damage.

(1) Check runout of bull gear teeth diameter as shown in figure 7-2.

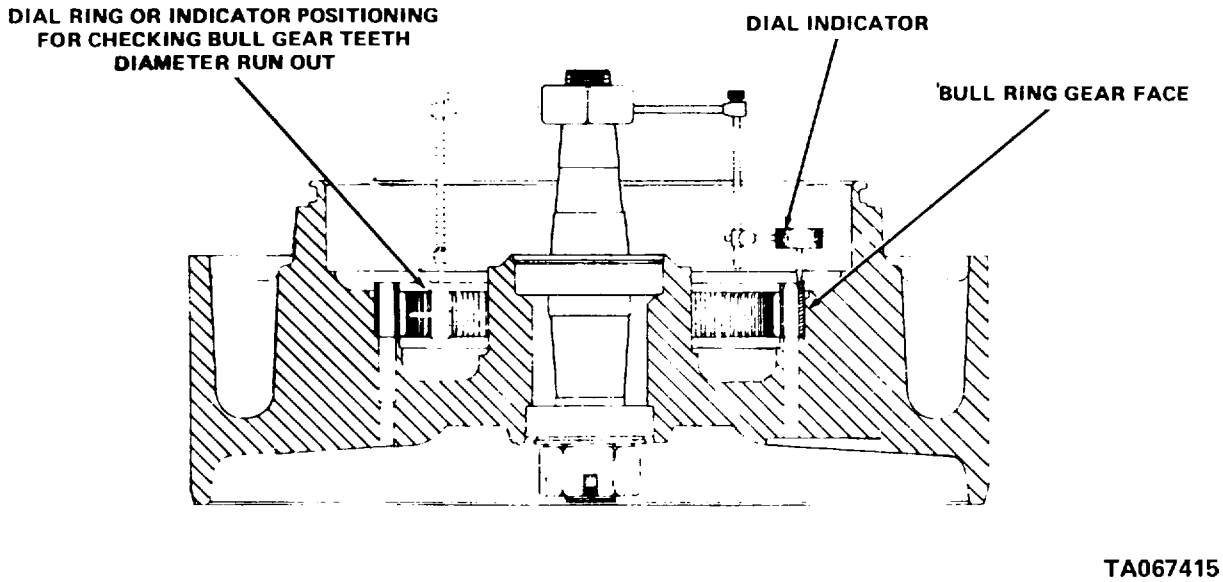

Figure 7-2. Checking bull gear face and teeth runout.

(2) Runout of bull gear face must not exceed 0.010 inch (0.254 mm).

(3) Runout of inside diameter of bull gear face must not exceed 0.005 inch (0.127 mm).

e. Check inside diameter of brake shoes surface in drive wheel.

(1) Check inside diameter at points 45 degrees apart. Resurface drum if measurements differ more than 0.010 inch (0.254 mm).

(2) Inspect lining wear pattern (fig. 7-3). Resurface or reface bell-mouthed or barrel shaped drums. Scored drums must be resurfaced if scoring is over 0.010 inch (0.254 mm) deep. Resurface drums that are heat checked.

(3) If drums do require resurfacing, resurface both drums. Finish grind or hone drums to remove tool marks, to prevent excessive lining wear and to avoid runout when brakes are applied.

(4) Do not remove more than 0.050 inch (1.27 mm) from a drum. Replace drum requiring deeper resurfacing. Maximum inside diameter after resurfacing will not exceed 11.053 inches (280.74 mm).

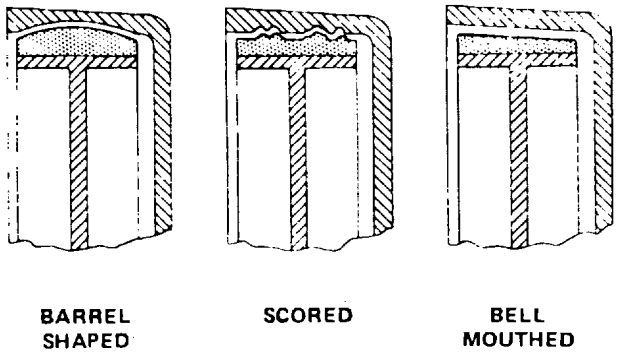

TA067416

Figure 7-3. Improper lining wear pattern.

7-4. Drive Wheel, Reassembly and Installation

a. Reassemble and install the drive wheel in reverse numerical sequence as illustrated in figure 7-1.

b. Install the bull gear (16) on the drive wheel (9) with the chamfer down. Check to insure spring pins (18) do not exceed beyond the face of the bull gear (fig. 7-4).

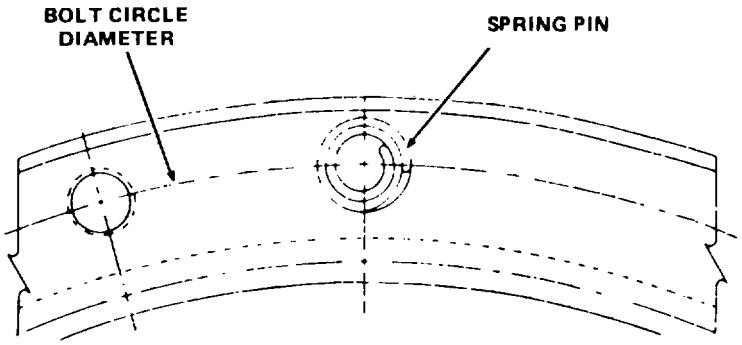

Figure 7-4. Spring pin installed in bull gear.

Section II. TIRES

7-5. Description

The cushion tires used on the lift truck are a press fit on the wheels. They have a chamfer on the end of the inside diameter of the tire's metal insert. This chamfer facilitates alignment of wheel and tire during pressing operation.

7-6. Tire Removal

a. Refer to paragraph 7-2 and remove the wheel and tire assembly from the lift truck.

b. Tire is removed during the replacement procedure as described in paragraph 7-7.

7-7. Tire, Cleaning, Inspection and Repair

a. Check inside diameter of metal inserts of new tires. Remove any scale or rust with sandpaper. Clean inside of metal insert and lubricate with bearing grease (GAA).

b. Place a circular ram on the press table, figure 7-5. Length of ram must be longer than width of the old tire to allow complete removal of old tire.

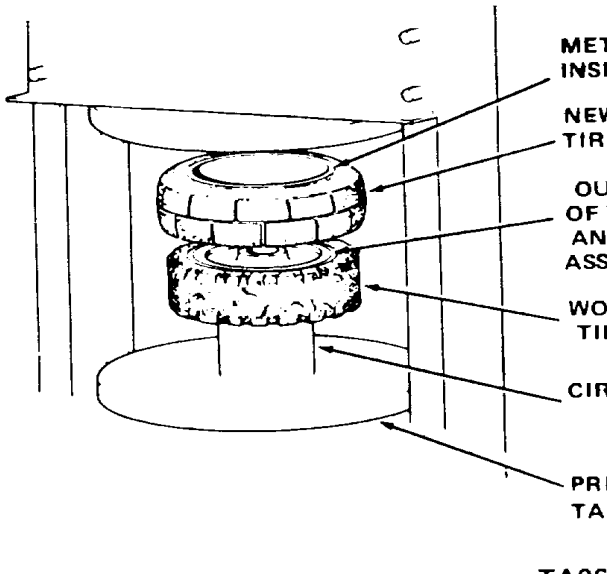

Figure 7-5. Cushion tire, removal and installation.

c. The outside diameter of the ram must be small enough to fit loosely in the insert of the tire, but large enough to rest squarely on the flat surface at the outer edge of the wheel.

d. If outside edge of the wheel is not flush with the edge of the metal insert in the old tire, measure how far wheel is recessed inside the tire (fig. 7-6). New tire must be replaced at the same position that worn tire is installed on wheel.

e. Use a spacer, slightly smaller in diameter than inside diameter of the tire insert and the same thickness as the depth of the recess, to obtain proper amount of recess.

f. Position wheel assembly with worn tire on top of circular ram so outside of wheel is positioned upward. The outside edge of the wheel has a chamfer to guide the new tire onto the wheel. The chamfered edge must always be the leading edge of the wheel whenever a tire is pressed onto a wheel.

g. Center wheel assembly on top of ram and make certain they match squarely.

h. Position new tire on top of wheel and tire assembly. Align new tire and wheel so the two are concentric with each other.

i. Start pressing new tire onto wheel and worn tire off the wheel. Run press slowly for first couple of inches of travel because this is the critical state of the pressing operation.

j. If tire begins to cock, stop press immediately and realign tire. A sharp jar with a soft mallet will usually realign tire on wheel.

k. If wheel is to be recessed in tire, stop press after tire is started on the wheel.

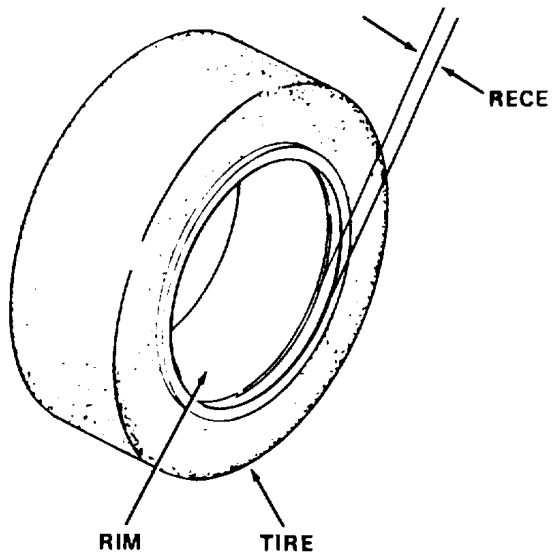

Figure 7-6. Wheel recess measurement.

l. Position spacer, refer to step *e,* inside the new tire so it rests squarely on the outer edge of the wheel. Continue pressing until new tire is correctly positioned on the wheel.

m. Release press and remove wheel, with new tire assembled, from ram. Remove worn tire from press table. Wipe off grease and inspect wheel and tire assembly.

7-8. Tire Installation

Refer to paragraph 7-4 and install the wheel and tire on the lift truck.

CHAPTER 8
REPAIR OF STEERING SYSTEM

Section I. DESCRIPTION

8-1. General

The power steering system consists of the steering wheel, steering valve, steering cylinder, steering axle and wheels. The steering axle is mounted at the rear of the truck. Hydraulic pressure for the system is supplied by the hydraulic pump. Rotation of the steering wheel operates the steering valve, sending hydraulic pressure to the steering cylinder. Movement of the cylinder rod rotates a pivot arm on the axle. Two tie rods connected to the pivot arm are attached to the wheel spindles. As the arm rotates, the spindles are pulled or pushed in the direction of the turn, turning the wheels. Refer to figure 8-1 for a view of the power steering system.

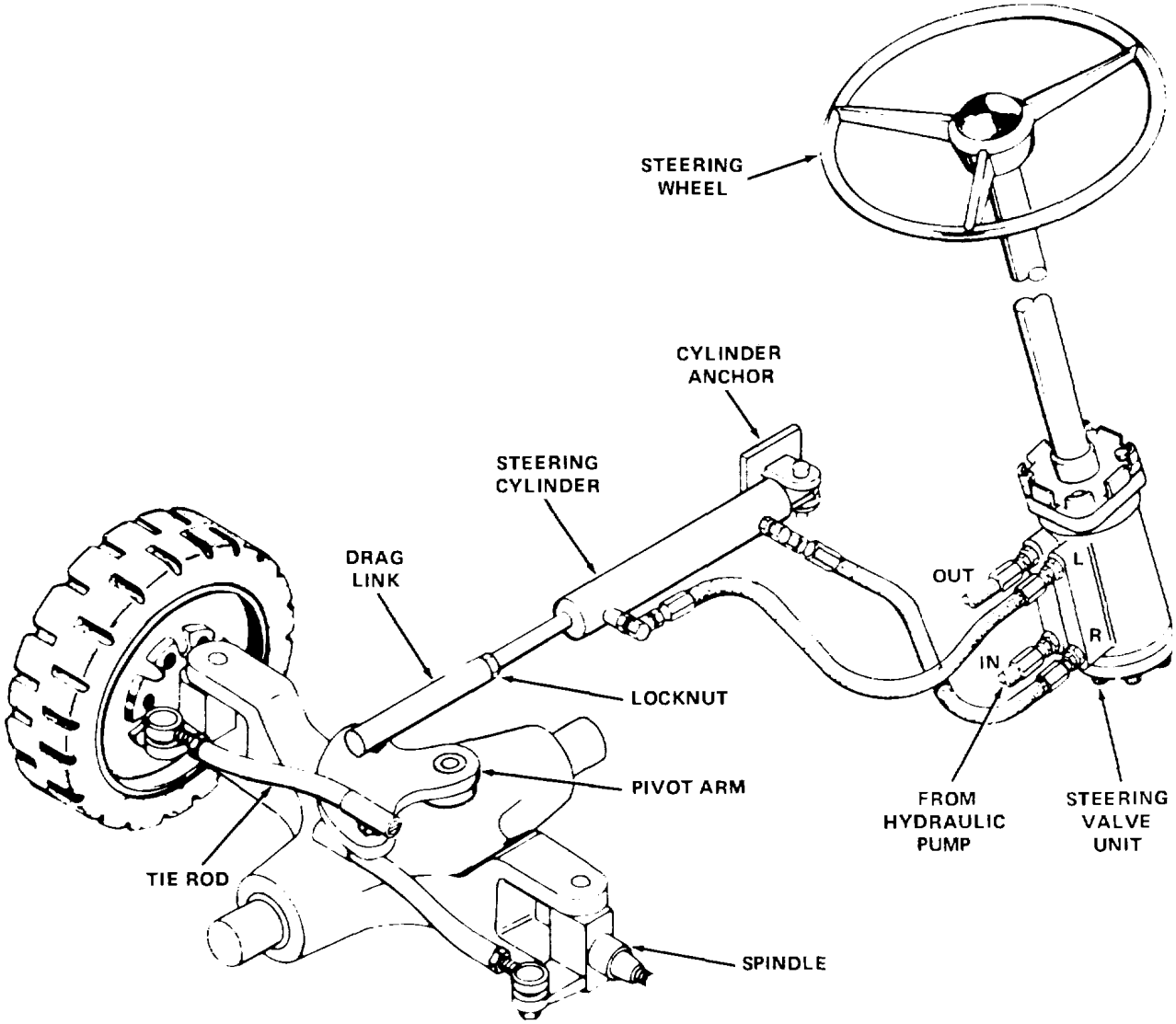

Figure 8-1. Power steering system.

8-2. Steering Systems Operation

Hydraulic oil is stored in the common reservoir and is delivered to the steering valve by the hydraulic pump. Depending on direction of turn, oil under pressure is delivered to one end of the steering cylinder. This pressure forces the cylinder rod to move, rotating the pivot arm and tie rods. The tie rods move the steering axle spindles, turning the wheels.

Section II. REPAIR OF STEERING CYLINDER

8-3. Description

The steering cylinder, mounted to the frame and steering axle on the left side of the truck, is a double acting cylinder. It provides the main force to make steering of the truck easier for the operator.

8-4. Steering Cylinder, Removal and Disassembly

a. Removal. Refer to TM 10-3930-630-12 and remove the steering cylinder and drag link.

b. Disassembly. Disassemble the steering cylinder in numerical sequence as illustrated on figure 8-2.

8-5. Steering Cylinder, Cleaning, Inspection and Repair

a. Clean all parts with cleaning solvent (Fed. Spec. P-D-680) and dry thoroughly.

b. Inspect tube bore, rod head and piston for cracks, scratches, scoring and other damage. Repair or replace damaged components.

c. Replace all seals and packing.

d. Prior to assembling, coat all components with clean hydraulic oil to aid in installation and provide initial lubrication.

8-6. Steering Cylinder, Reassembly and Installation

a. Reassembly. Reassemble the steering cylinder in reverse numerical sequence as illustrated on figure 8-2.

b. Installation. Refer to TM 10-3930-630-12 and install the steering cylinder.

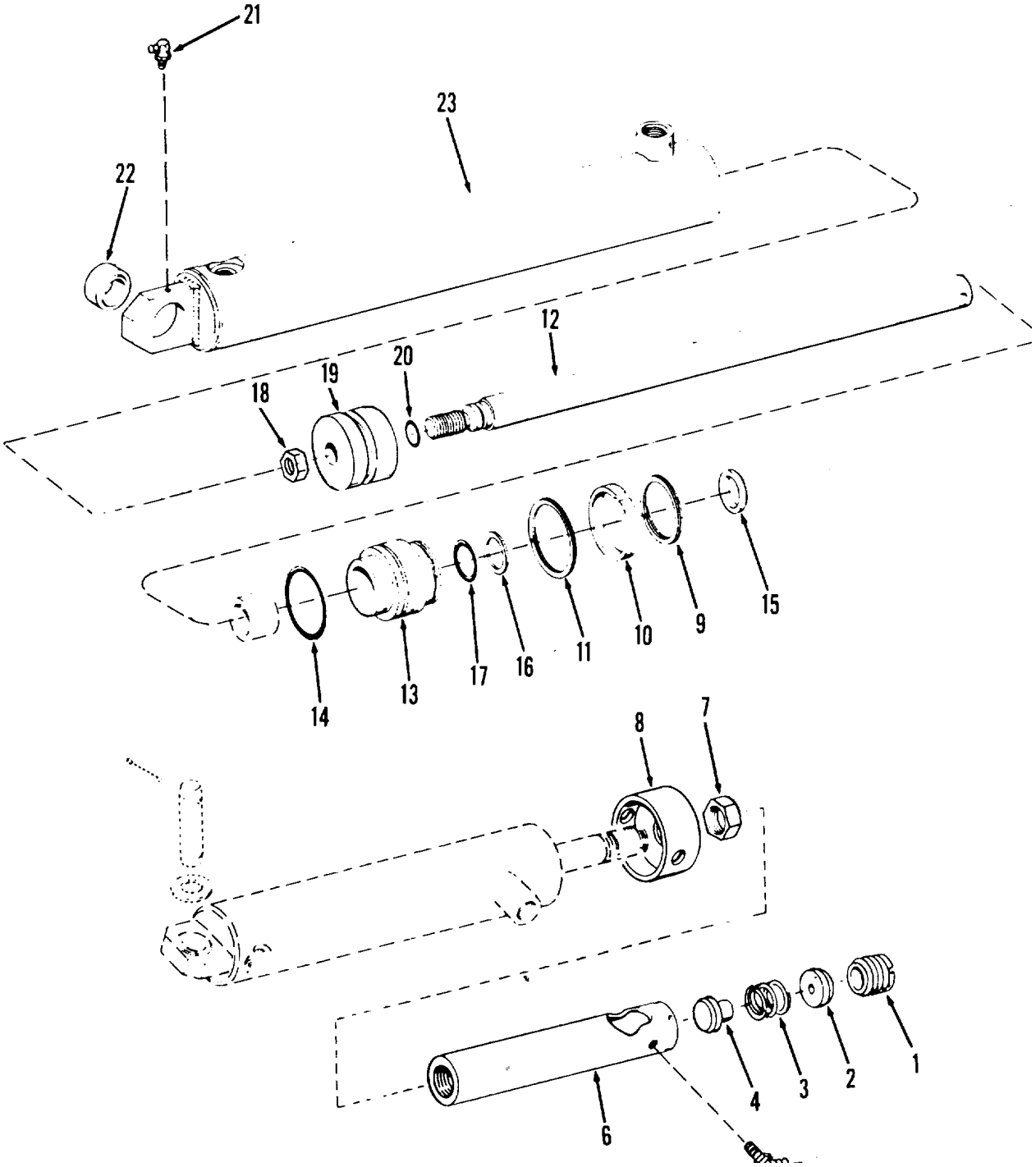

1	Adjusting plug	7	Jam nut	13	Head	19	piston
2	Ball set	8	Spacer	14	Head seal	20	Rod seal
3	Spring	9	Lock ring	15	Rod wiper	21	Lubricating fitting'
4	Link plug	10	pacer	16	Backup washer	22	Bearing
5	Lubrication fitting	11	Lock ring	17	Packing	23	Cylinder tube
6	Link socket	12	Cylinder rod	18	Jam nut		

Figure 8-2. Power steering cylinder, disassembly and reassembly.

Section III. STEERING GEAR VALVE

8-7. Description

The steering gear valve is mounted at the bottom of the steering shaft. It is connected to the hydraulic pump and steering cylinder with hydraulic hoses. Rotation of the steering wheel actuates the valve.

8-8. Steering Gear Valve, Removal and Disassembly

a. Removal. Refer to the paragraph 2-15 and remove the steering gear valve.

b. Disassembly.

(1) Steering wheel and horn button. Refer to TM 10-3930-630-12 and remove the steering wheel and horn button.

(2) *Steering wheel column.*

(a) Remove screws(1, fig.8-3), brush assembly (2) and connector (3) from column (14).

(b) Working through brush plate opening, disconnect horn wire (4) from contact ring (15).

(c) Remove horn wire (4), ferrule (5), contact spring (6) and washer (7) by slowly pulling wire from shaft (9).

(d) Remove retaining ring (8) from column (14) and slide shaft (9) and bearing (11) from column (14).

(*e*) Remove bearing retaining ring (10) and press bearing (11) from shaft (9) and remove second bearing retaining ring (12) from shaft. Remove contact ring (15) and insulator (16).

(f) Mark two screw hole locations on column (14) so ports will be in correct location at assembly.

(g) Remove screws (13) and column (14) from end plate (23).

(3) *End cap.*

(a) Clamp valve assembly in vise with end cap (18) facing up and remove screws (17).

(b) Remove end cap (18), rotor (19), plate (20) and drive shaft (21) from control assembly housing (38).

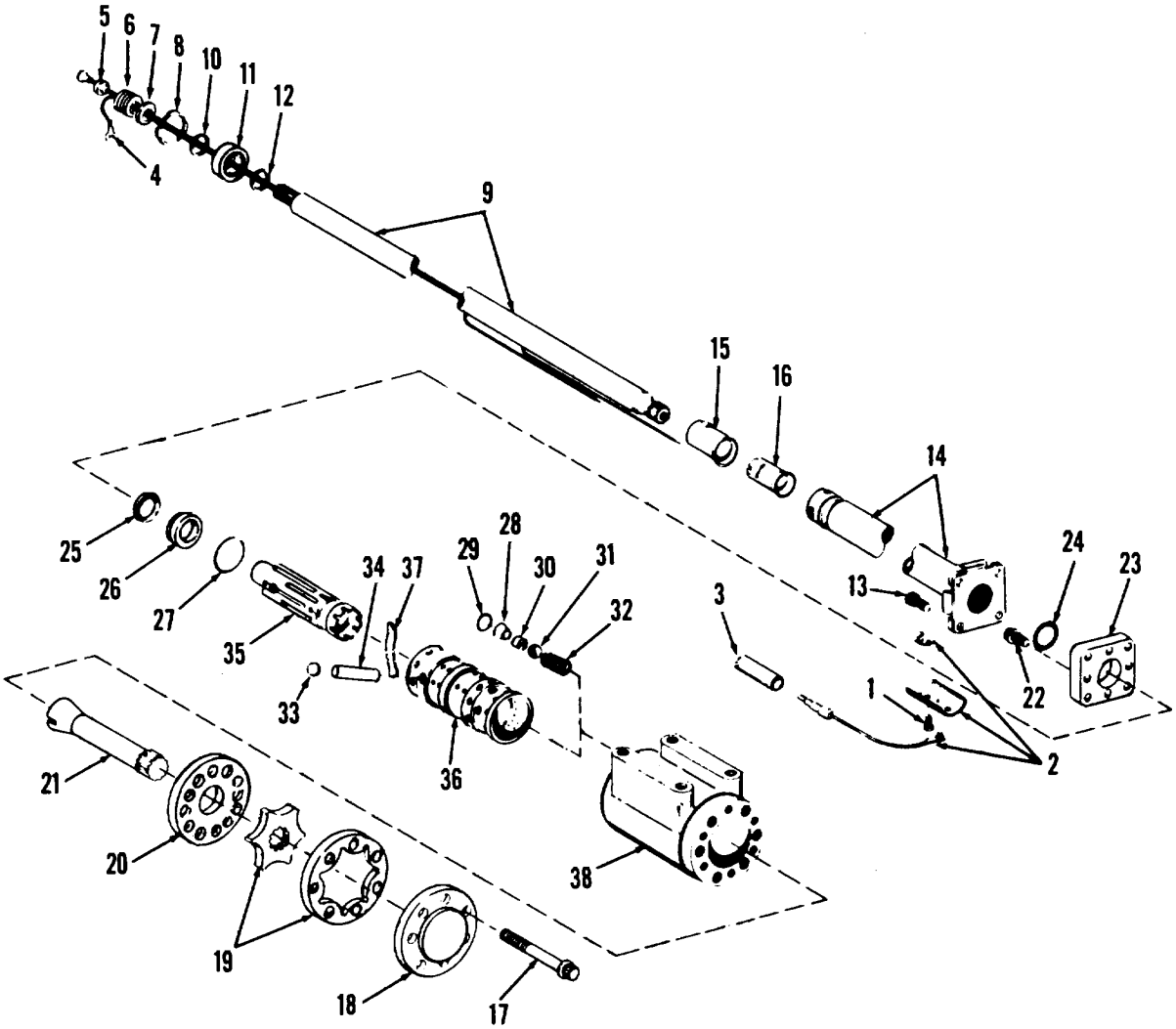

1	Screw	10	Retaining ring	19	Rotor	28	Plug	37	Spring
2	Brush assembly	11	Bearing	20	End plate	29	Packing	38	Housing
3	Connector	12	Retaining ring	21	Drive shaft	30	Seat		
4	Wire	13	Screw	22	Screw	31	Ball		
6	Ferrule	14	steering column	23	Plate	32	Spring		
6	Contact spring	15	Contact ring	24	Oil seal	33	Disk		
7	Contact washer	16	Insulator	25	Seal	34	Pin		
8	Retaining ring	17	Screw	26	Bushing	35	Control spool		
9	Shaft	18	End cap	27	Packing	36	Control sleeve		

Figure 8-3. Steering gear valve, disassembly and reassembly.

(4) Control spool rotation. Remove the control assembly from vise and check for free rotation of control spool (35) and sleeve (36). Install assembly in vise as shown in figure 8-4 and rotate shaft. Shaft should rotate freely.

(a) Place a wooden block across vise throat to support spool parts.

(b) Clamp the control assembly across port face with control end up and remove mounting plate screws (22, fig. 8-3).

(c) Hold spool assembly down against wooden block and lift off mounting plate (23).

(d) Inspect mating surfaces of plate and control for leakage paths and wear. Remove and discard oil seal (24) and shaft seal (25) from mounting plate (23).

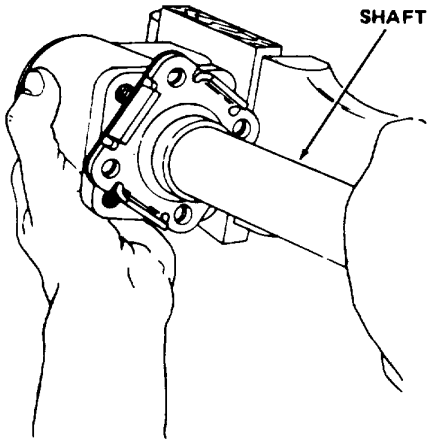

TA067423

Figure 8-4. Checking control spool.

(5) *Control assembly.*

(a) Remove bushing (26) and packing (27) from control assembly.

CAUTION

Use extreme care when removing control spool and sleeve. The parts are closely fitted and must be rotated slightly as they are withdrawn.

(b) Place port face of housing (38) on a solid surface and remove the control spool and sleeve from housing (38).

CAUTION

Do not pry against edge of hole in housing bore when removing valve seal plug.

(c) Using a small bent tool or wire, remove valve seal plug (28) from housing by reaching it through "out" port and pushing upwards. See figure 8-5. Remove packing (29, fig. 8-3).

(d) With housing (38) in vise, control end up, unscrew check seat (30), using a hex wrench.

(e) Remove housing from vise and tip up. Tap housing lightly with palm of hand and allow check valve seat (30), ball (31) and spring (32) to fall out into other hand.

(f) Remove disks (33) and centering pin (34) from the control spool and sleeve.

(g) Push inside lower edge of spool (35) so spool moves toward splined end and remove spool carefully from sleeve (36).

(h) Push centering spring set (37) out of spring slot in spool (35).

8-9. Steering Gear Valve, Cleaning, Inspection and Repair

a. Clean all parts with cleaning solvent (Fed. Spec. P-D-680). Cleaning may be done during disassembly and parts set to dry on clean paper towel.

b. Inspect all moving parts to make sure they have not been scored or damaged by dirt particles. Smooth burnished surfaces are normal in many areas. Any slightly scored parts may be cleaned by hand rubbing with 600-grit abrasive paper.

c. Prepare all surfaces of control assembly for assembly as follows:

(1) Place a piece of 600-grit abrasive paper face up on a piece of plate glass or similar material.

(2) Clean the ends of the star gear first to remove any sharp grit from the paper which could produce scratches.

(3) Clean both sides of the ring gear, both sides of the plate, the 14-hole end of the housing, and the flat side of the end cap.

(4) Stroke each surface across the abrasive several times and check the results. Any small bright areas indicates a burr which must be removed. When polishing the parts, hold them as flat as possible against the abrasive. After 6 to 10

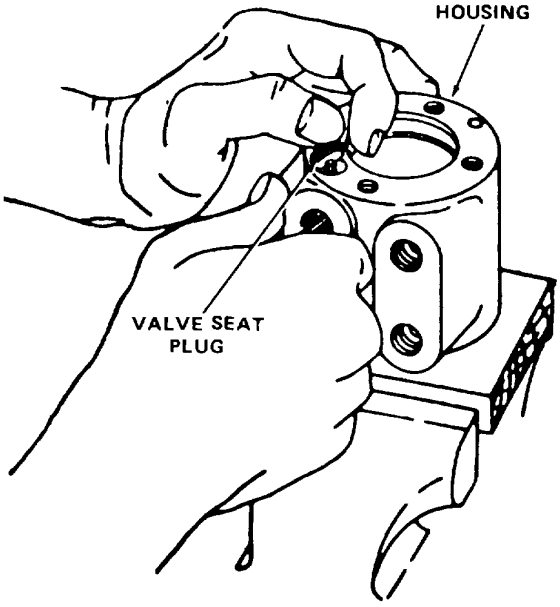

TA067424

Figure 8-5. Removing check valve seat plug.

strokes across the abrasive, check the part to see if it is polished. After each part is polished, rinse clean in solvent, blow dry with air, and place it where it can remain absolutely clean until assembly.

d. Replace all packing and oil seals. Replace all other parts as authorized.

8-10. Steering Gear Valve, Reassembly and Installation

a. Control Assembly, Reassembly

(1) Install clean wooden block in a vise to

provide platform for assembly operations.

(2) Place housing (38) on wooden block and install check valve spring (32) into check valve hole, with large end of spring down.

(3) Drop check ball (31) into check valve hole making sure it rests on small end of spring.

(4) Place check valve seat (30) on hex wrench and screw into housing behind ball. Machined counterbore of seat must face ball.

(5) Lower wooden block into vise and place housing on block, control end up. Clamp vise jaws lightly across housing port surface.

(6) Tighten valve seat (30) to 151 inch pounds (18.5 N m). Test ball action by pressing against it with a small clean pin. Ball should move freely.

NOTE

Ball need not be snug against seat to function properly.

(7) Carefully install spool (35) and sleeve (36) into housing. Be sure that spring slots of both spool and sleeve are at the same end. Rotate spool carefully while sliding parts together. Check for free rotation.

CAUTION

Spool must rotate smoothly in sleeve with only finger tip force applied at splined end.

(8) Loosen vise and lift control assembly from vise. Raise wooden block in vise and set control assembly on block. Align spring slots of sleeve and spool.

(9) Stand control spool and sleeve on end and insert a flat tool through slots of both parts.

(10) Position three pairs of centering springs (37) on bench so extended edge is down and center section is together.

(11) Install one end of positioned spring set (37) on flat tool. Compress extended end of spring set and push it into control spool and sleeve as shown in figure 8-6, withdrawing flat tool at the same time.

(12) Install spring set by aligning each spring so that entire set is flush with upper surface of control spool and sleeve.

(13) Install cross pin (34, fig. 8-3) through spool and sleeve and push into place until pin is flush or slightly below sleeve diameter at both ends. Install disks (33).

CAUTION

Use extreme care so the control assembly does not lose alignment when entering housing (38).

(14) Place housing (38) on a solid wooden surface with the port face down. Install spool assembly with the splined end of spool entering the 14-hole end of the housing first. Push parts gently into place with a slight rotating motion.

CAUTION

Do not pull control assembly beyond flush position or cross pin (34) will drop into housing discharge groove.

(15) Install control assembly into housing bore until end of assembly is flush with 14-hole end of housing.

(16) Rotate splined end of control assembly to check for free rotation.

(17) Install new packing (29) and check plug (28) in check plug hole. Use a steady pressure on plug and rock it slightly so packing slides in smoothly and without damage.

(18) Install new packing (27) on spool (35).

(19) Seat cap locator bushing (26) with large diameter up, evenly against spool in housing.

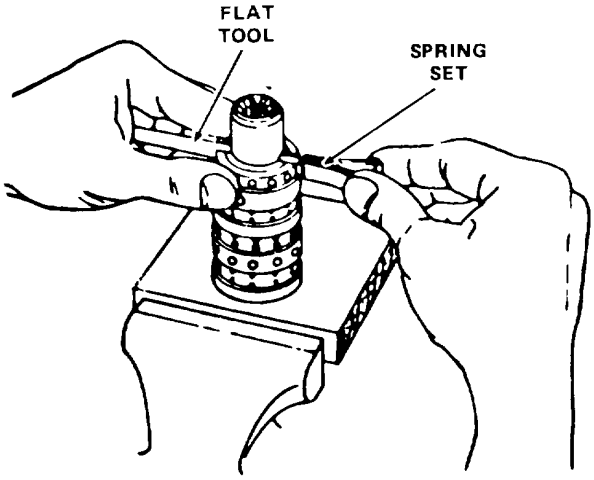

TA067425

Figure 8-6. Installing centering spring set.

b. Mounting Plate, Reassembly

(1) Check mounting plate (23) seal grooves for cleanliness and smooth condition.

(2) Install new quad ring seal (25) and oil seal (24) into grooves in mounting plate (23).

NOTE

Oil seal lip must face away from plate (23).

(3) Place the mounting plate over spool shaft and slide it down smoothly in place over cap locator bushing (26) to prevent damage to seals.

(4) Align holes in mounting plate (23) with tapped holes in housing (38). Mounting plate must rest fairly flush against end of housing so that cap locator bushing is not cocked.

(5) Install mounting plate screws (22) and torque to 150 inch pounds (16.9 N-m).

c. End Plate Reassembly.

(1) Position control housing (38) in vise and clamp in position with the end plate surface up.

(2) Check that the control spool is flush or

slightly below surface and that surface is clean.

(3) Place end plate (20) over control spool and sleeve. Align holes in plate with tapped holes in housing.

(4) Install rotor (19) on assembly and align screw holes.

(5) Place splined end of drive shaft (21) in rotor splines. Slot in end of drive shaft must be aligned with outside diameter valleys of gear as shown in figure 8-7.

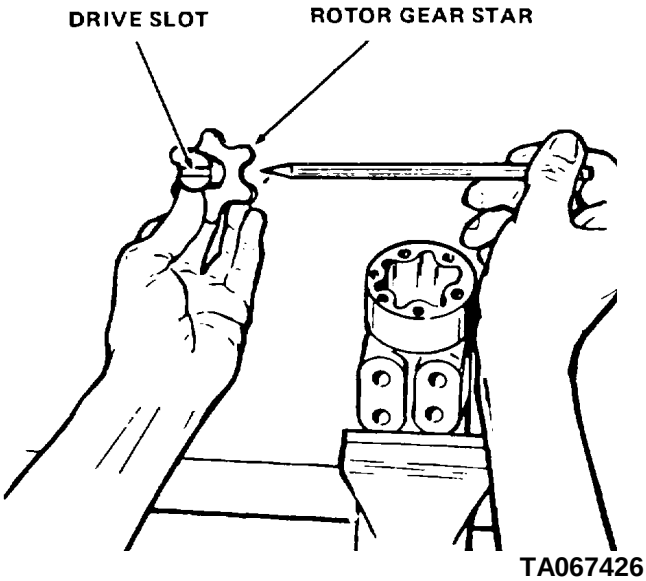

Figure 8-7. Drive shaft alignment.

(6) Push splined end of drive shaft (21) through rotor until spline extends about one-half its length beyond rotor surface. Note position or direction of cross pin (34) in the assembly.

CAUTION

Alignment of cross slot in shaft with valleys of gear (fig. 8-7) determines the proper valve timing of the unit. There are 12 teeth on the spline and 6 on the gear. Alignment will be right in 6 positions and wrong in 6 positions. Should the parts slip out of position during installation, make certain it is corrected.

(7) Install drive shaft and rotor into rotor ring (19), drive shaft first, and slowly rotate until cross slot in drive shaft engages cross pin. Splined end of drive shaft will drop against rotor when slot engages pin.

(8) Place end cap (18) over assembly and install screws (17), finger tight, to maintain alignment of parts.

(9) Secure assembly in vise and torque screws to 150 inch pounds (18.5 N•m).

d. Column Reassembly.

(1) Note match marks on column (14) and secure column to mounting plate with screws (13). Torque screws to 280 inch pounds (7728.0 cm/g).

(2) Install retaining ring (12), bearing (11), and second retaining ring (10) on shaft (9).

(3) Install horn wire (4) through washer (7), spring (6), ferrule (5) and partially through shaft (9). Bring wire out of shaft and connect to contact ring (15).

(4) Insert insulator (16) into contact ring and slide both parts, gradually pulling back on horn wire, on shaft (9).

(5) Insert shaft into column (14) and secure with large retaining ring (8). Rotate shaft to engage splines on shaft with splines in spool.

(6) Install brush assembly (2) on column with brushes in contact with contact ring. Secure brush assembly with screws (1).

(7) Install connector (3) on brush wire.

e. Installation. Refer to TM 10-3930-630-12 and install steering wheel and horn button. Refer to paragraph 2-17 and install steering valve.

CHAPTER 9
REPAIR OF BRAKE SYSTEM

Section I. SERVICE BRAKES

9-1. General

Service brakes are supplied on the two front wheels and are used to stop the fork lift truck. The service brakes have a mechanically actuated hydraulic master cylinder which transmits a controlled braking pressure to the wheel cylinders located between the brake shoes of each drive wheel.

9-2. Service Brake, Removal and Disassembly

a. Refer to paragraph 7-2 and remove the front drive wheels.

b. The service brakes are disassembled in the removal procedure. Remove and disassemble the service brakes in numerical sequence as illustrated in figure 9-1.

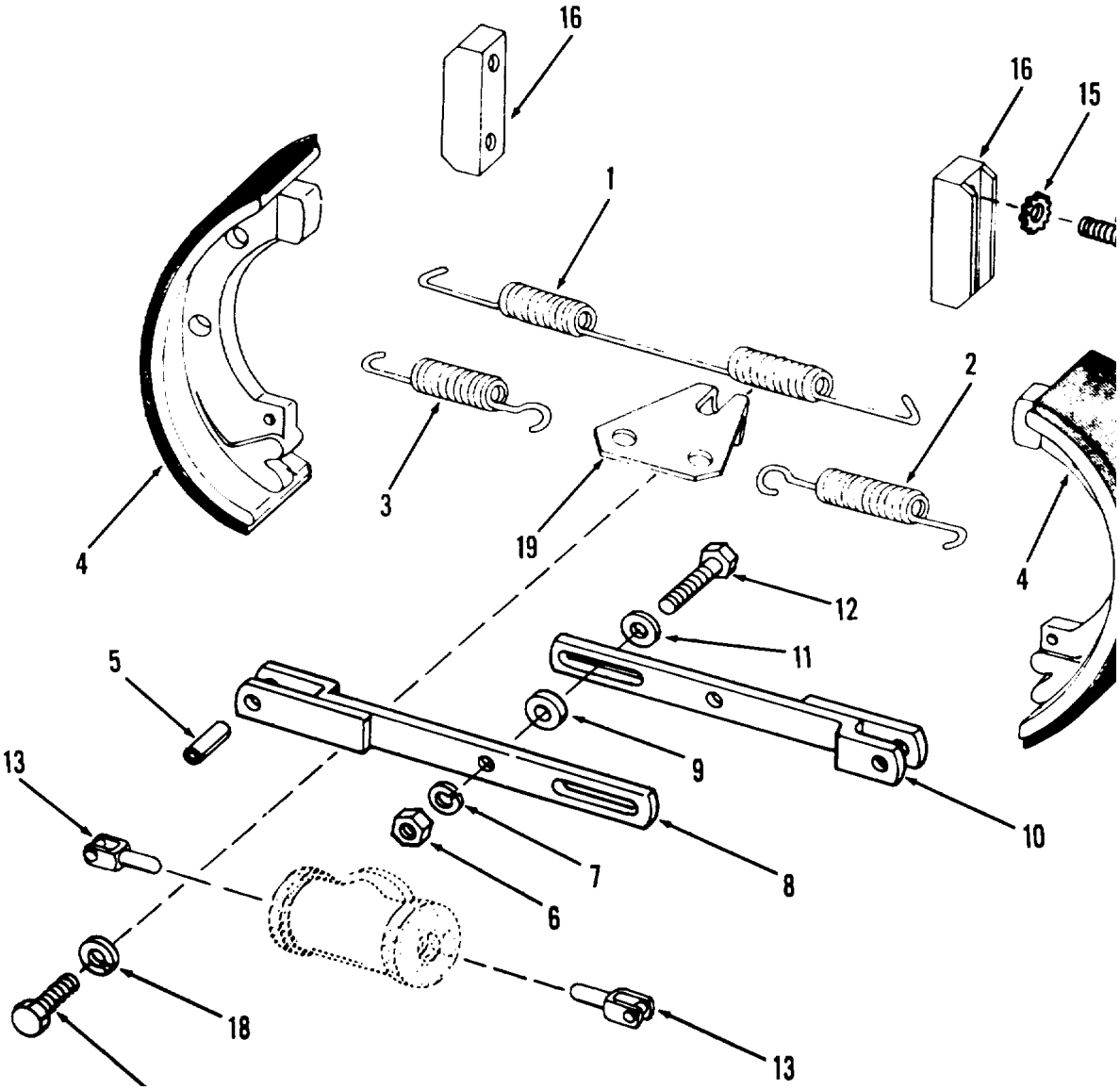

1 Spring	4 Brake shoe	7 Lock washer	10 Slide assembly	13 Link	16 Wear plate
2 Spring	5 Pin	8 Slide assembly	11 Washer	14 Screw	17 Screw
3 Spring	6 Nut	9 Washer	12 Screw	15 Lock washer	18 Lock washer
					19 Bracket

Figure 9-1. Service brakes, disassembly and reassembly.

9-3. Service Brake, Cleaning, Inspection and Repair

NOTE

When handling brake shoes, be careful not to get grease or dirt on brake linings as serious damage may result.

a. Inspect springs for cracks and brittleness. Upper return spring (1, fig. 9-1) must have a free length of 7.5 inches (190.5 mm) inside hoops, initial tension must be 30 pounds (13.5 kg) and initial stretch of 0.5 inch (12.7 mm). Lower return spring (2) must have a free length of 3.0625 (77.7 mm) inside hooks, initial tension of 30 pounds (13.5 kg) and initial stretch of 0.25 inch (6.35 mm). Replace unserviceable springs.

b. Brake shoe replacement is necessary if any of the following problems are observed.

(1) Lining worn to shoe mounting.
(2) Grease or hydraulic fluid soaked linings.
(3) Linings severely burned or charred.
(4) Linings deeply scored.
(5) Brake mounting worn, twisted or out of round.
(6) Cracked shoes.

c. The brake shoes (4, fig. 9-1) employ bonded linings. If replacement is necessary, the complete brake shoe must be replaced.

9-4. Service Brake, Reassembly and Installation

a. Service brakes are reassembled during the installation procedure. Install and reassemble the service brake in reverse numerical sequence as illustrated in figure 9-1.

b. Refer to paragraph 7-4 and install the front drive wheels.

Section II. WHEEL CYLINDER

9-5. Description

a. The hydraulic wheel cylinder houses two opposed pistons which actuate the opposed brake shoes. The pistons, rubber cups and springs are held in place, in the cylinder, by the brake shoe mechanical pressure.

b. The open ends of the cylinders are protected with rubber boots.

9-6.Wheel Cylinder, Removal and Disassembly

a. Removal. Refer to TM 10-3930-630-12 and remove the wheel cylinder.

b. Disassembly. Disassemble the wheel cylinder in numerical sequence as illustrated in figure 9-2.

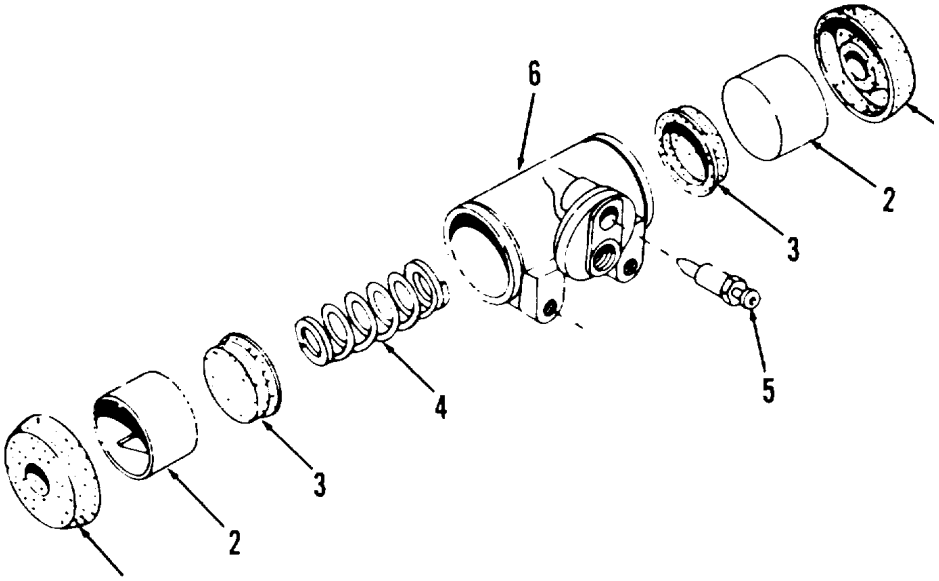

TA067428

1 Cylinder boot
2 Cylinder piston
3 Piston cup
4 Spring
5 Bleed screw
6 Cylinder body

Figure 9-2. Wheel cylinder, disassembly and reassembly.

9-7. Wheel Cylinder, Cleaning, Inspection and Repair

a. Wash all parts thoroughly in clean brake fluid. Use lint free cloth for cleaning.

b. Inspect all parts for wear, corrosion or other damage that might impair cylinder action. Replace unserviceable parts.

9-8. Wheel Cylinder, Reassembly and Installation

a. Reassembly. Reassemble the wheel cylinder in reverse numerical sequence as illustrated in figure 9-2.

b. Installation. Refer to TM 10-3930-630-12 and install the wheel cylinder.

Section III. MASTER CYLINDER

9-9. Description

a. Brake cylinder and fluid reservoir are combined in one casing and are joined by intake and by-pass ports located in the cylinder wall. Internal parts are removed or installed at push rod end.

b. The cylinder piston is operated through a push rod connected to the brake pedal.

9-10. Master Cylinder, Removal and Disassembly

a. Removal. Refer to TM 10-3930-630-12 and remove the master cylinder.

b. Disassembly. Disassemble the master cylinder in numerical sequence as illustrated in figure 9-3.

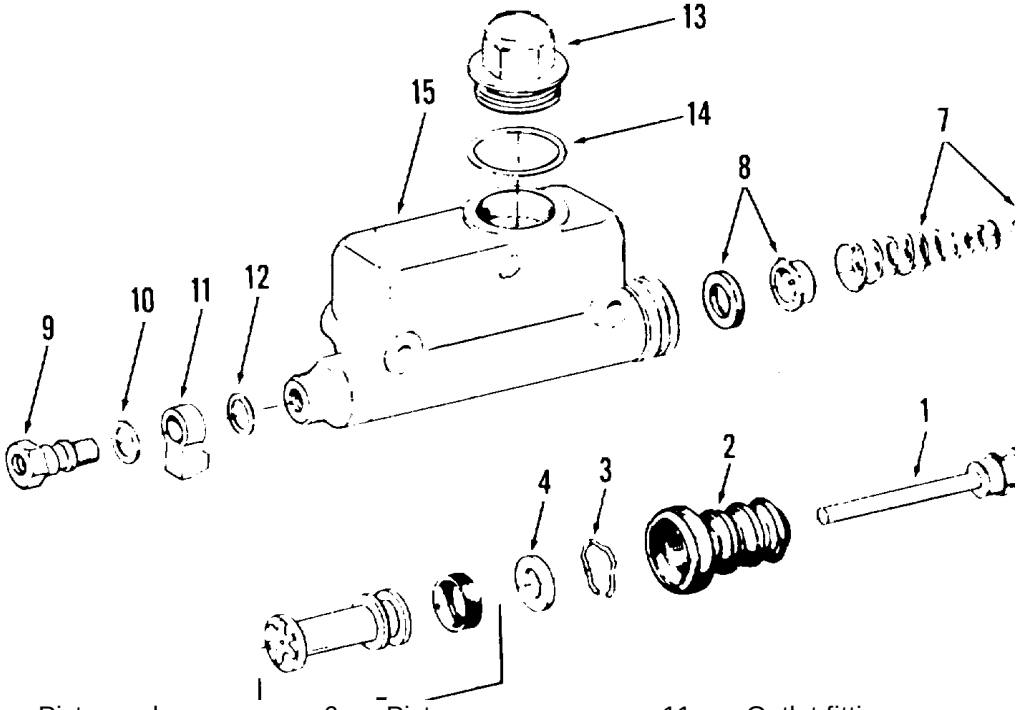

1	Piston rod	6	Piston cup	11	Outlet fitting
2	Piston boot	7	Spring	12	Fitting gasket
3	Lock wire	8	Valve assembly	13	Filler cap
4	Stop plate	9	Fitting bolt	14	Cap gasket
5	Piston	10	Bolt gasket	15	Cylinder body

TA067429

Figure 9-3. Master cylinder, disassembly and reassembly.

9-11. Master Cylinder, Cleaning, Inspection and Repair

a. Use a lint free cloth and clean all internal parts in clean hydraulic brake fluid.

b. Clean cylinder casting in cleaning solvent, (Fed. Spec. P-D-680). Finish cleaning with brake fluid to remove all traces of solvent.

c. Inspect cylinder bore for deep blemishes, pressure marks and discoloration. Remove minor marks and discoloration with crocus cloth. Deep blemishes will require reboring to resurface the cylinder wall. If resurfacing is necessary, use the following procedure:

(1) Coat walls of cylinder bore with hydraulic brake fluid.

(2) Secure master cylinder in a bench vise.

(3) Using honing equipment, remove material from cylinder bore in single passes.

(4) After each pass is completed, remove hone and inspect for scratches and pitting. Remove only enough material to recondition cylinder bore. Do not hone cylinder oversize.

NOTE

If the master cylinder has been honed oversize or greater than 1.007 inch (25.5 mm) it must be replaced.

d. Check to be certain intake and by-pass ports are open.

e. Inspect all other parts for corrosion, scratched or pitted piston bearing surfaces, rubber deterioration and spring action. Replace all damaged or worn parts.

f. If cylinder has been honed, replace all parts contained in repair kit.

9-12. Master Cylinder, Reassembly and Installation

a. Reassembly. Refer to figure 9-3 and reassemble the master cylinder as follows:

(1) Lubricate parts and cylinder bore with clean brake fluid.

(2) Secure cylinder body (15, fig. 9-3) in vise and replace gasket (14) and filler cap (13).

(3) Install outlet fitting (11), gaskets (10 and 12) and fitting bolt (9) into cylinder body.

(4) Carefully install spring (7), valve assembly (8), piston cup (6), piston (5) and stop plate (4).

NOTE

Largest end of piston spring and pressure valve must be toward outlet end of cylinder.

(5) Insert lock wire (3) making certain it is seated firmly in groove provided in end of cylinder.

(6) Install rubber boot (2) and push rod (1).

b. Installation. Refer to TM 10-3930-630-12 and install the master cylinder.

Section IV. PARKING

9-13. Description

a. The parking brake is a dual shoe mechanical brake, mounted at the drive shaft.

b. The brake mechanism requires no lubrication except at reassembly.

9-14. Parking Brake, Removal and Disassembly

a. Refer to TM 10-3930-630-12 and disconnect the drive shaft from the parking brake drum and to disconnect parking brake linkage.

b. The parking brake is disassembled during the removal procedure. Remove the parking brake in numerical sequence as illustrated in figure 9-4.

9-15. Parking Brake, Cleaning, Inspection and Repair

a. Check backing plate (10, fig. 9-4) for distortion, loose or sheared rivets and worn pawls. Replace all worn or damaged parts.

b. Check brake shoes (6) for worn pawl holes, lever contact areas or wear pads. Replace if necessary.

c. Always replace shoe return springs (4) during reassembly.

d. Inspect parking brake drum (3) for wear and out-of-round condition. Machine drum if possible.

9-16. Parking Brake, Reassembly and Installation

a. The parking brake is reassembled during the installation procedure. Install the parking brake in reverse numerical sequence as illustrated in figure 9-4.

b. Refer to TM 10-3930-630-12 to connect the drive shaft and the parking brake linkage.

9-17. Parking Brake, Adjustment

Refer to TM 10-3930-630-12 and adjust the parking brake.

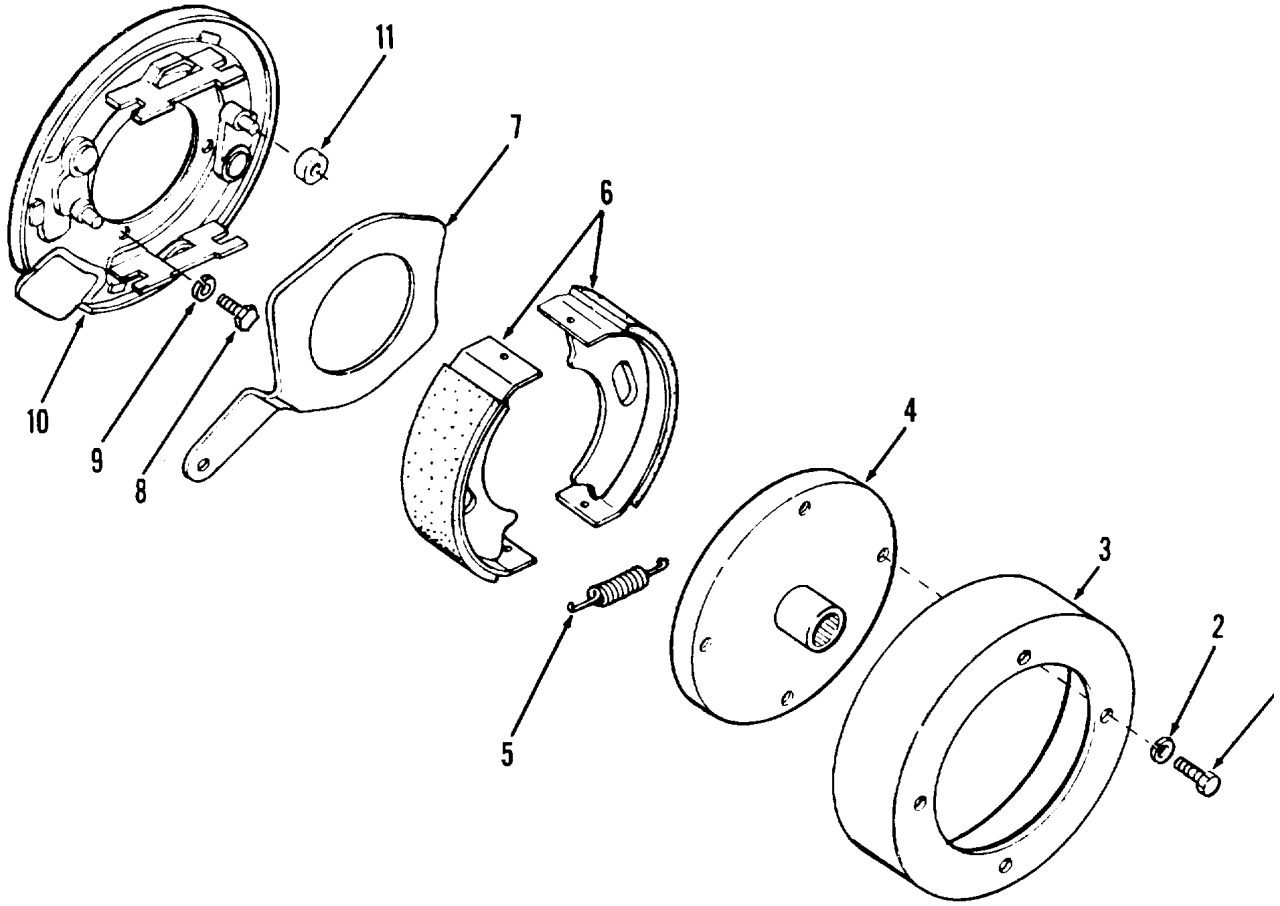

1	Screw	7	Brake lever
2	Lock washer	8	Screw
3	Brake drum	9	Lock washer
4	Flange	10	Backing plate
5	Spring	11	Roller
6	Brake shoe		

Figure 9-4. Parking brake, disassembly and reassembly.

CHAPTER 10
REPAIR OF FRONT AND REAR AXLES AND DRIVE SHAFT

Section I. REAR STEERING AXLE

10-1. Description

The steering axle supports the rear of the truck. The wheels are mounted on spindles. Connected to the spindles are the tie rods. As the steering cylinder operates and rotates the pivot arm the tie rods move the spindles and turn the wheels.

10-2. Steering Axle, Removal and Disassembly

a. Removal. Refer to paragraph 2-31 and remove the steering axle from the lift truck.

b. Disassembly. Disassemble the steering axle in numerical sequence as illustrated in figure 10-1. Nuts (33), lock washers (34) and screws (35) were removed when axle was removed from truck.

10-3. Steering Axle, Cleaning, Inspection and Repair

a. Clean all parts with cleaning solvent (Fed. Spec. P-D-680).

b. Inspect all moving parts for wear, corrosion or other damage.

c. Inspect all bearings for wear and damage.

d. Replace worn or deteriorated parts.

10-4. Steering Axle, Reassembly and Installation

a. Reassembly.

(1) Install retaining ring (31, fig. 10-1) and press lower bearing cup (30) in axle. Press upper bearing cup (29) in axle as shown in figure 10-2. Bearing cups must be firmly seated.

(2) Install upper seal (27, fig. 10-1) on pivot arm (26) and press upper bearing cone (28) on pivot arm (26) against shoulder. Refer to LO 10-3930-630-12 and fill seal and bearing cone with proper grease.

(3) Install pivot arm (26) with assembled bearing in center of axle assembly (43). Pack lower bearing cone (25) with grease (GAA) and install in axle. Fill seal (24) with grease (GAA) and install in axle.

(4) Install shoulder washer (23) in axle. Using a new nut (22) tighten washer against bearing cone with a torque wrench until cone begins to seat. Check torque as bearing begins to seat. Continue to tighten nut until torque is 15-25 foot pounds (20.3 to 33.8 N•m) greater than when bearing began to seat.

(5) Install roller bearings (21) in axle (43). Install two spindles (19) and plastic washers (20) in axle and install king pins (18) through bearings and spindles. Align king pin hole with hole in spindle and drive spring pins (17) through spindle and king pin.

(6) Install expansion plugs (16) and stake in place.

(7) Install spring (6) and seat (5) in tie rod tube (3). Loosely install plug (4). Install tube (3), jai nut (8) and cover (9) on tie rod end (7). Install tie rod end (7) through spindle (19) and secure with slotted nut (9) and cotter pin (1). Connect tie rod to ball stud (32). Tighten plug (4) to hold tie rod in position. Install remaining tie rod in same manner. Install lubrication fittings (10 and 11).

(8) Rotate pivot arm (26) back and forth several times. Check rotating torque in bearings. A torque of 15-25 foot pounds (20.3 to 33.8 N•m) will be required to rotate pivot arm in either direction.

(9) If rotating torque is less than 15 foot pounds (20.3 N m), tighten nut (22) an additional 5 foot pounds (6.7 N•m) as in (4) above.

(10) If rotating torque exceeds 25 foot pounds (33.8 N m), loosen nut (22) one full turn. Strike end of pivot arm at nut with a soft headed mallet to unseat bearings.

(11) Repeat (4), (9), and (10) as necessary to provide correct rotating torque. Stake nut as shown on figure 10-2 after proper torque is obtained.

(12) Install bearing (38, fig. 10-1) and housing (36) on axle.

(13) Install spacer (13), lock washers (14), nut (15) and adjusting screw (12) on truck frame.

(14) Install lubrication fitting (37) in housing (36).

(15) Install washer (40), jam nut (41) and adjusting screw (39) in the axle assembly.

(16) Install lubrication fittings (42) on axle (43).

(17) Nuts (33), lock washers (34) and screws (35) are installed when axle is secured to frame.

b. Installation.

(1) Refer to paragraph 2-29 and install steering axle.

(2) Refer to LO 10-3930-630-12 and lubricate steering axle.

(3) Refer to TMI 10-3930-630-12 and adjust steering axle, tie rods, and steering cylinder.

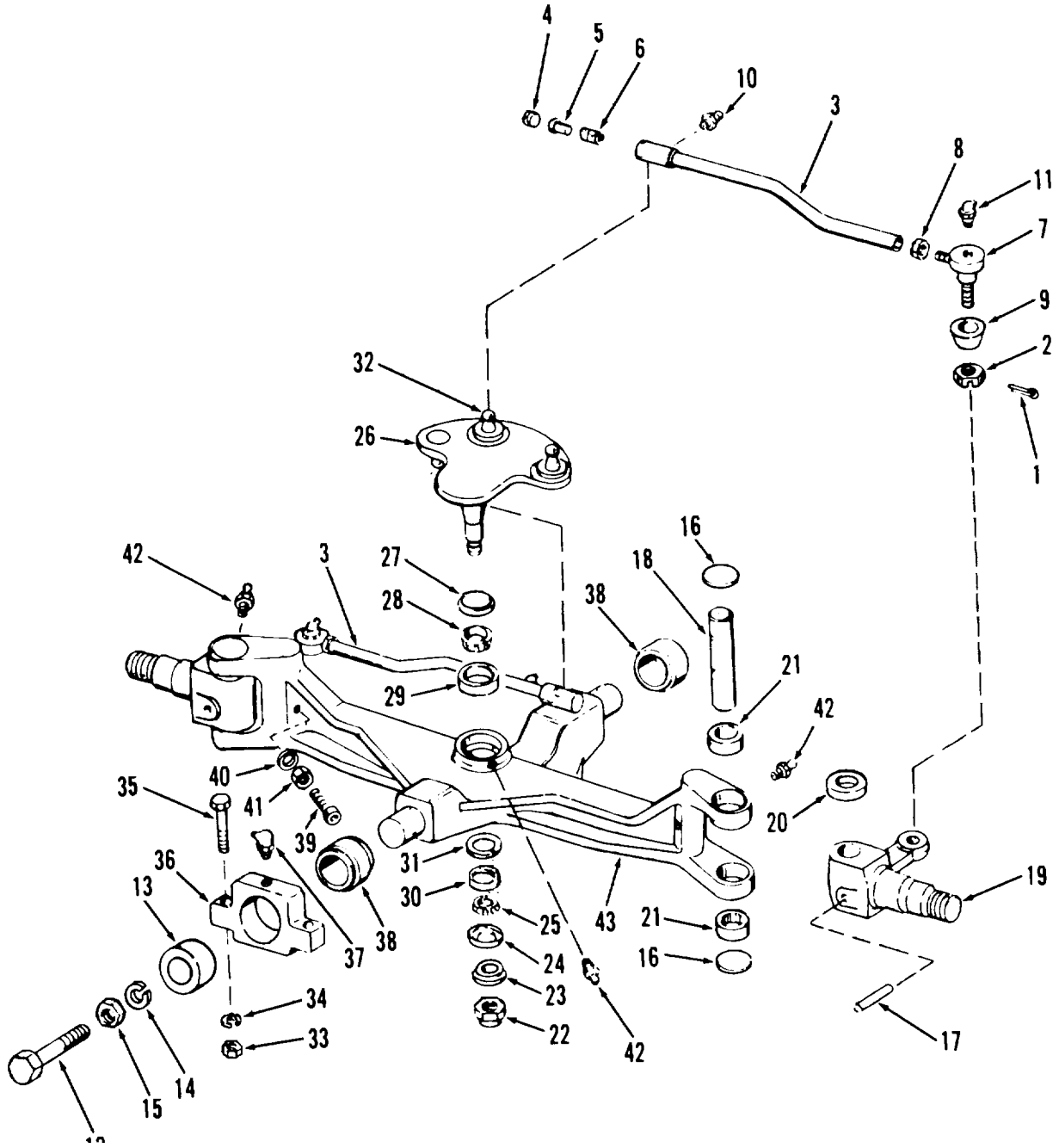

1	Cotter pin	9	Cover	17	Pin	25	Bearing cone	33	Nut
2	Slotted nut	10	Lubrication fitting	18	King pin	26	Pivot arm	34	Lock washer
3	Tube	11	Lubrication fitting	19	Spindle	27	Upper seal	35	Screw
4	Plug	12	Adjusting screw	20	Plastic washer	28	Bearing cone	36	Housing
5	Seat	13	Spacer	21	Roller bearing	29	Bearing cup	37	Lubrication fitting
6	Spring	14	Lock washer	22	Lock nut	30	Bearing cup	38	Bearing
7	Tie rod end	15	Nut	23	Shoulder washer	31	Retaining ring	39	Adjusting screw
8	Jam nut	16	Plug	24	Lower seal	32	Ball stud	40	Washer
				41	Jan nut				
				42	Lubrication fitting				
				43	Steering axle				

Figure 10-1. Steering axle, disassembly and reassembly.

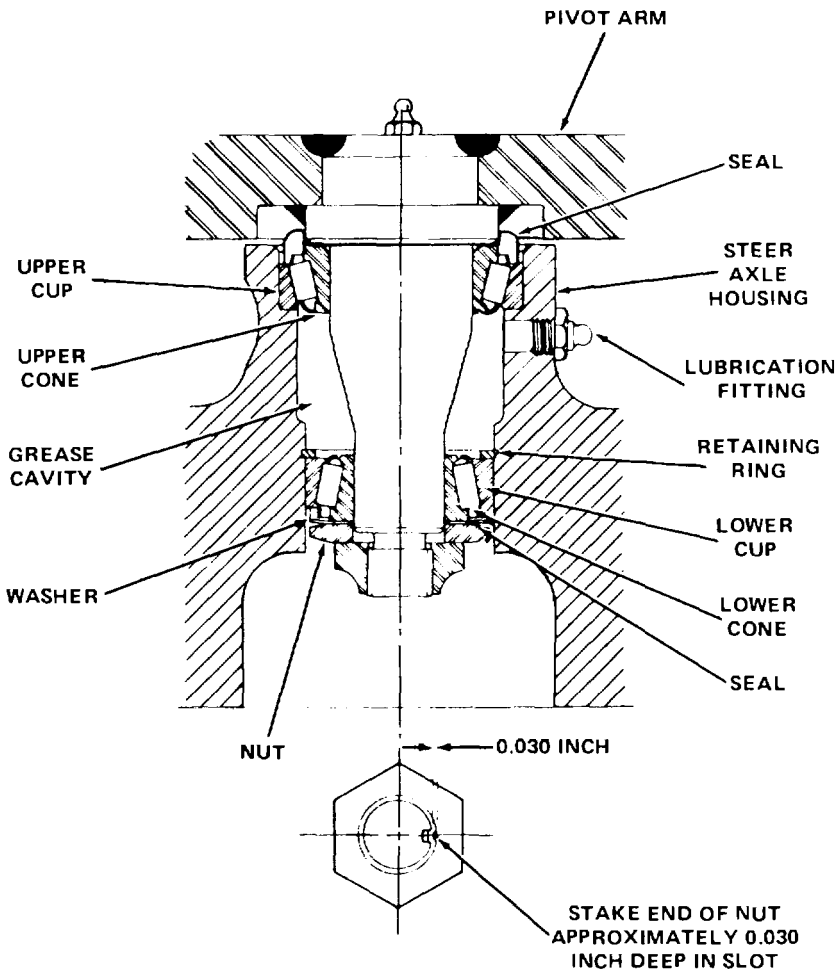

TA067432

Figure 10-2. Pivot arm bearing installation.

Section II. DRIVE SHAFT

10-5. General

The drive shaft is a conventional type. Universal joints at each end of the tube rotate with the shaft and connect to the parking brake drum and drive axle differential. The drive shaft connects the transmission to the parking brake and drive axle.

10-6. Drive Shaft, Removal and Disassembly

a. Removal. Refer to TM 10-3930-630-12 and remove the drive shaft.

b. Disassembly. Disassemble the drive shaft in numerical sequence as illustrated in figure 10-3.

10-7. Drive Shaft, Cleaning, Inspection and Repair

a. Inspect all bearings and bearing surfaces for evidence of extreme wear or damage.

b. Inspect shaft and universal joint mounting for cracks, breaks or other damage. Replace if damage is noted.

c. Replace all damaged or worn parts.

d. Refer to LO 10-3930-630-12 and pack bearings thoroughly with grease. Make certain grease fully covers all bearing surfaces.

10-8. Drive Shaft, Reassembly and Installation

a. Reassembly. Reassemble the drive shaft in reverse numerical sequence as illustrated in figure 10-3.

b. Installation. Refer to TM 10-3930-630-12 and install the drive shaft.

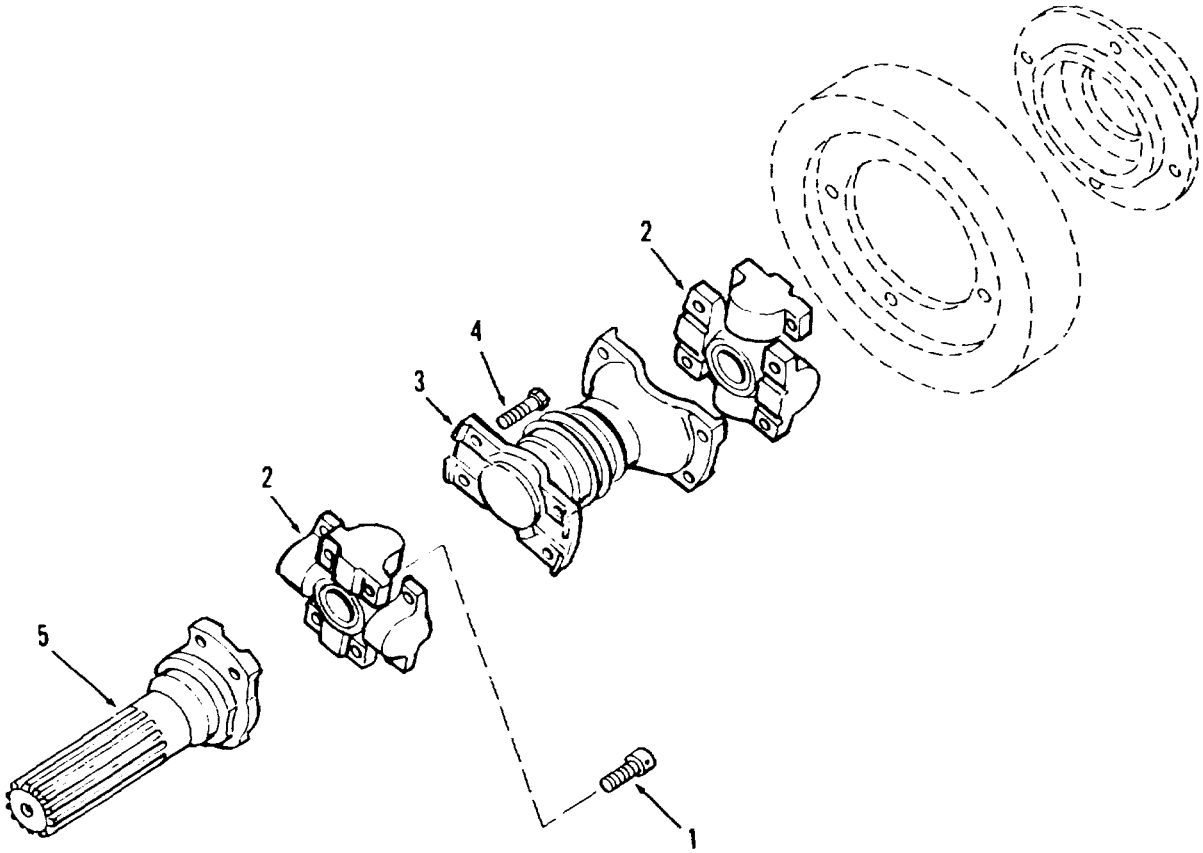

TA067433

1 Screw
2 Universal joint
3 Tube
4 Screw
5 Drive shaft

Figure 10-3. Drive shaft, disassembly and reassembly.

Section III. FRONT DRIVE AXLE

10-9. Description

a. The front drive axle propels the front wheels and provides motive force for the truck. It is connected to the transmission by a drive shaft. The service brakes are attached to the drive axle.

b. The transmission and torque converter are directly coupled to the engine flywheel. An output shaft, at the lower front of the transmission, is secured to the parking brake drum. The drive shaft is connected at one end to the parking brake drum and at the other end to the drive axle differential. Two axle shafts are splined to the differential and extend out to the wheels. The axle shafts engage the bull gears in the wheels and rotate the wheels. Axle spindles support the wheels and allow them to rotate on the wheel bearings.

10-10. Drive Axle, Removal and Disassembly

a. Removal.

(1) Refer to paragraph 2-28 and remove drive axle from truck.

(2) Refer to paragraph 7-2 and remove the drive wheel and bull gear.

(3) Refer to TM 10-3930-630-12 and remove the axle shaft, spindle and brake dust shield.

(4) Refer to paragraph 9-2 and remove the service brakes.

b. Disassembly. Disassemble the axle and axle shaft in numerical sequence as illustrated in 10-4.

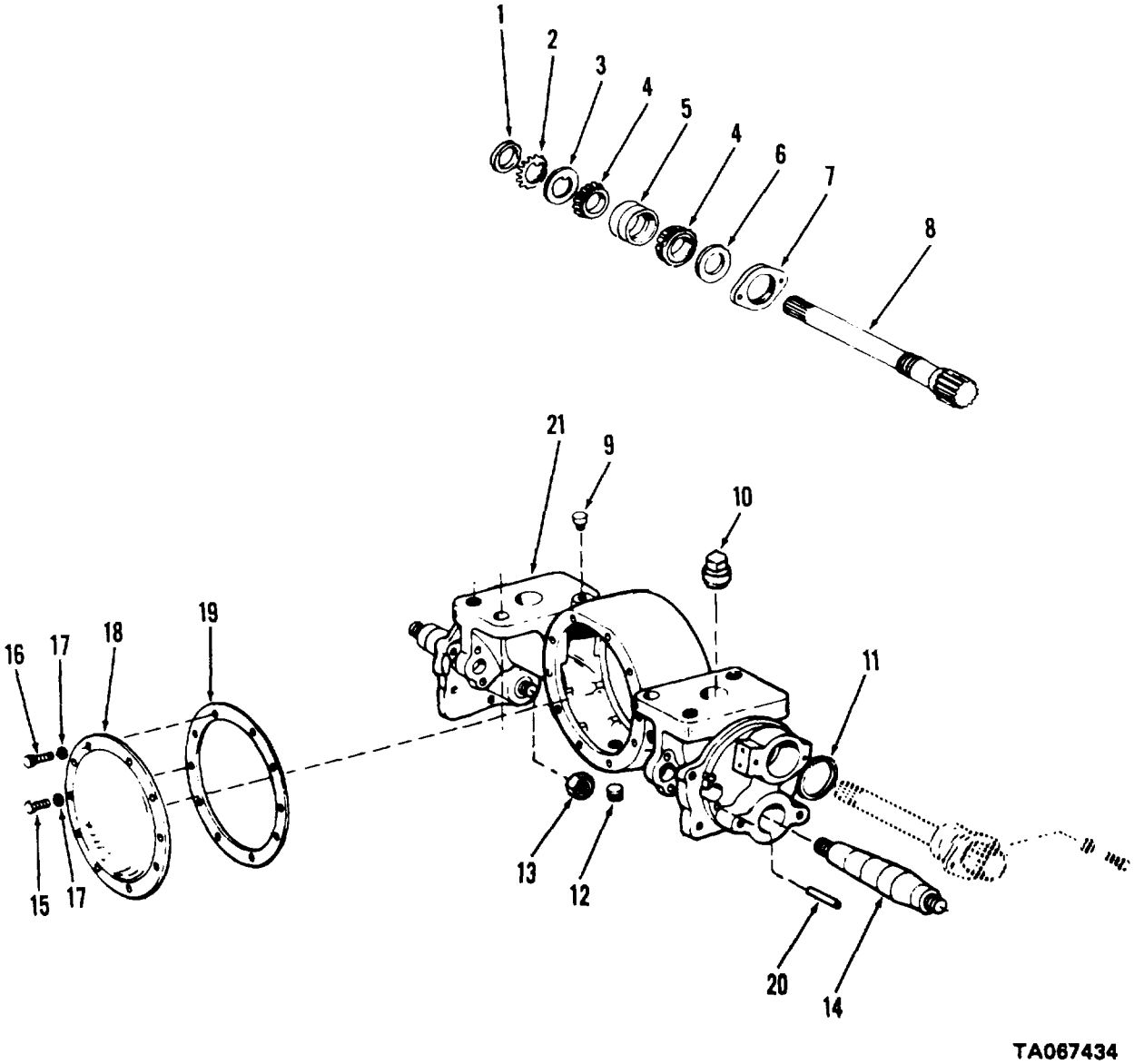

1	Nut	8	Shaft	15	Screw
2	Tab washer	9	Breather	16	Screw
3	Tab washer	10	Locating pin	17	Lock washer
4	Bearing cone	11	Seal	18	Cover
5	Bearing cup	12	Drain plug	19	Gasket
6	Seal	13	Spindle nut	20	Dowel pin
7	Cap	14	Spindle	21	Housing

Figure 10-4. Axle and axle shaft, disassembly and reassembly.

10-11. Drive Axle and Axle Shaft, Cleaning, Inspection and Repair

a. Clean all metal parts in cleaning solvent, (Fed. Spec. P-D-680) and dry thoroughly.

b. Inspect axle shaft for wear to bearing surface. Inspect pinion for broken or worn teeth. Bearing surface diameter must be 1.3775 to 1.3785 inches (34.9 to 35.0 mm).

c. Inspect bearing cones and cup for damage.

d. Inspect spindle for wear and damage.

e. Inspect axle housing for wear, cracks and other damage. Inspect mounting holes and

threaded holes for damage. Repair damaged threads if possible.

f. Inspect cover for cracks and damage. Discard cover gasket.

g. Check locating pin for secure mounting and damage.

h. Replace all unserviceable parts.

10-12. Drive Axle and Axle Shaft, Reassembly and Installation

a. Reassembly.

(1) Lubricate bearing cones (4, fig. 10-4) and cup (5) with grease per LO 10-3930-630-12.

(2) Install cap (7) and new seal (6) on shaft (8).

(3) Press bearing cones (4) and cups (5) on shaft (8).

(4) Secure bearings with washers (2 and 3) and nut (1). Lock nut by bending tabs of washer (2).

(5) Install new seal (11) in housing (21). Install new gasket (19) and install cover (18). Secure cover with screws (15 and 16) and lock washers (17).

b. Installation.

(1) Refer to paragraph 94 and install the service brakes.

(2) Refer to TM 10-3930-630-12 and install the axle shaft, spindle, and brake dust shield.

(3) Refer to paragraph 7-4 and install the drive wheel on the truck.

(4) Refer to paragraph 2-30 and install drive axle on the truck.

Section IV. DIFFERENTIAL

10-13. Description

The differential mounted on the rear of the drive axle, is connected to the drive shaft. Rotation of the drive shaft rotates the differential. The axle shafts are splined to the differential. As they rotate the ends of the axle shafts rotate in the bull gears. The bull gears and wheels are mounted at the outer ends of the axle and rotate to drive the truck.

10-14. Differential, Removal and Disassembly

a. Removal.

(1) Refer to paragraph 7-2 and remove the drive wheels. Refer to TM 10-3930-630-12 and disconnect drive shaft from differential.

(2) Refer to LO 10-3930-630-12 and drain the differential housing.

(3) Refer to TM 10-3930-630-12 and remove the parking brake cable at the brake actuating lever, and disconnect and plug the hydraulic brake lines.

(4) Using a suitable support for the differential remove the screws which mount the carrier and differential to the axle housing.

(5) Carefully remove carrier and differential assembly from the axle housing and place on a suitable work bench.

NOTE

It may be necessary to lightly tap the carrier housing in order to free it from seal.

(6) Remove and discard gasket between carrier housing and axle housing

(7) Match mark bearing caps and differential housing (fig. 10-5) to aid in proper alignment during reassembly

(8) Remove screws (1, fig. 10-6), lock washers (2) and bearing locks (3). Remove adjusting nuts (4) from bearing caps and housing. Remove lock wire (5) and screws (6) securing bearing caps (7) to housing. Remove bearing caps (7).

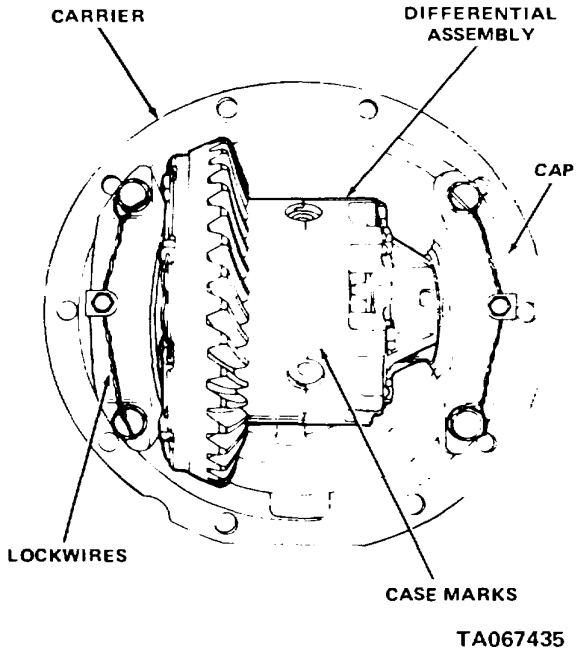

Figure 10-5. Differential, removal and installation.

10-15. Differential, Cleaning, Inspection and Repair

a. Clean all parts with cleaning solvent, (Fed. Spec.P-D-680).

b. Inspect bearings for damage and excessive wear. Replace if damage is noted.

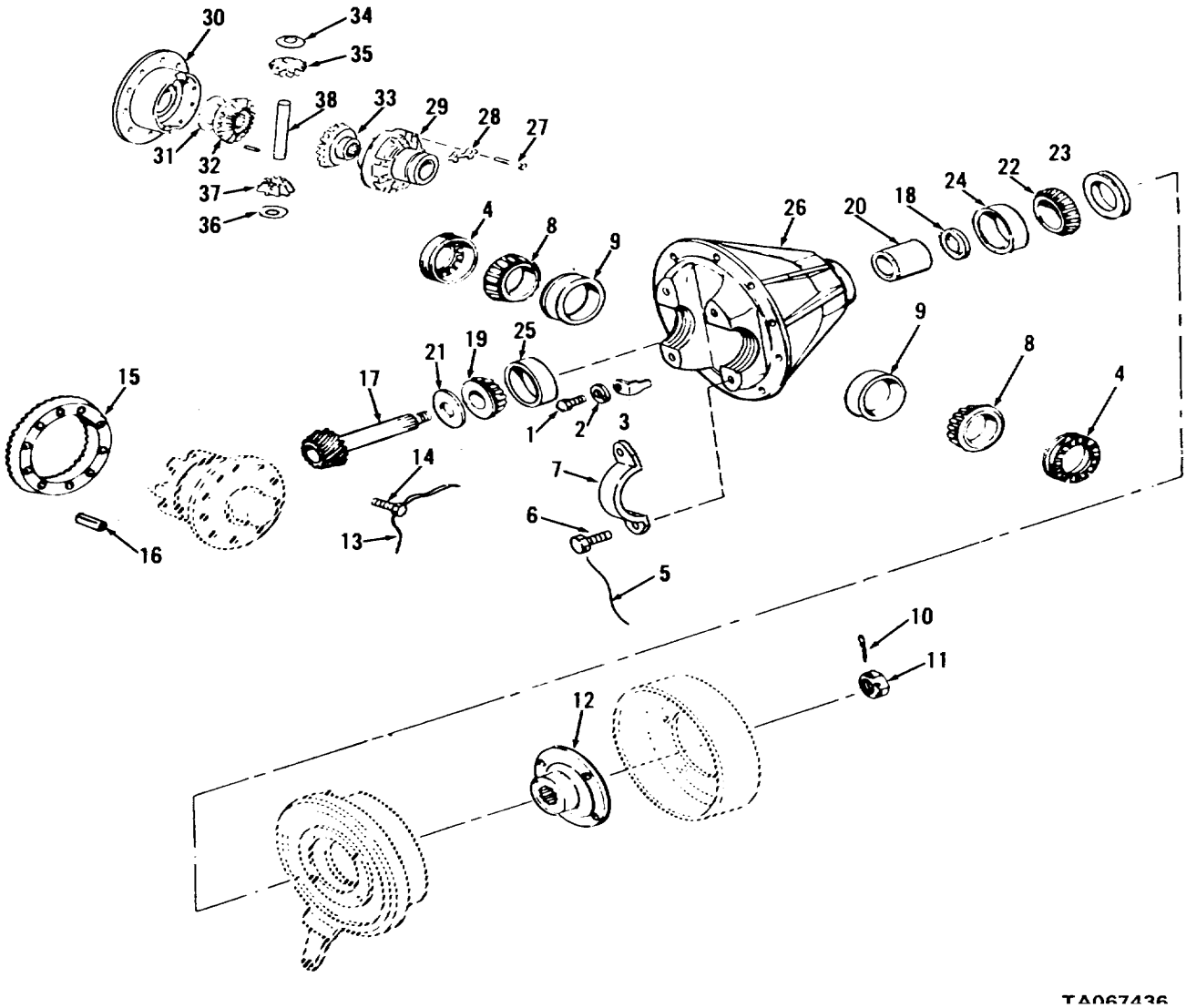

1	Screw	10	Cotter pin	19	Bearing cone	29	Case half
2	Lock washer	11	Nut	20	Spacer	30	Case half
3	Bearing lock	12	Pinion flange	21	Shim	31	Thrust washer
4	Adjusting nut	13	Lock wire	22	Bearing cone	32	Side gear
5	Lock wire	14	Screw	23	Seal	33	Side gear
6	Screw	15	Ring gear	24	Bearing cup	34	Thrust washer
7	Bearing cap	16	Dowel	25	Bearing cup	35	Spider gear
8	Bearing cone	17	Pinion	26	Carrier	36	Thrust washer
9	Bearing cup	18	Shim	27	Screw	37	Spider gear
				28	Lock plate	38	Spider

Figure 10-6. Differential, disassembly and reassembly.

c. Inspect pinion shaft and ring gear for damage and excessive wear. Replace if necessary.

NOTE

Pinion and ring gear may only be replaced as a set.

d. Replace all oil seals and gaskets at assembly.

10-16. Differential, Reassembly and Installation

a. Reassembly.

(1) Differential.

(a) Install thrust washer (31, fig. 10-6) in bottom of flanged case (30). Position side gear (32), spider (38), spider gears (35 and 27) and thrust washers (34 and 36) into flanged case (30).

(b) Assemble side gear (33) and washer (31) on spider and install plain case (29).

NOTE

Make sure case match marks (fig. 10-5) are aligned.

(c) Install lock plates (28) and screws (27). Tighten screws and bend lock plate tabs over screws.

(d) Install bearing cups (9) and cones (8), on differential assembly.

(2) Ring gear.

(a) Position two dowels (16, fig. 10-6) in ring gear and align ring gear with dowel holes in flanged case.

(b) Install screws (14) and draw ring gear in place. Tighten screws and lock with lock wires (13).

(3) Pinion gear.

(a) Press bearing cups (24 and 25, fig. 106) into differential carrier (26). Be certain they are firmly seated.

(b) Press front bearing cone (19) on pinion shaft (17) and position shaft in housing. Install rear bearing cone (22), pinion flange (12) and nut (11). Torque nut to 15 to 25 inch pounds (1.8 to 3.0 N' m) and spin gear to seat bearings.

(c) Place differential assembly in position in carrier housing, but do not install bearing caps.

(d) Measure distance between face of pinion gear and outside diameter of differential case (fig. 10-7) Check number etched on end of pinion gear.

Shim pack thickness can be determined as follows:

1. Number etched on pinion gear plus 0.171 inch (4.34 mm) equals proper dimension (example 0.004 on pinion gear equals 0.175 inch for proper dimension).

2. Subtract feeler gage dimension from this dimension (example 0.175 inch minus feeler gage thickness of 0.012 inch (0.304 mm) equals 0.163 inch (4.15 mm) thickness of shim pack).

(e) Assemble a compressed shim pack of shims (18 and 21, fig. 10-6) and measure with a micrometer to make up thickness of pack determined above.

(f) Remove differential assembly and pinion shaft from carrier.

(g) Remove front bearing cone (19) from pinion (17). Remove rear bearing cone (22).

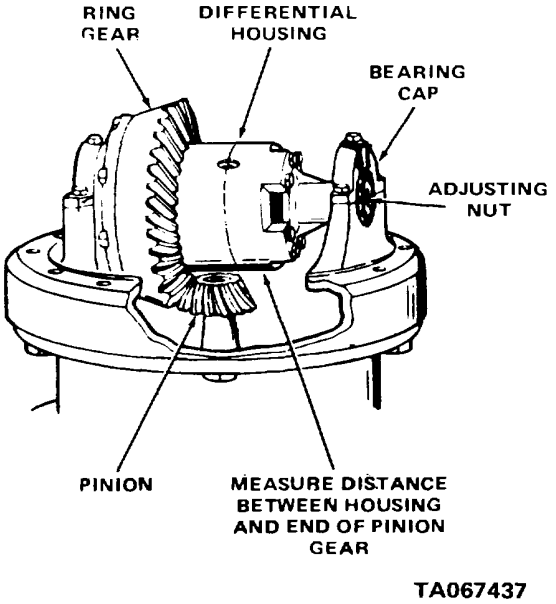

Figure 10-7. Measuring shim thickness.

(h) Install front shim pack (21) on shaft next to pinion gear, press on front bearing cone (19) and install assembly in carrier.

(i) Install new oil seal (23), rear bearing cone (22), rear shim pack (18) and spacer (20) on pinion shaft (17).

(j) Install pinion flange (12) on pinion and install nut (11).

(k) Torque slotted nut (11) to 15 to 25 inch pounds (1.8 to 3.0 N•m) and recheck dimensions (para (d) above). If dimension is correct, install cotter pin (10).

b. Installation.

(1) Position differential on carrier and engage ring gear (15, fig. 10-6) and pinion (17). Install bearing caps (7) and secure with screws (6). Do not tighten. Install adjusting nuts (4).

NOTE

Be certain bearing cups (9) and bearing caps (7) are installed in original position as marked during removal.

(2) Using a dial indicator and spanner tool on adjusting nut (4) as illustrated in figure 10-8, adjust ring gear laterally for a backlash of 0.005 to 0.010 inch (0.127 to 0.254 mm). To increase backlash, loosen adjusting nut nearest ring gear, and tighten the one opposite. To decrease backlash, reverse procedure.

(3) Coat entire ring gear with Prussian Blue or white lead.

(4) Rotate ring gear several times, holding back on pinion to create load effect.

(5) Inspect teeth of pinion and compare with

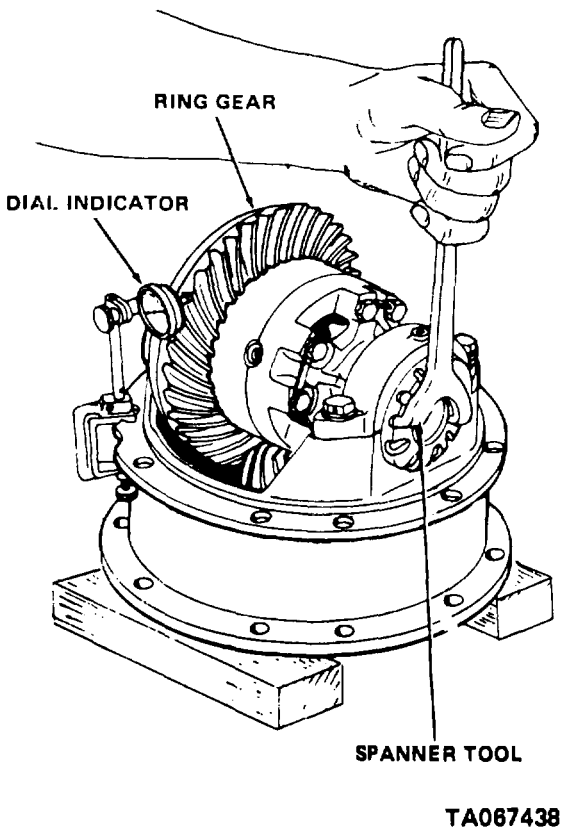

Figure 10-8. Adjusting differential backlash.

figure 10-9. Tooth contact must start at 0.031 to 0.062 inch (0.78 to 1.57 mm) from the top of the tooth and continue downward to an equivalent distance from the bottom of the tooth.

NOTE

Do not be concerned with the amount of paint removed. This will vary with load applied.

(6) Tighten screws (6, fig. 10-6) securing bearing caps (7) and lock with lock wire (5). Secure adjusting nuts with locks (3), lock washers (2) and screws (1).

(7) Position a new gasket on mounting flange of axle housing and coat with a leak proof adhesive.

(8) Align carrier housing stud holes with studs of axle housing and install carrier on axle housing. Secure with selflocking screws and nuts.

(9) Refer to TM 10-3930-630-12 and connect parking brake cable at brake drum lever and connect hydraulic lines.

(10) Refer to LO 10-3930-630-12 and replace drin plug and service the differential assembly.

(11) Refer to TM 10-3930-630-12 and install axle shafts and drive shaft.

(12) Refer to paragraph 7-4 and install drive wheels.

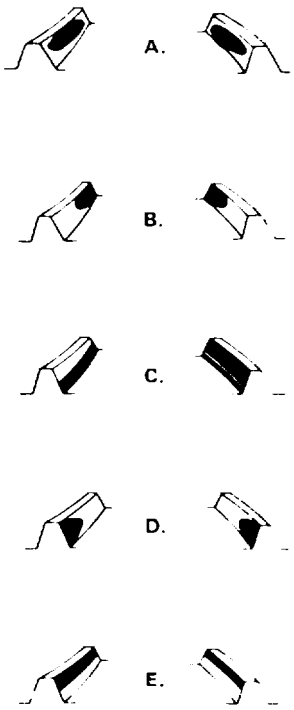

A CORRECT ADJUSTMENT.

B. HEAVY CONTACT ON TOE OF TOOTH. TO CORRECT, MOVE RING GEAR AWAY FROM PINION. MOVE PINION TOWARDS RING GEAR TO AGAIN SECURE CORRECT BACKLASH.

C. BEARING TOO LOW. HEAVY CONTACT ON FLANK OF TOOTH. TO CORRECT, MOVE PINION AWAY FROM RING GEAR UNTIL CONTACT COMES TO FULL WORKING DEPTH OF GEAR TOOTH WITHOUT BEARING CONTACT AT FLANK. MOVE RING GEAR TOWARDS PINION TO SECURE PROPER BACKLASH.

D. HEAVY CONTACT AT HEEL OF TOOTH. TO CORRECT, MOVE RING GEAR TOWARDS PINION. MOVE PINION AWAY FROM GEAR TO OBTAIN CORRECT BACKLASH.

E. SHOWS HEAVY CONTACT ON TOOTH FACE. MOVE PINION TOWARDS GEAR UNTIL CONTACT COVERS FLANK OF TOOTH WITHOUT BREAKING CONTACT AT FACE. MOVE GEAR AWAY FROM PINION TO SECURE CORRECT BACKLASH.

TA067439

Figure 10-9 Differential gear tooth patterns.

CHAPTER 11
ENGINE REPAIR INSTRUCTIONS

Section I. CYLINDER HEAD AND VALVES

11-1. Description

a. The cylinder head is an alloy cast iron unit secured to the engine block with special hardened studs and screws. The head seals the top end of the cylinders to form the combustion chambers, and has passages for the intake of the air-fuel mixture, and the expulsion of exhaust gases, as well as cored passages through which the coolant flows to prevent overheating.

b. The cylinder head as well as the valve tappet cover must be removed to gain access to the valves and valve springs. The end of each valve stem is fitted with a shallow steel retainer that surrounds the end of the valve spring, and is held to the stem by a pair of wedge keepers or locks.

11-2. Cylinder Compression Check

a. Refer to TM 10-3930-630-12 and remove spark plugs and check compression in each cylinder using a compression tester and gage. Crank engine to check compression.

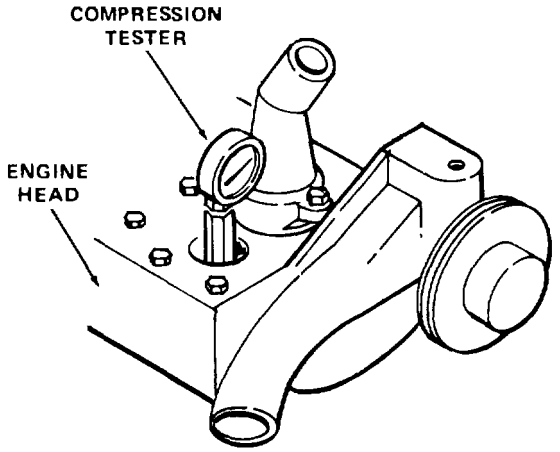

TA067440

Figure 11-1. Checking cylinder compression.

b. Note reading on each cylinder. Pressure of cylinders must be within 10 psi (0.703 kg/cm^2) of each other.

c. Note cylinders that vary from tolerance. These cylinders will have to be repaired.

d. If it is suspected that compression may be leaking past piston rings, inject small amount of heavy engine oil through spark plug hold to seal pistons and repeat test.

(1) To check piston blow-by, remove engine oil filler cap. Crank engine, and as the piston is slowly brought to compression listen at the oil filler tube. If piston is allowing air to leak past, it can be heard.

(2) Mark cylinder for piston repair.

11-3. Valve Mechanism, Removal and Disassembly

NOTE

The valve mechanism is disassembled in the removal procedure.

a. Refer to TM 10-3930-630-12 and remove the cylinder head.

b. Remove the valve locks, valve springs, retainers, valves and valve springs as illustrated in figure 11-2.

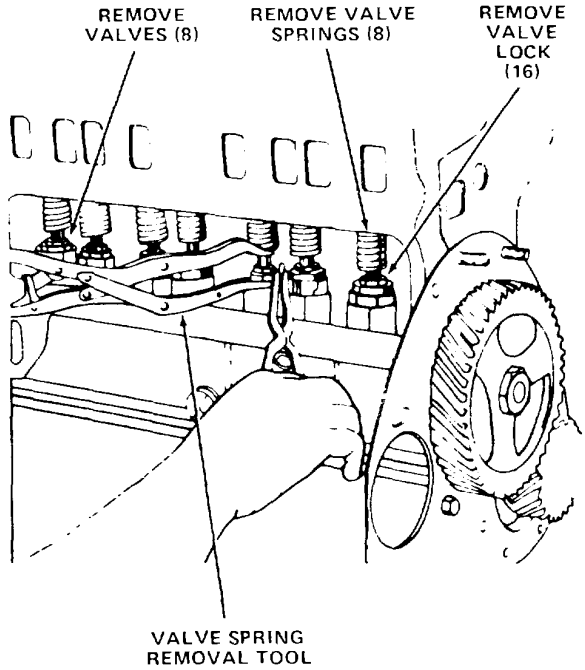

TA067441

Figure 11-2. Values, removed and installation .

c. After valves are removed, remove tappets (9), fig.11-2A.

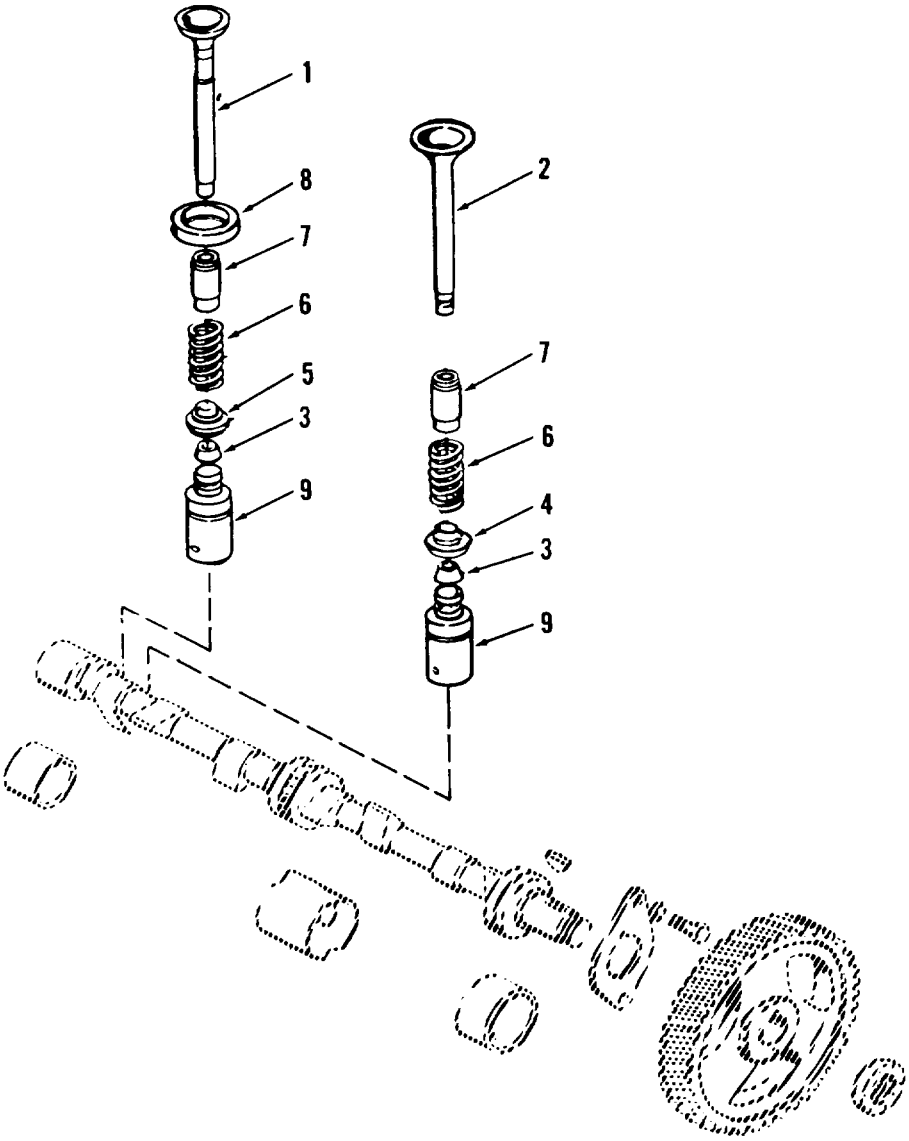

1 Exhaust valve
2 Intake valve
3 Valve lock
4 Spring retainer
5 Exhaust valve rotor
6 Valve spring
7 Valve guide
8 Valve seat insert
9 Valve tappet
10 Distributor drive shaft

TA067442

Figure 11-2A. Valve mechanism removal and installation.

NOTE

Valves must be installed in the same cylinders from which they were removed.

d. Remove valves guides as follows:

(1) Clean valve guides by removing lacquer and other deposits by running a wire brush soaked with cleaning solvent (Fed. Spec. PD680) through guide.

(2) Check inside diameter of valve guides.

(a) Inside diameter should be 0.3432 to 0.3422 inch (8.74 to 8.69 mm).

(b) Maximum diameter wear limit is 0.3447 inch (8.75 mm).

(c) Replace guides that do not meet the above tolerances as illustrated in figure 11-3.

e. Remove valve seat insert as illustrated in figure 114.

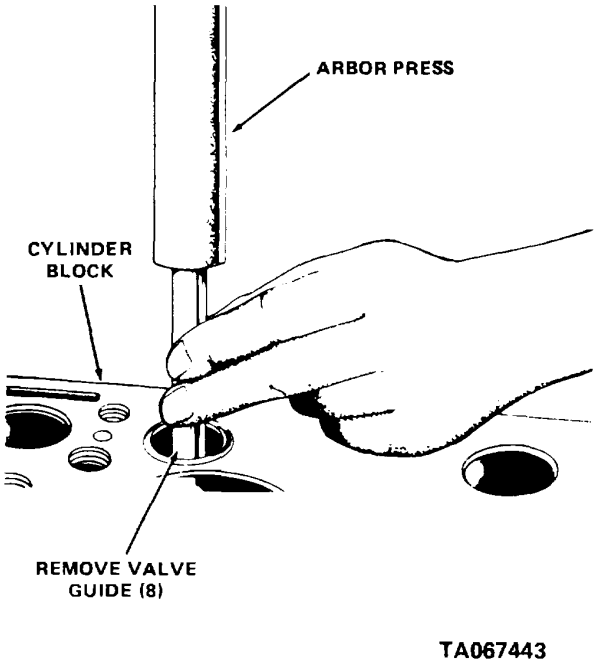

Figure 11-3. Valve guide removal.

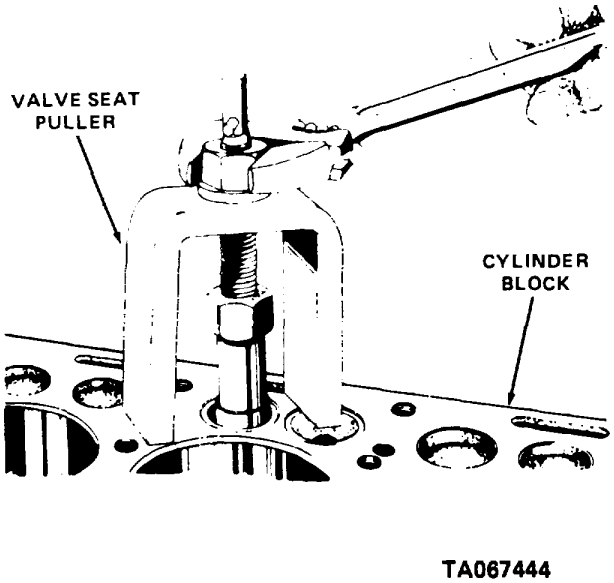

Figure 11-4. Valve seat removal.

11-4. Valve Mechanism, Cleaning, Inspection and Repair

a. Clean parts in cleaning solvent (Fed. Spec. P-D-680) and dry thoroughly.

b. Remove all carbon and burned oil from valves.

c. Check valves and seats for excessive burning, cracks and pitting.

d. Check valve guides by inserting valves and noting amount of side play.

e. Check intake valves as follows:

(1) Stem diameter must be 0.3414 to 0.3406 inch (8.67 to 8.65 mm).

(2) Minimum diameter wear limit is 0.3386 inch (8.60 mm).

(3) Stem clearance limits in valve guide must be 0.0026 to 0.0008 inch (0.066 to 0.020 mm).

(4) Maximum clearance is 0.0046 inch (0.116 mm).

(5) Desired clearance is 0.0015 inch (0.038 mm).

f. Check exhaust valves as follows:

(1) Stem diameter must be 0.3385 to 0.3377 inch (8.59 to 8.57 mm).

(2) Minimum diameter wear limit is 0.3357 inch (8.52 mm).

(3) Stem clearance limits in valve guide must be 0.0055 to 0.0037 inch (0.139 to 0.093 mm).

(4) Maximum clearance is 0.0075 inch (0.190 mm).

(5) Desired clearance is 0.0045 inch (0.114 mm).

g. Replace valves that do not comply with the above tolerances.

h. Inspect and repair valve seats as follows:

(1) Inspect valve seats for cracks and damage.

(2) Check all inserts for cracks and damage and for looseness in mounting.

(3) Measure outside diameter of exhaust valve insert.

(4) Clean and counterbore the block for a 0.010 inch (0.254 mm) large insert. When machining counterbore, go deep enough to provide full contact of the insert.

(5) Figure 11-5 shows standard insert and counterbore dimensions.

(6) Always use an oversize insert as a replacement.

(7) Insert must be a press fit. Place insert in a container of dry ice before installing. Use gloves to remove from ice and install insert to prevent freezing or burning hands from dry ice.

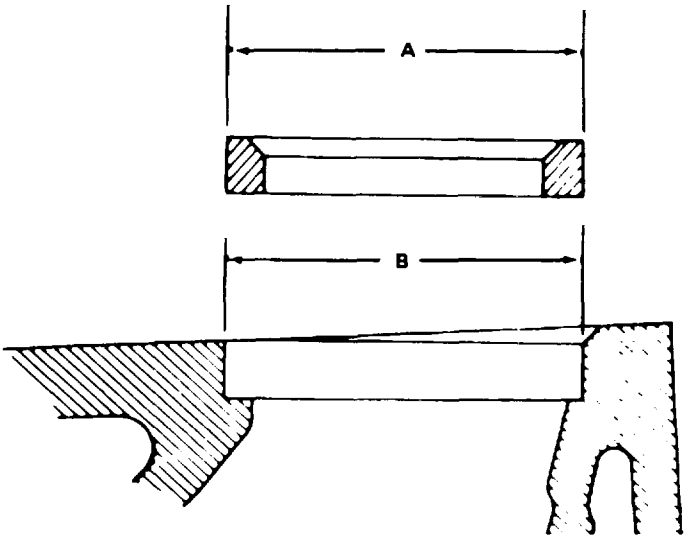

A. O.D. OF INSERT	1.3485-1.3475 INCH
B. I.D. OF COUNTEBORE	1 3445-1.3435 INCH
PRESS FIT	0.003-0.005 INCH

TA067445

Figure 11-5. Insert and counterbore dimensions.

(8) a piloted driver and press the insert in place as shown on figure 11-6.

i. Grind valves and valve seats as follows:

(1) Reface valves using a valve grinding tool. Intake valve angle is 30 degrees. Exhaust valve angle is 45 degrees.

(2) Refer to figure 11-7 for valve head thickness.

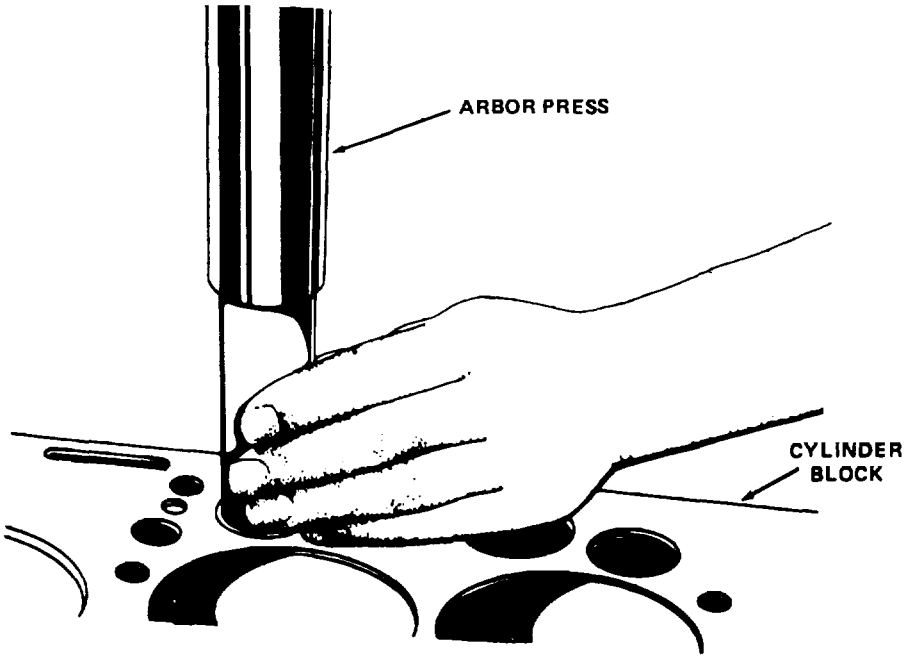

TA067446

Figure 11-6. Valve seat insert installation.

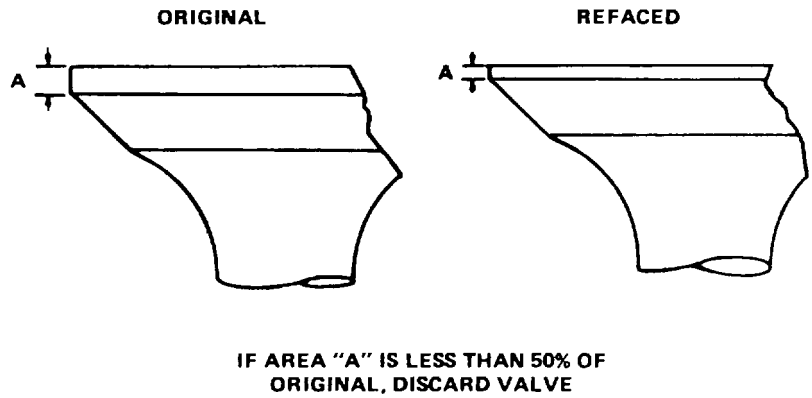

TA067447

Figure 11-7. Allowable head thickness of refaced valves.

(3) Check all refaced or new valves with an indicator as shown in figure 11-8. Place valve in "V" blocks as shown and rotate face against dial indicator. Valve face should be true with the stem within 0.002 inch (0.051 mm). If not, repeat valve grinding operation.

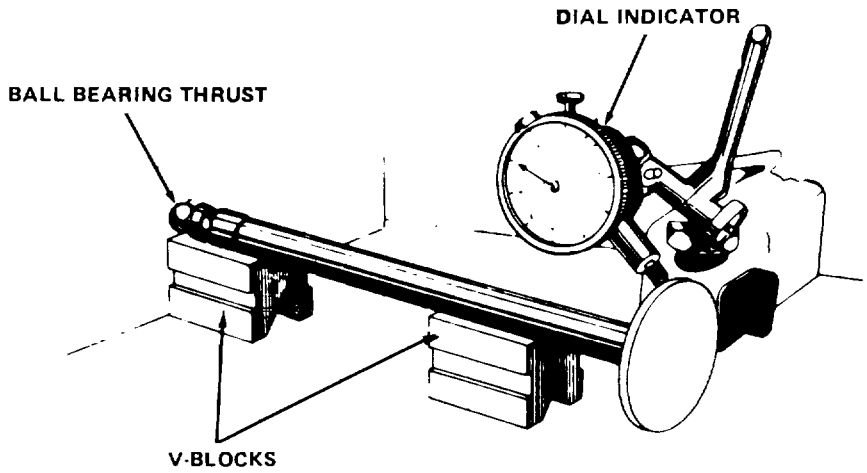

TA067448

Figure 11-8. Checking valve face.

(4) Lightly coat valve seat with Prussian blue. Place valve in position, and rotate valve slightly to transfer pattern to valve face. Pattern must show valve contact width of 0.0625 to 0.938 inch (1.58 to 23.8 mm) and must fall well within the width of the valve face. A margin of at least 0.0625 inch (1.58 mm) on either side must be bore of Prussian blue.

(5) If contact area is over 0.938 inch (23.8 mm) wide, seat must be narrowed by using a 15 degree stone to reduce the outside diameter. If less than 0.625 inch (1.58 mm), use a 60 to 75 degree stone to increase the inside diameter. Refer to figure 11-9.

(6) Check valve position in cylinder block and refer to figure 11-10 for correct seating.

(7) After valve seat is correct, retouch seat lightly to remove burs or feathered edge.

j. Inspect springs for cracks, and other damage. Replace cracked or damaged springs.

k. Check valve springs as follows:

(1) Outside diameter should be 0.9688 inch (24.6 mm).

(2) Check valve springs on a valve spring tester. The length of the spring with the valve closed, under 47 to 53 pounds (21.2 to 24.0 kg), should be 1.7031 inches (43.2 mm). Minimum weights to reach this should be 42 pounds (19.0 kg).

(3) Place a load of 96 to 104 pounds (43.4 to 47.1 kg) on spring to simulate a valve open. Length of spring should be 1.4219 inches (36.1 mm). Minimum allowable weight to achieve this is 86 pounds (38.9 kg).

l. Replace all springs that do not meet the above

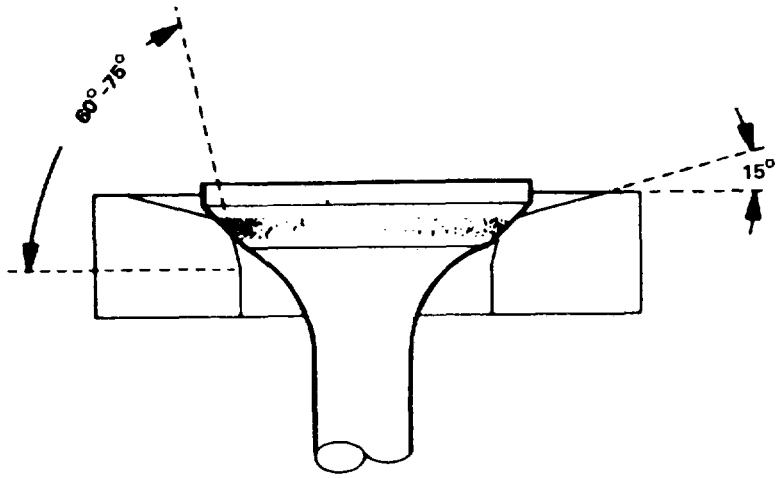

TA067449

Figure 11-9. Method of grinding valve seats.

tolerances.

m. Inspect tappets for wear and damage.

n. Check tappets as follows:

(1) Outside diameter of tappet should be 0.9995 to 0.9990 inch (25.38 to 25.37 mm).

(2) Maximum wear limit is 0.9985 inch (25.36 mm).

(3) Tappet bore in block should be 1.0000 inch (25.4 mm). Maximum wear limit is 1.0050 inch (25.52 mm)

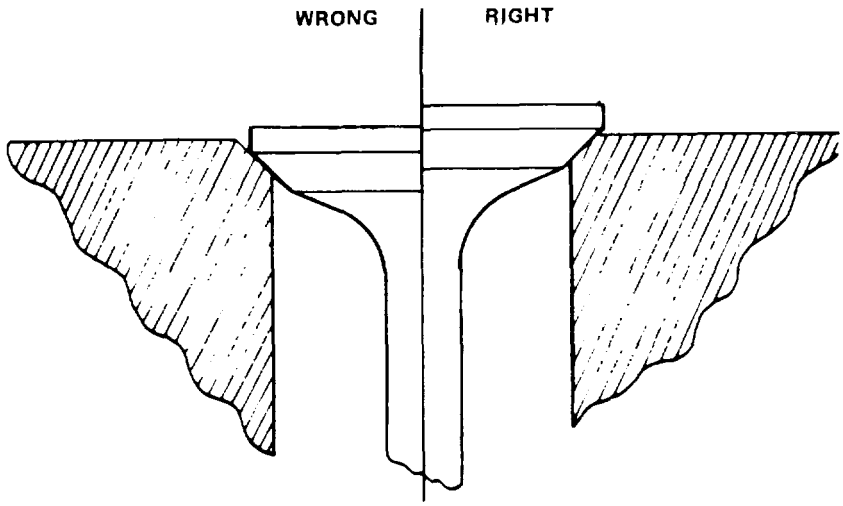

TA067450

Figure 11-10. Valve position in cylinder block.

11-5. Valve Mechanism, Reassembly and Installation

NOTE

The valve mechanism is reassembled during the installation procedure.

a. Check length of valve guide. Length should be 2.3125 inch (58.7 mm)

b. Check outside diameter. Outside diameter should be 0.6675 to 0.6565 inch (16.9 to 16.6 mm).

c. Use a suitable pressing tool and install valve guides by pressing into block. Press guides in from combustion side.

d. Press valve guides into place to the distances shown on figure 11-11. Both valve guides should be 1.4062 inch (35.71 mm) from face of block.

e. Check inside diameter of valve guides after installation and ream to inside diameter of 0.3432 to 0.3422 (8.74 to 8.69 mm) if necessary. Clean guides and block thoroughly after reaming.

f. Install valve tappets (9, fig. 11-2A) in cylinder

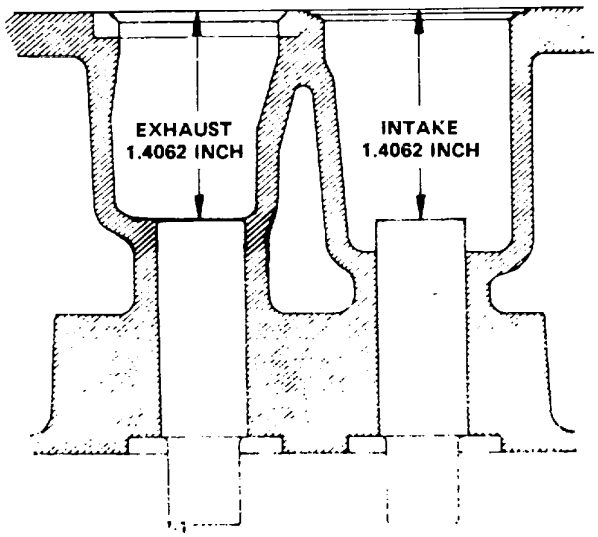

TA067451

Figure 11-11. Valve guide installation.

block. Install tappets in same bore from which they were removed.

g. Install valve and valve spring in position in correct cylinder. Install rotor (5) in exhaust valve bore. Install spring retainer (4) in intake valve bore.

h. Use a valve removal tool and compress spring. Insert locks to secure valves in position.

i. Refer to TM 10-3930-630-12 to adjust valve clearances and install cylinder head and valve cover.

Section II. OIL PAN, OIL PUMP AND PRESSURE RELIEF VALVE

11-6. Description

a. The oil pump is a positive gear type pump. A gear on the upper end of the pump body is driven by a gear on the camshaft. The pump shaft is carried in two bronze bearings mounted in the pump housing.

b. Pressure is regulated by a pressure regulating valve mounted in the engine block.

11-7. Oil Pan, Removal and Disassembly

a. Refer to TM 10-3930-630-12 and drain oil pan.

b. Remove and disassemble the oil pan in numerical sequence as illustrated in figure 11-12.

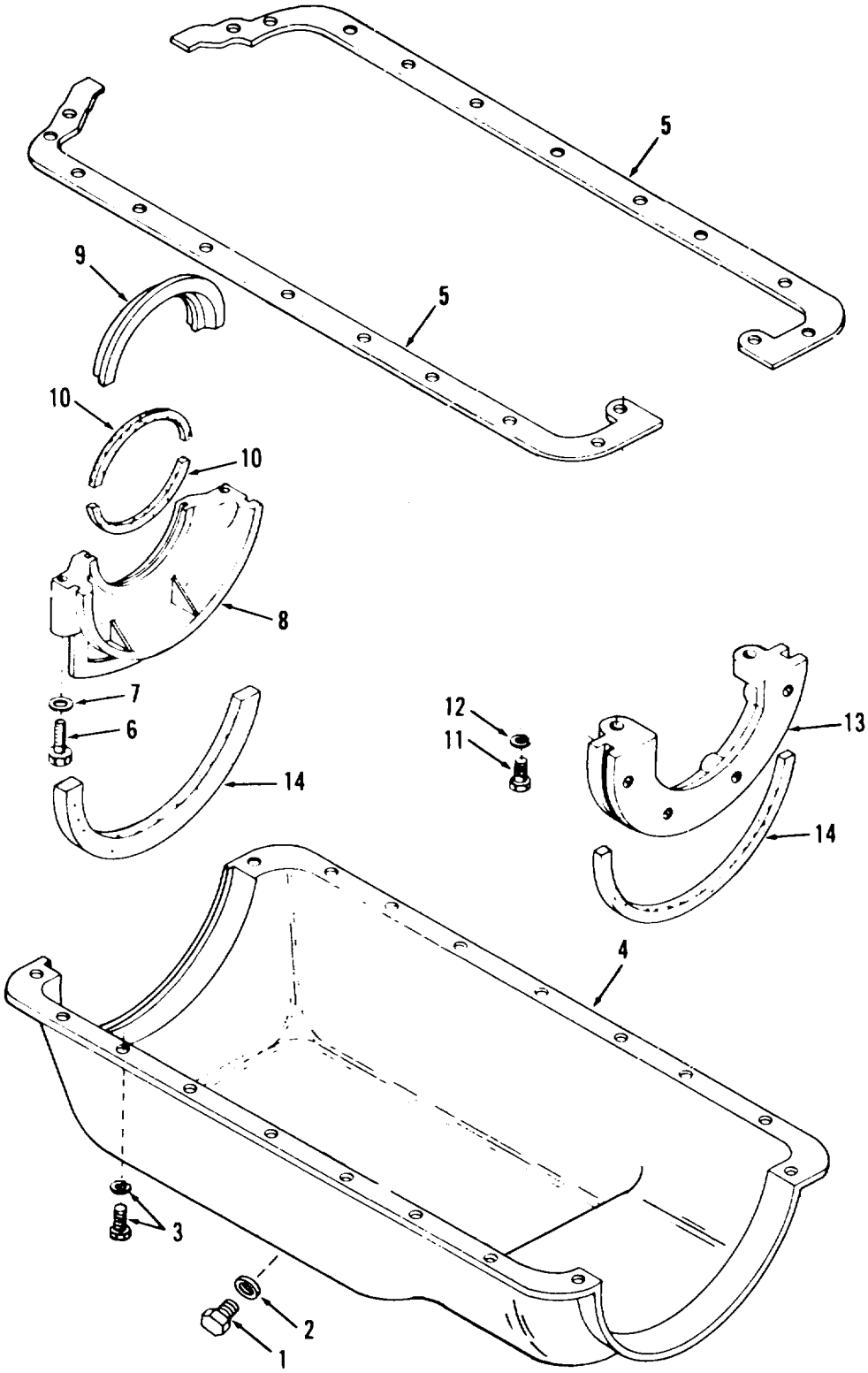

1 Plug
2 Gasket
3 Screw and washer
4 Oil pan
5 Gasket
6 Screw
7 Lock washer
8 Filler block
9 Guard
10 Oil seal
11 Screw
12 Lock washer
13 Filler block
14 Gasket

TA067452

Figure 11-12. Oil pan and filler blocks, removal and installation.

11-8. Oil Pan Cleaning, Inspection and Repair

a. Clean pan thoroughly with cleaning compound, solvent (Fed. Spec. P-D-680) and dry.

b. Inspect pan (4, fig. 11-12) for cracks and other damage. Check gasket surface and clean thoroughly.

c. Inspect filler blocks and seals for deterioration and damage.

d. Replace unserviceable parts.

11-9. Oil Pan, Reassembly and Installation

a. Reassemble and install the oil pan assembly in reverse numerical sequence as illustrated in figure 11-12.

b. Refer to LO 10-3930-630-12 and fill engine with correct oil.

11-10. Oil Pump, Removal and Disassembly

a. Refer to paragraph 11-7 and remove oil pan.

b. Remove and disassemble the oil pump assembly in numerical sequence as illustrated in figure 11-13.

11-11. Oil Pump Cleaning, Inspection and Repair

a. Clean all metal parts in cleaning compound, solvent (Fed. Spec. P-D-680) and dry thoroughly.

b. Inspect drive gear for wear and damage.

c. Check screen for clogging and damage.

d. Inspect cover for wear and damage. Refinish cover surface, if necessary.

e. Check driven and idler gears for wear and scoring.

f. Inspect bores in housing for wear and scoring.

g. Replace unserviceable parts.

11-12. Oil Pump, Reassembly and Installation

a. Reassembly.

(1) Install key (14, fig. 11-13) on shaft (13) and press driven gear (15) on shaft. Secure gear with retaining ring (12).

(2) Install shaft (13) through housing (18). Press drive gear (11) on shaft and drive pin (9) through shaft (13) and gear (11).

(3) Install idler gear (16) in housing.

(4) Check gear clearance in body as shown on figure 11-14, using a feeler gage. Gears must have a clearance of 0.001 to 0.003 inch (0.025 to 0.096 mm) in the housing and must have no contact with the walls.

(5) Install gasket (8) on housing and check gear end clearance with a feeler gage as shown on figure 11-15. The clearance must be 0.0015 to 0.006 inch (0.038 to 0.152 mm).

(6) Install cover (7), gasket (6) and frame (5). Secure frame with screws (4) Install screen (3) in frame.

b. Installation.

(1) Install coupling (10) and install pump in engine. Make sure drive gear (11) meshes with gear on camshaft.

(2) Secure pump with nut (1) and lock washer (2).

(3) Refer to paragraph 11-9 and install oil pan.

(4) Refer to LO 10-3930-630-12, and fill engine with oil and operate engine to check oil pressure. Adjust oil pressure (para 11-15) if necessary.

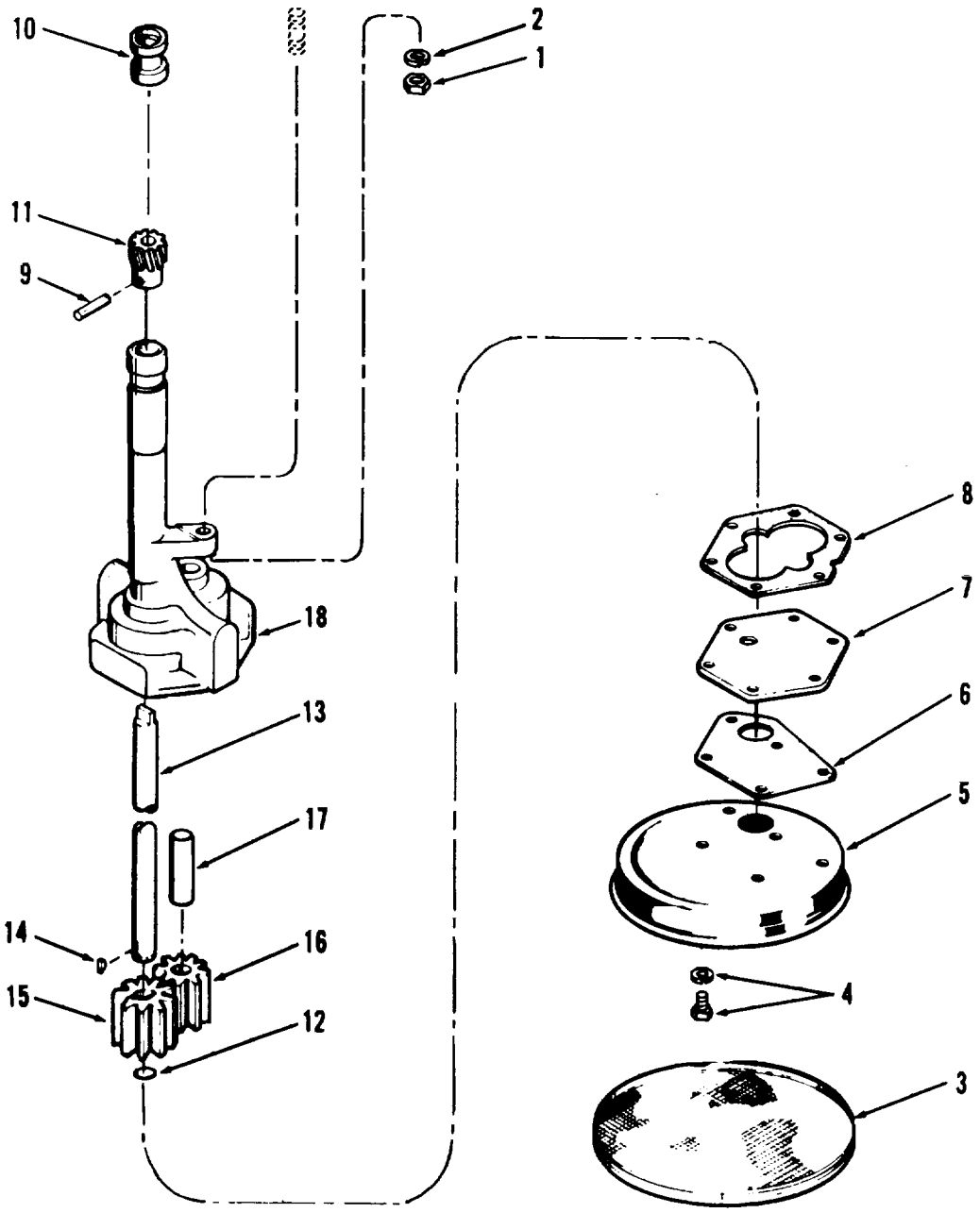

TA067453

1	Nut	10	Coupling
2	Lock washer	11	Drive gear
3	Screen	12	Retaining ring
4	Screw	13	Driven gear shaft
5	Frame	14	Key
6	Gasket	15	Driven gear
7	Cover	16	Idler gear
8	Gasket	17	Idler gear stud
9	Pin	18	Pump housing

Figure 11-13. Oil pump, removal and installation.

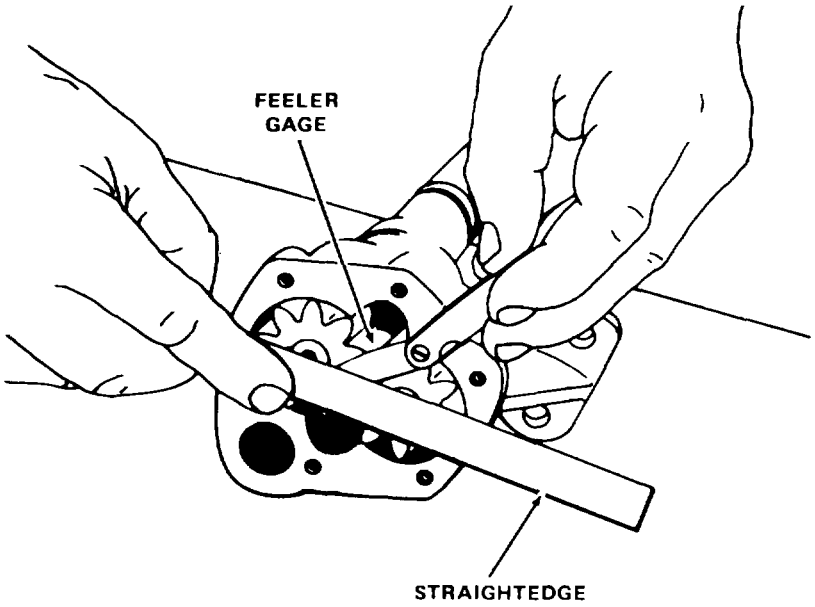

TA067454

Figure 11-14. Checking oil pump gear clearance.

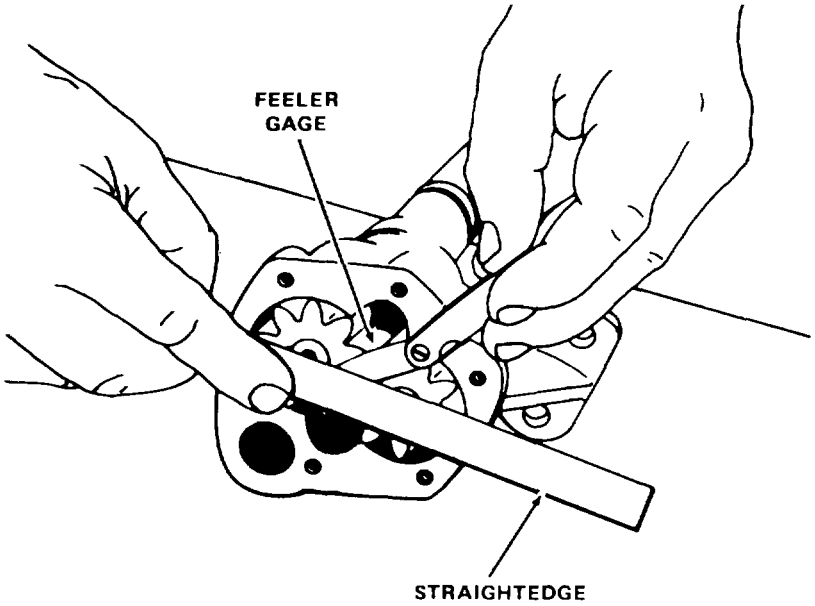

TA067455

Figure 11-15. Checking oil pump gear end clearance.

11-13. Oil Pressure Relief Valve, Removal and Disassembly

Remove and disassemble the oil pressure relief valve in numerical sequence as illustrated in figure 11-16.

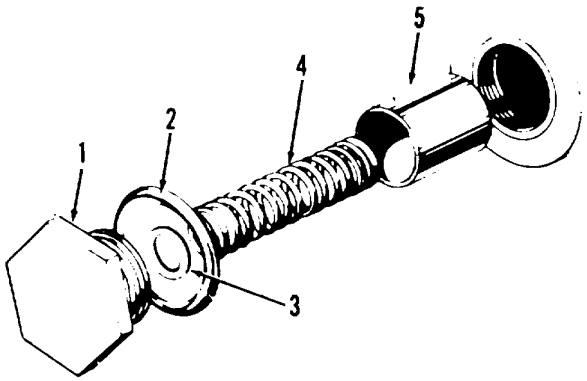

TA067456

1 Plug
2 Gasket
3 Washer
4 Spring
5 Valve

Figure 11-16. Oil pressure relief valve, disassembly and reassembly.

11-14. Oil Pressure Relief Valve, Cleaning, Inspection and Repair

a. Clean all metal parts in cleaning compound, solvent (Fed. Spec. P-D-680) and dry thoroughly.

b. Inspect valve for dents, wear and damage.

c. Inspect spring for cracks, damage and signs of weakness.

d. Replace unserviceable parts.

11-15. Oil Pressure Relief Valve, Reassembly and Installation

a. Reassembly and Installation. Reassemble and install the oil pressure relief valve in reverse numerical sequence as illustrated in figure 11-16.

b. Adjustment. Adjustment of the oil pressure relief valve is accomplished by the removal and installation of washers (3, fig. 11-16) behind spring (4).

(1) With engine at operating temperature, the recommended pressure at idle speed is 5 to 10 psi (0.35 to 0.70 kg/cm2).

(2) With engine at operating temperature the recommended pressure at full throttle is 30 to 40 psi (2.1 to 2.8 kg/cm2).

(3) To increase pressure, add washers (3). Add washers, one at a time, and check pressure. If after installing four washers, pressure is still low, replace spring (4).

(4) To decrease pressure, remove washers. Remove washers, one at a time, and check pressure. If all washers are removed and pressure is still high, replace spring.

Section III. PISTONS AND CONNECTING RODS

11-16. Description

a. The connecting rods are precision ground and rifle drilled. They receive the thin-wall precision type bearing shells to mount to the crankshaft.

b. The aluminum pistons have four rings, two compression rings, one scraper ring and one three piece oil control ring.

11-17. Piston and Connecting Rods, Removal and Disassembly

a. Removal.

(1) Refer to paragraph 2-22 and remove the engine from the truck.

(2) Refer to paragraph 11-7 and remove the oil pan.

(3) Refer to TM 10-3930-630-12 and remove the cylinder head.

(4) Use a ridge cutting tool and remove ridge at top of piston bores.

(5) Refer to figure 11-17 and remove rod bearing cap nuts and connecting rod bearing caps and bearing shells.

(6) Slide piston and connecting rod up out the top of the engine crank case.

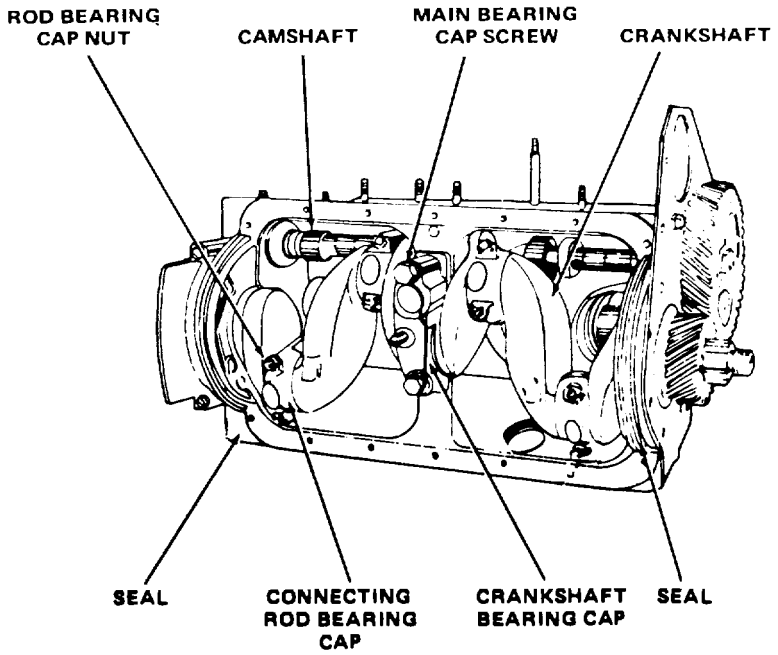

TA067457

Figure 11-17. Piston and connecting rod, removal, and installation.

b. Disassembly.

(1) Disassemble the piston and connecting rod in numerical sequence as illustrated in figure 11-18.

(2) Rod bolt (8), nut (7), bearing cap (9) and bearing shells (10) were removed when connecting rod was removed from crankshaft.

11-18. Piston and Connecting Rod, Cleaning, Inspection and Repair

a. Clean parts in cleaning solvent (Fed. Spec. P-D-680).

b. Inspect rings for worn or broken condition.

c. Check for carbon deposits on piston walls and in ring grooves. Clean carbon.

d. Inspect inside of piston for cracks and other damage. Check drilled holes in piston walls and clean if necessary.

e. Check piston as follows:

(1) Attach a one-half inch (12.7 mm) long strip of feeler stock (fig. 11-19) 0.003 inch (0.076 mm) thick to a spring scale of approximately 15 pounds capacity (fig. 11-19).

(2) Insert piston and feeler stock in cylinder bore. Withdraw the feeler stock and check pull on spring scale. Pull must be 5 to 10 pounds (2.77 to 4.53 kg). If pull is less, replace piston.

(3) Measure piston skirt diameter. Diameter must be 3.4120 to 3.4170 inches (86.6 to 86.7 mm).

(4) Check ring groove widths as illustrated in figure 11-20.

(a) Top ring groove must measure 0.081 to 0.080 inch (2.05 to 2.03 mm). Maximum wear limit is 0.083 inch (2.10 mm).

(b) Second and third ring groove must measure 0.0965 to 0.0955 inch (2.45 to 2.42 mm). Maximum wear limit is 0.0985 inch (2.50 mm).

(c) Fourth ring groove width must measure 0.189 to 0.188 inch (4.80 to 4.77 mm). Maximum wear limit is 0.191 inch (4.85 mm).

f. Check piston rings as follows:

(1) Measure top piston ring width. Width must be 0.078 to 0.077 inch (1.98 to 1.95 mm). Minimum wear limit width is 0.075 inch (1.90 mm).

(2) Measure second and third ring widths. Width must be 0.094 to 0.093 inch (2.38 to 2.36 mm). Minimum wear limit width is 0.091 inch (2.29 mm).

(3) Measure fourth ring width. Width must be 0.188 to 0.184 inch (4.77 to 4.68 mm). Minimum wear limit width is 0.182 inch (4.63 mm).

(4) Check ring-to-land clearance (fig. 11-20) using a feeler gage.

(a) Top ring clearance must not exceed 0.008 inch (0.203 mm).

(b) Second and third ring clearance must not exceed 0.006 inch (0.152 mm).

(c) Fourth ring clearance must not exceed 0.009 inch (0.228 mm).

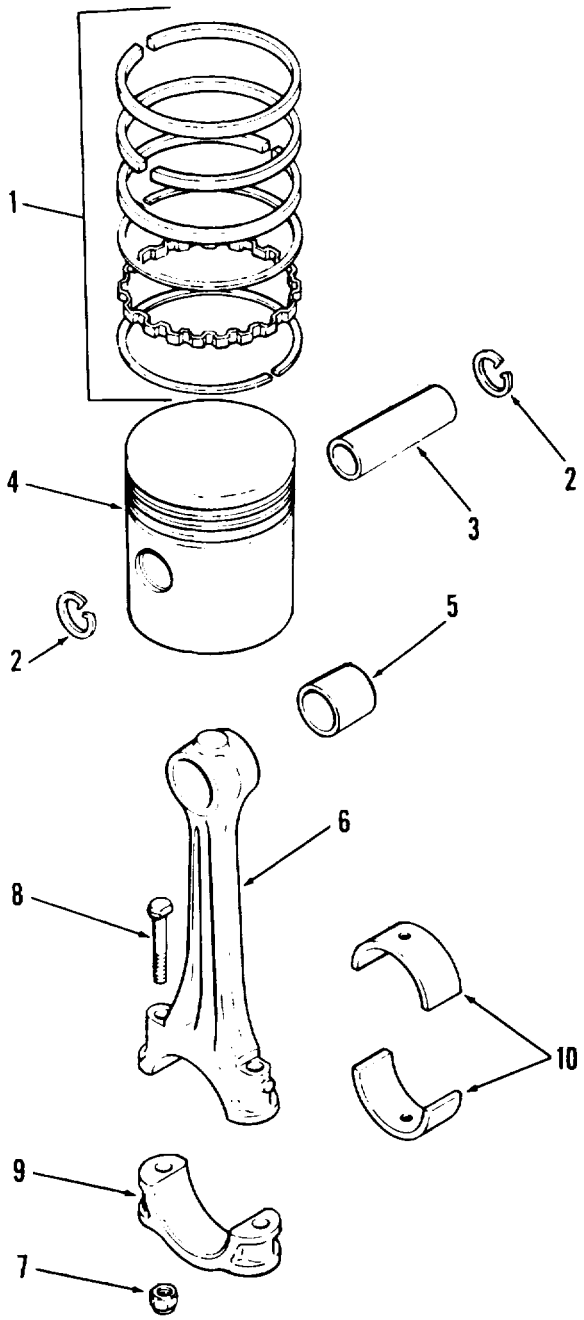

TA067458

1. Piston rings
2. Retaining ring
3. Piston pin
4. Piston
5. Rod bearing
6. Connecting rod
7. Nut
8. Rod bolt
9. Bearing cap
10. Bearing shell

Figure 11-18. Piston and connecting rod, disassembly and reassembly.

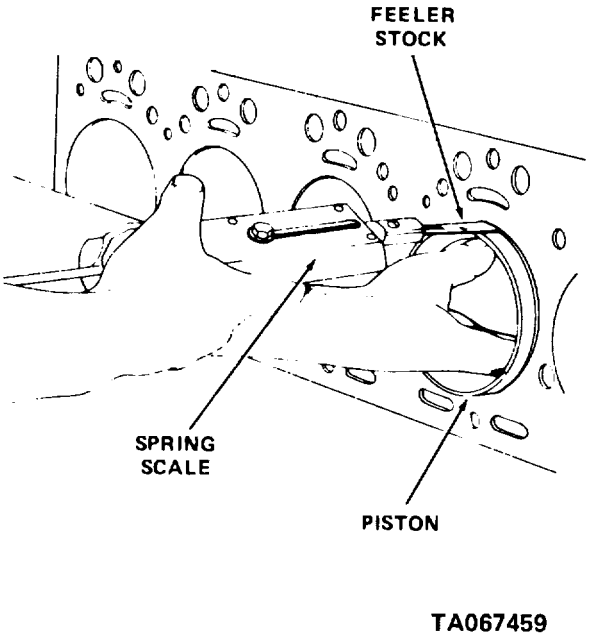

TA067459

Figure 11-19. Checking piston fit in bore.

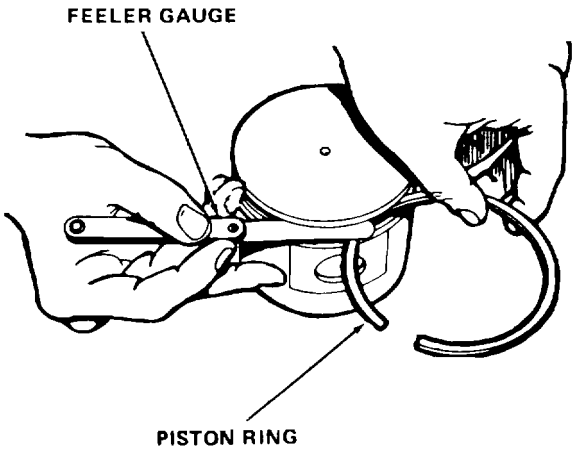

TA067460

Figure 11-20. Checking ring-to-land clearance.

(5) Check piston ring gap as follows:

(a) Insert piston in cylinder bore in an inverted position, and install each ring, one at a time, about two inches (50.8 mm) into bore. Bring bottom edge of the piston groove up against the ring to square it up and measure gap with a feeler gage as shown in figure 11-21.

(b) Top piston ring and second and third ring gap must be 0.008 to 0.018 inch (0.202 to 0.457 mm).

(c) Fourth ring gap must be 0.015 to 0.055 inch (0.038 to 1.39 mm).

g. Check piston pin as follows:

(1) Measure outside diameter of piston pin.

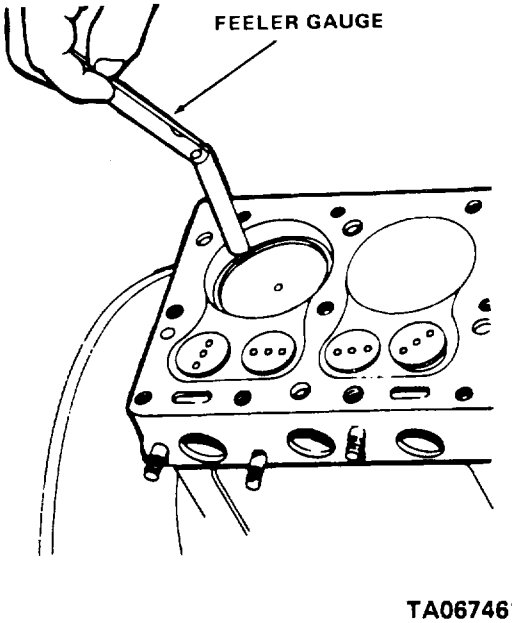

TA067461

Figure 11-21. Checking piston ring gap.

Diameter must be 0.8593 to 0.8591 inch (21.86 to 21.82 mm).

(2) Measure length of piston pin. Length must be 2.691 to 2.676 inches (68.3 to 67.9 mm).

(3) Measure inside diameter of piston pin hole in bearing. Diameter must be 0.8597 to 0.8595 inch (21.836 to 21.831 mm). Maximum wear limits diameter is 0.8607 inch (21.86 mm).

(4) Check fit of piston pin in piston. Pin must slide in with a light push at room temperature.

(5) Check piston pin fit in bearing. Clearance must be 0.0006 to 0.0002 inch (0.015 to 0.0005 mm). Desired fit is 0.0004 inch (0.010 mm).

h. Check connecting rods as illustrated in figure 8-1 19.

(1) Check bearing shells with a micrometer. Thickness must be 0.0616 to 0.0613 inch (1.56 to 1.55 mm). Minimum thickness wear limit is 0.608 inch (1.54 mm).

(2) Check piston pin bearing hole diameter. Diameter must be 0.914 to 0.913 inch (23.21 to 23.19 mm).

(3) Press bearing (5, fig. 11-18) into connecting rod (6).

(4) Install bearing shells (10) and bearing cap (9) on connecting rod. Secure with bolts (8) and nuts (7). Tighten bolts to a torque of 40 to 45 foot pounds (54:2 to 67.7 N•m).

(5) Install piston pin (3) in bearing. Place assembled connecting rod in fixture (fig. 11-22). Check rod for twisted or bent condition. Piston pin hole must be parallel to and in the same plane with large bore in bearing end.

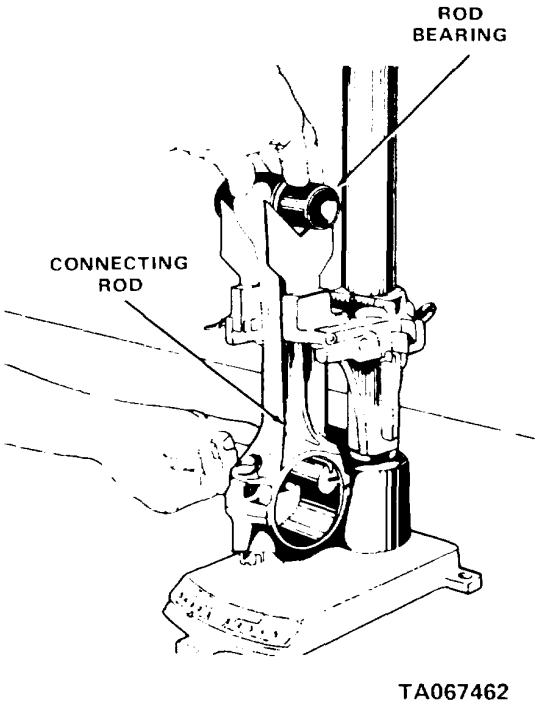

Figure 11-22. Checking connecting rod alignment.

(6) Straighten rod if possible. Replace excessively bent or twisted rods.

(7) Remove piston pin front connecting rod. Heat piston in oven to a minimum temperature of 160° F (71° C). Install one retaining ring (2, fig. 11-18) in piston. Install piston (4) on connecting rod (6) and slide piston pin (3) through piston and rod.
Secure pin with two remaining retaining rings (8).

(8) Place assembled piston and rod in fixture as shown in figure 11-23. Check alignment. Piston and rod must not be more than 0.002 inch (0.05 mm) out of square checked over a spread of four inches.

(9) Remove cap nuts (7, fig. 11-18), cap bolts (8), bearing caps (9) and bearing shells (10) from connecting rod.

11-19. Piston and Connecting Rod, Reassembly and Installation

a. Reassembly. (See table 1-1)

(1) Use a piston ring installer and install piston rings (1, fig. 11-18) in correct grooves on piston.

(2) Check to see that piston is securely attached to connecting rod and that both retaining rings (2) are installed.

b. Installation.

(1) Coat piston and rings with oil (OE/HDO).

(2) Use a piston ring compressor and install assembled piston and rod into proper cylinder through top of cylinder bore.

(3) Install connecting rod bearing shells (10, fig. 11-18) on crankshaft (fig. 11-17).

(4) Install a piece of feeler stock (fig. 11-24) 0.0005 inch (0.012 mm) thick across connecting rod bearing shell.

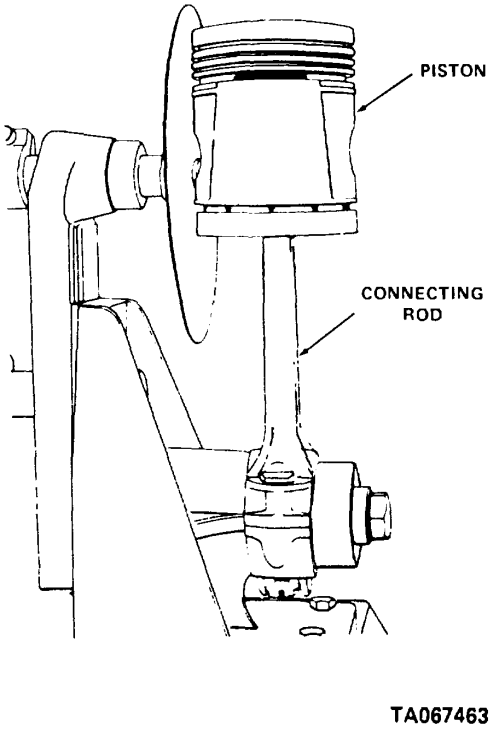

Figure 11-23. Checking connecting rod and piston.

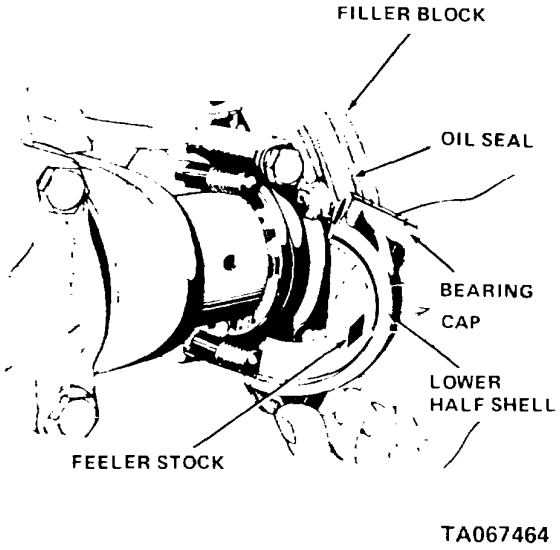

Figure 11-24. Checking connecting rod bearing clearance with feeler gage stock.

(5) Install connecting rod bearing cap and evenly tighten nuts to a torque of 40 to 45 foot pounds (54.2 to 61.0 N•m).

(6) Try to move the connecting rod from side to side. A well fitting bearing should be just loose enough to be snapped from side to side. This condition shows the bearings and crankpins are satisfactory.

(7) Remove connecting rod bearing cap and remove feeler stock. Repeat operation for each connecting rod bearing, one at a time.

(8) Replace bearings if they do not meet specifications stated above.

(9) Refer to TM 10-3930-630-12 and install cylinder head.

(10) Refer to paragraph 11-7 and install the oil pan.

(11) Refer to paragraph 2-24 and install the engine in the truck.

Section IV. TIMING GEARS AND CAMSHAFT

11-20. Description

The gear train consists of the crankshaft gear, the camshaft gear and fan drive gear. The crankshaft gear drives the camshaft gear, which in turn drives the fan drive gear.

11-21. Gear Cover and Fan Drive, Removal and Disassembly

a. Removal.

(1) Refer to TM 10-3930-630-12 and remove radiator belts and fan.

(2) Refer' to paragraph 2-12 and remove the hydraulic pump.

(3) The gear cover and fan drive is removed in the disassembly procedure.

b. Disassembly. Disassemble the gear cover and fan drive in numerical sequence as illustrated in figure 11-25.

11-22. Gear Cover and Fan Drive, Cleaning, Inspection and Repair

a. Clean all metal parts in cleaning compound, solvent (Fed. Spec. P-D-680) and dry thoroughly.

b. Inspect all gears for wear, broken teeth and other damage.

c. Inspect fan drive adapter shaft for wear, damage, and bearing for good condition.

d. Inspect gear cover for cracks and damage.

e. Replace unserviceable parts.

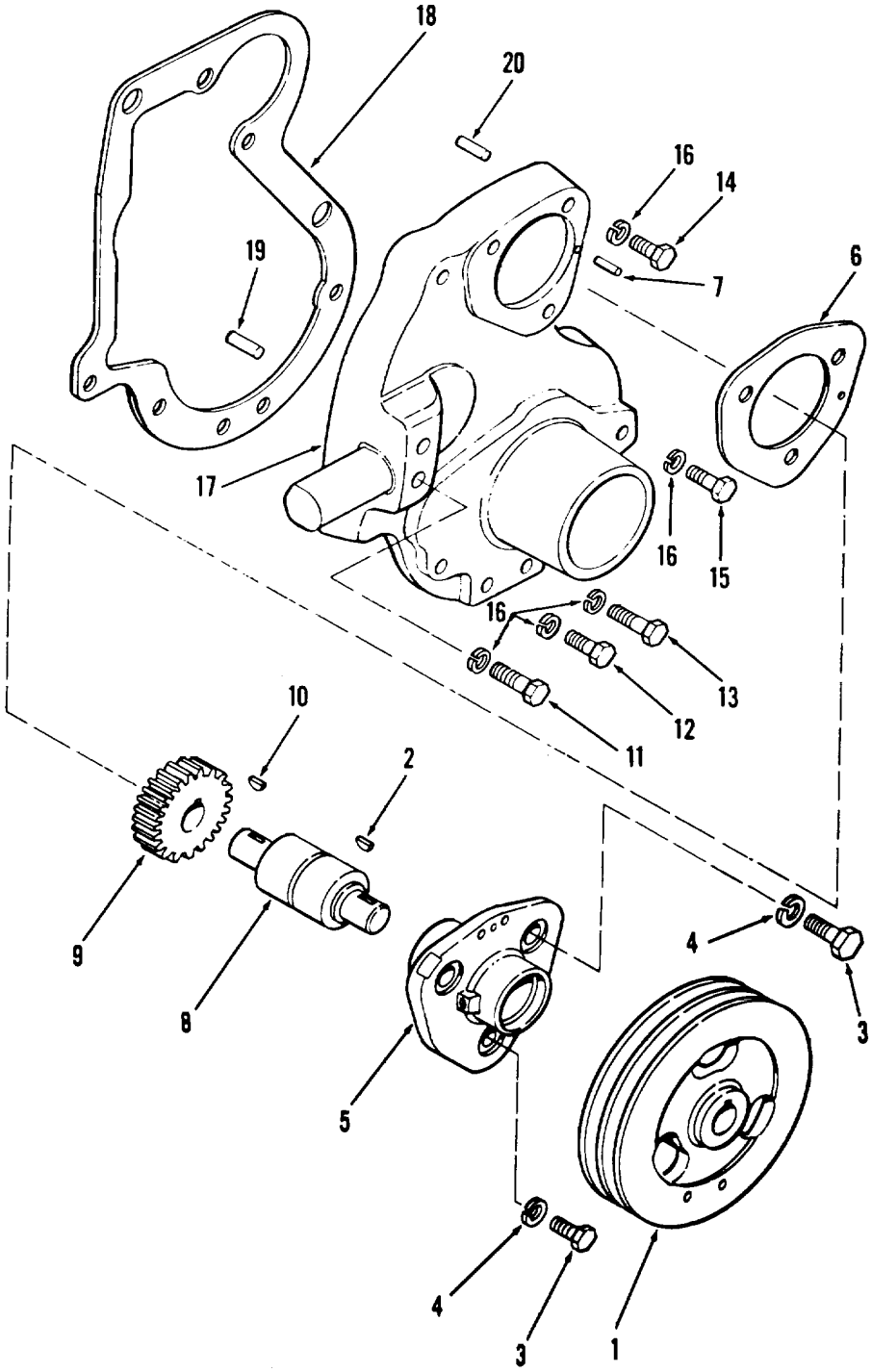

TA067465

1. Fan drive pulley	6. Gasket	11. Screw	16. Lock washer
2. Key	7. Pin	12. Screw	17. Gear cover
3. Screw	8. Shaft	13. Screw	18. Gasket
4. Lock washer	9. Fan drive gear	14. Screw	19. Pin
5. Adapter	10. Key	15. Screw	20. Pin

Figure 11-25. Gear cover and fan drive, disassembly and reassembly

11-23. Gear Cover and Fan Drive, Reassembly and Installation

a. Reassembly. Reassemble the gear cover and fan drive in reverse order of numerical sequence as illustrated in figure 11-25.

NOTE

Make sure the marked teeth on the camshaft gear straddle the marked tooth on the crankshaft gear (fig. 11-26).

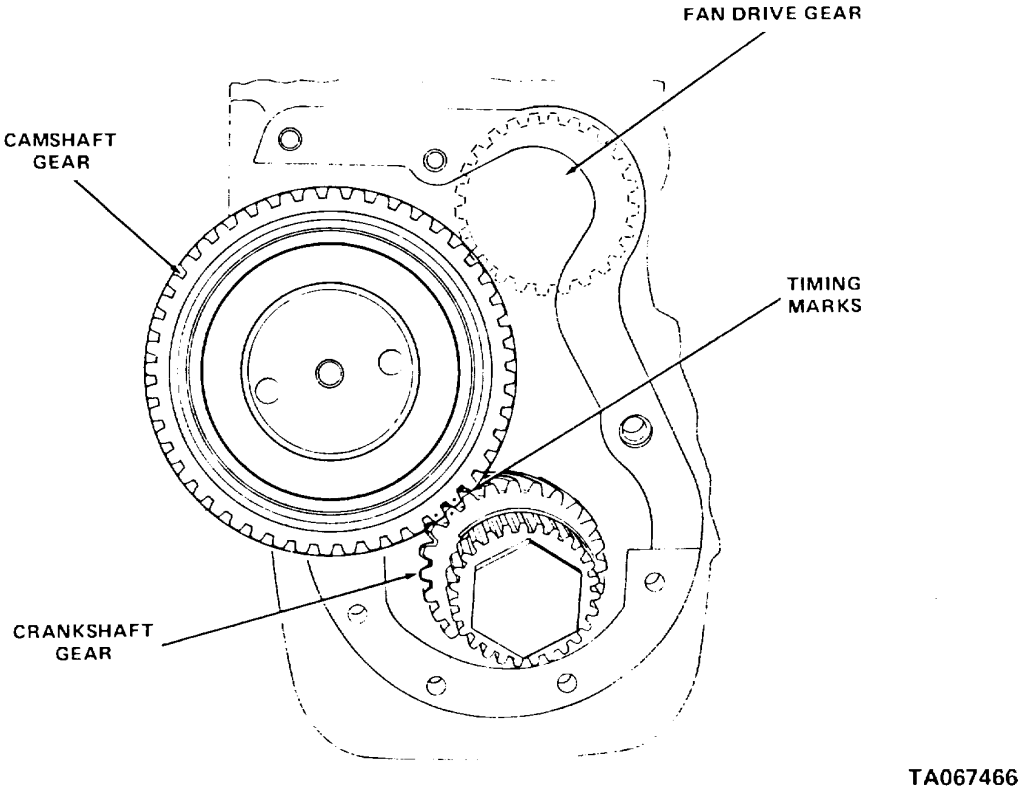

Figure 11-26. Gear train and timing works.

b. Installation.

(1) The gear cover and fan drive is installed during the reassembly procedure.

(2) Refer to paragraph 2-14 and install the hydraulic pump.

(3) Refer to TM 10-3930-630-12 and install belts, fan and radiator on engine.

11-24. Camshaft, Removal and Disassembly

a. Removal.

(1) Correct timing is critical to proper engine operation. It is accomplished by meshing the camshaft drive gear with crankshaft gear timing marks as shown in figure 11-26.

(2) Refer to paragraph 11-21 and remove the gear cover and fan drive.

(3) The camshaft is removed in the disassembly procedure.

b. Disassembly. Disassemble the camshaft in numerical sequence as illustrated in figure 11-27.

11-25. Camshaft, Cleaning, Inspection and Repair

a. Clean all metal parts in cleaning solvent (Fed. Spec. P-D-680) and dry thoroughly.

b. Inspect camshaft for damage and wear to lobes and bearing journals.

c. Check oil pump gear teeth on camshaft for wear and damage.

d. Check camshaft as follows:

(1) Measure front bearing journal diameter. Diameter must be 1.8725 to 1.8715 inches (47.7 to 47.53 mm). Minimum wear diameter is 1.8705 inches (47.51 mm).

(2) Center bearing journal diameter should be 1.7465 to 1.7455 inches (44.36 to 44.33 mm). Minimum wear diameter is 1.7444 inches (44.30 mm).

(3) Rear bearing journal diameter should be 1.2475 to 1.2465 inches (31.68 to 31.66 mm). Minimum wear diameter is 1.7444 inches (44.30 mm).

e. Check camshaft bearing inside diameter.

(1) Front bearing inside diameter must be 1.8755 to 1.8745 inches (47.63 to 47.61 mm).

(2) Center bearing inside diameter must be 1.7802 to 1.7495 inches (44.45 to 44.43 mm).

(3) Rear bearing inside diameter should be 1.2505 to 1.2495 inches (31.76 to 31.73 mm).

(4) If bearings do not meet tolerances, replace bearings (8, 9 and 10, fig. 11-27).

(5) Use a suitable driving tool and drive bearing from block. Use a suitable bearing installer and install new bearing in block. When installing new bearing, be sure to line up oil hole in bearing with oil hole in block.

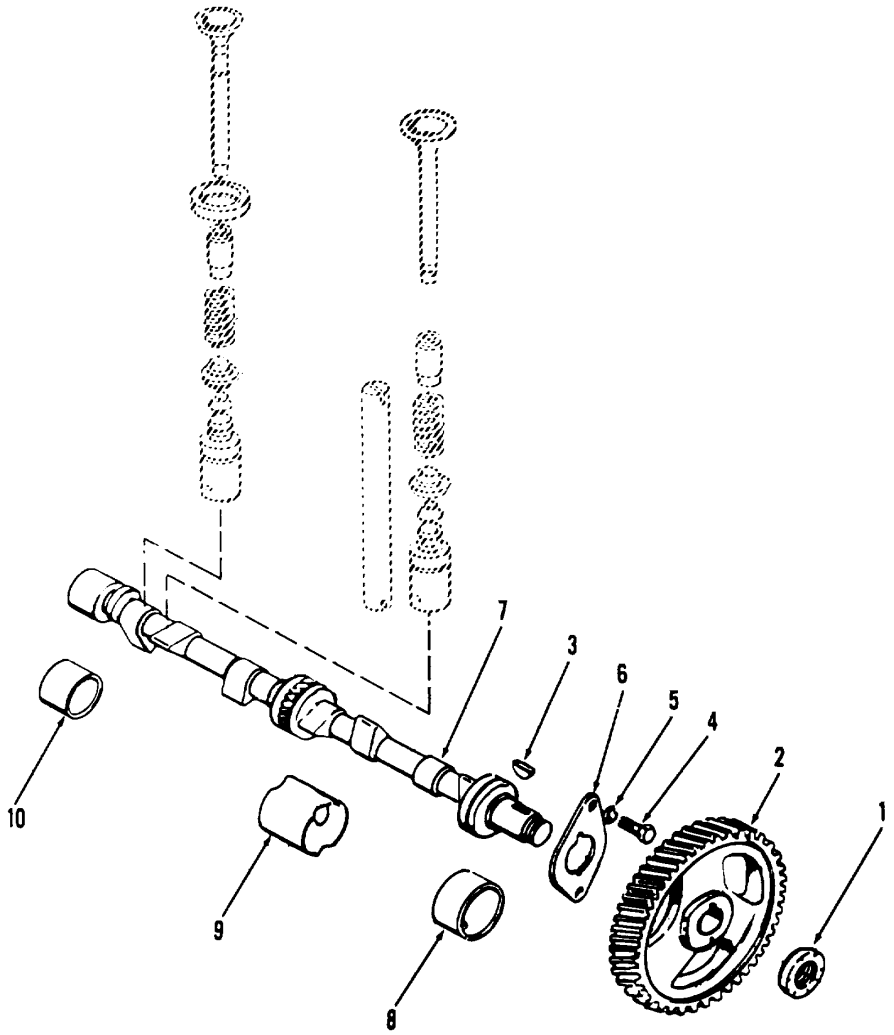

TA067467

1. Nut
2. Camshaft gear
3. Key
4. Screw
5. Lock washer
6. Thrust plate
7. Camshaft
8. Bearing
9. Bearing
10. Bearing

Figure 11-27.Camshaft, disassembly and reassembly.

11-26. Camshaft, Reassembly and Installation

a. Carefully slide camshaft (7, fig. 11-27) into block and bearings.

b. Install thrust plate (6) and secure with screws (4) and lock washers (5).

c. Install camshaft gear (2) and key (3) on shaft (7). Secure gear with nut (1). Tighten nut to a torque of 175 to 180 foot pounds (24.1 to 24.8 cm/kg).

d. Make sure the marked teeth on the camshaft gear straddle the marked tooth on the crankshaft gear (fig. 11-26).

e. To make sure there is enough clearance, hold finger at junction of the two gears and tap the rim of the camshaft gear with a light hammer (fig. 11-28) and check for vibration. Check fit of teeth with an 0.0015 inch (0.038 mm) feeler gage between teeth.

(1) If vibration is felt and feeler gage will not fit between gears, the gear fit is within expectations.

(2) Install a dial indicator as shown on figure 11-29 and check camshaft end play. End play must be 0.009 to 0.005 inch (0.228 to 0.127 mm).

f. Check camshaft end play. End play must be 0.009 to 0.005 inch (0.228 to 0.127 mm).

(1) Check camshaft thrust clearance as shown on figure 11-30.

(2) If camshaft end play does not conform to tolerances stated above, it may be corrected by

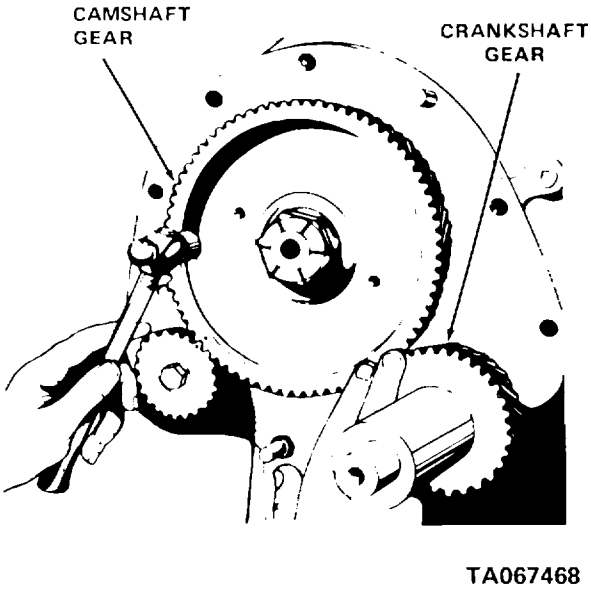

Figure 11-28. Checking camshaft gear fit.

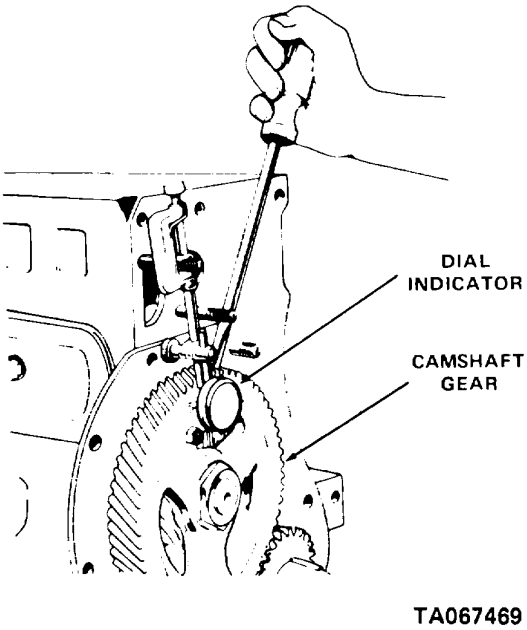

Figure 11-29. Checking camshaft end play.

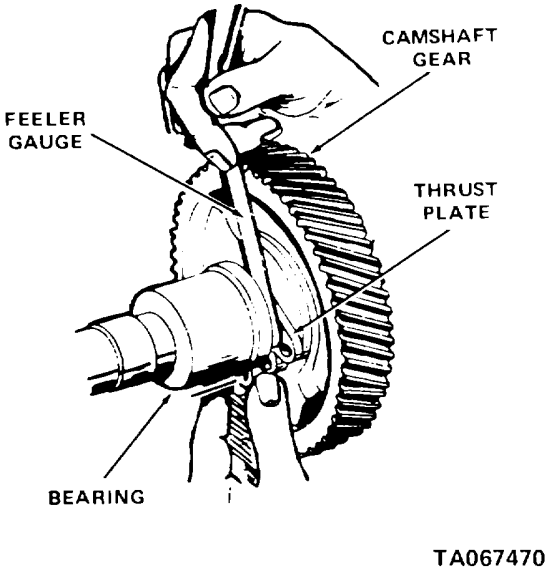

Figure 11-30. Checking camshaft thrust clearance.

installing a new thrust plate. If this does not correct the condition, it may be necessary to machine a small amount off from the shoulder of the thrust plate that engages the rear face of the gear.

g. Refer to paragraph 11-23 and install the gears and gear cover.

Section V. FLYWHEEL AND FLYWHEEL HOUSING

11-27. Description

a. The flywheel is mounted on the rear end of the crankshaft. The ring gear is mounted around the flywheel and meshes with the starter gear to start the engine.

b. Timing decals are mounted on the flywheel to aid in timing the engine.

11-28. Flywheel, Removal and Disassembly

a. Refer to paragraph 2-22 and remove the engine.

b. Refer to paragraph 2-25 and remove transmission and torque converter.

c. Remove the flywheel in numerical sequence as illustrated on figure 11-31.

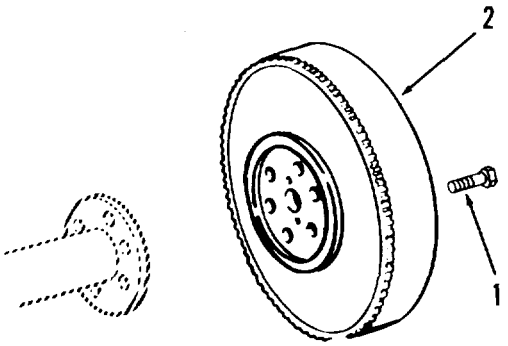

TA067471

1. Screw 2. Flywheel

Figure 11-31. Flywheel, removal and installation.

11-29. Flywheel, Cleaning, Inspection and Repair

a. Inspect ring gear (fig. 11-32) for broken teeth and damage. If ring gear is damaged, remove ring gear as follows:

(1) Grind a notch in ring gear at root of one of the teeth.

(2) Heat gear to 475°F (246°C) to expand gear. Pry gear from flywheel.

b. Clean all metal 1)arts in cleaning compound, solvent (Fed. Spec. P-D-680) and dry thoroughly.

c. Inspect mounting surface of flywheel for burs and nicks. Remove burs and nicks with fine emery cloth.

d. Inspect mounting holes and crankshaft flange for elongation and damage.

e. Replace unserviceable parts.

f. If ring gear (fig. 11-32) was removed, heat ring gear to 475°F (246°C). Start ring gear on flywheel with chamfered ends of teeth set to engage starter gear. Drive ring gear down tight against the shoulder on flywheel. Let ring gear cool slowly.

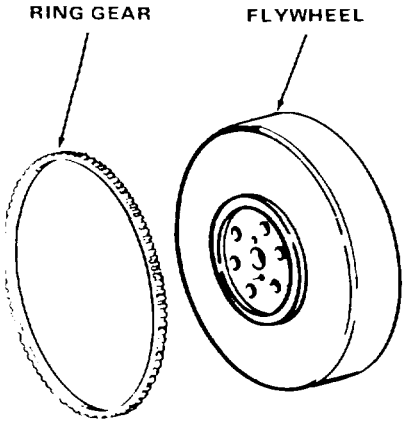

TA067472

Figure 11-32. Flywheel ring gear, removal and installation.

11-30. Flywheel, Reassembly and Installation

a. Install two guide studs (3/8 - 24 x 4 inches long) in crankshaft flange and install flywheel on studs. Install screws (1, fig. 11-31) and tighten screws to a torque of 35 to 40 foot-pounds (47.4 to 54.2 N•m). Remove guide studs an(d install remaining screws.

b. Check flywheel as follows:

(1) Mount a dial indicator as shown in figure 11-33. Set indicator to contact vertical surface of flywheel. Maximum indicator reading must not exceed 0.008 inch (0.203 min).

(2) Mount dial indicator- as shown in figure 11-34 and check flywheel counterbore. Maximum indicator reading must not exceed 0.008 inch (0.203 mm).

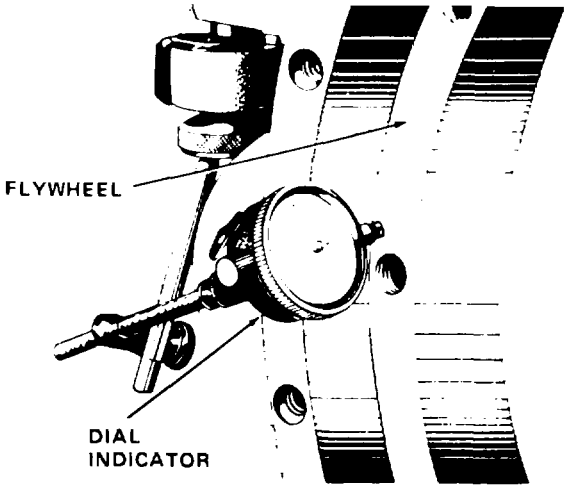

TA067473

Figure 11-33. Checking flywheel run-out.

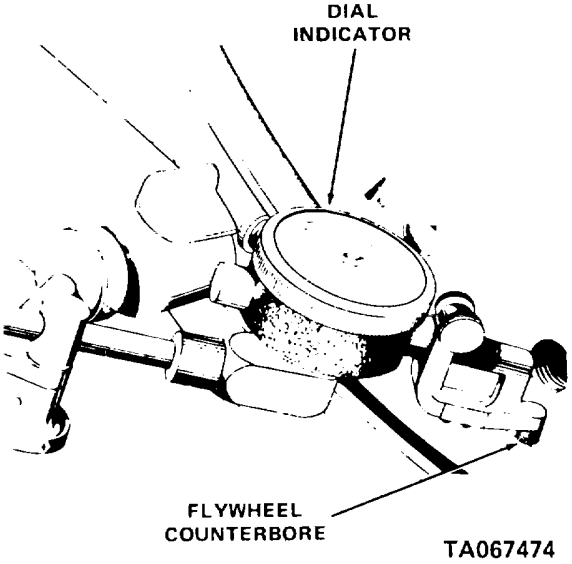

TA067474

Figure 11-34. Checking flywheel counterbore.

c. Refer to paragraph 2-27 and install torque converter and transmission.

d. Refer to paragraph 2-24 and install the engine.

11-31. Flywheel Housing, Removal and Disassembly

a. Removal.

(1) Refer to paragraph 2-22 and remove the engine and transmission.

(2) Refer to paragraph 2-25 and remove transmission and torque converter.

(3) Refer to paragraph 11-28 and remove the flywheel.

(4) Loosen screws on oil pan adjacent to the flywheel housing.

(5) Remove two screws (1 and 2, fig. 11-35) and lock washers (3) opposite each other and install two guide studs (7/16 - 14 x 4 inches long). Remove remaining screws (1 and 2) and lock washers (3) and remove flywheel housing over guide studs. Remove guide studs.

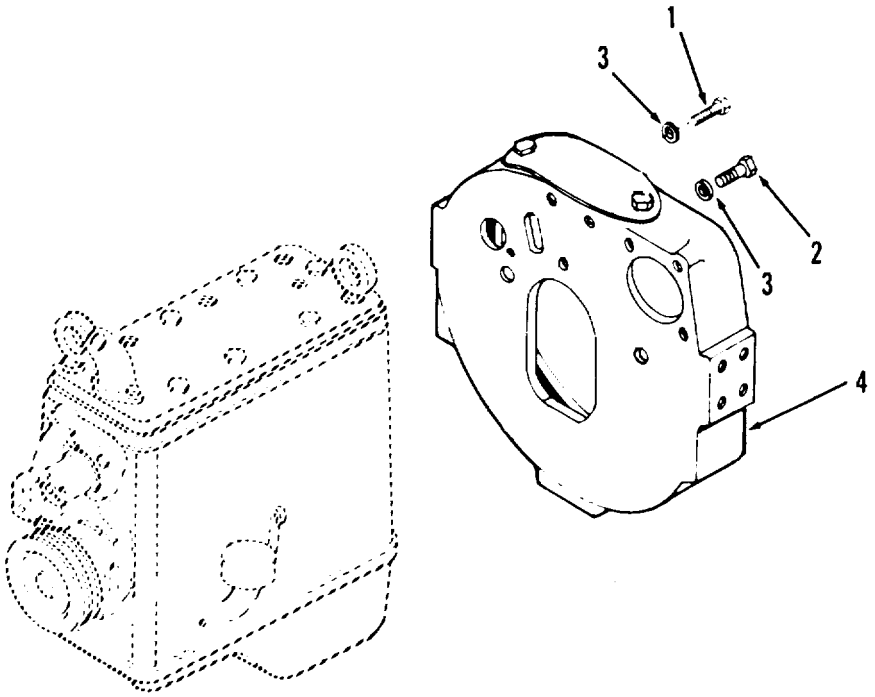

TA067475

1. Screw
2. Screw
3. Lock washer
4. Flywheel housing

Figure 11-35. Flywheel housing, removal, and installation.

b. Disassembly. Disassemble flywheel housing in numerical sequence as illustrated in figure 11-36.

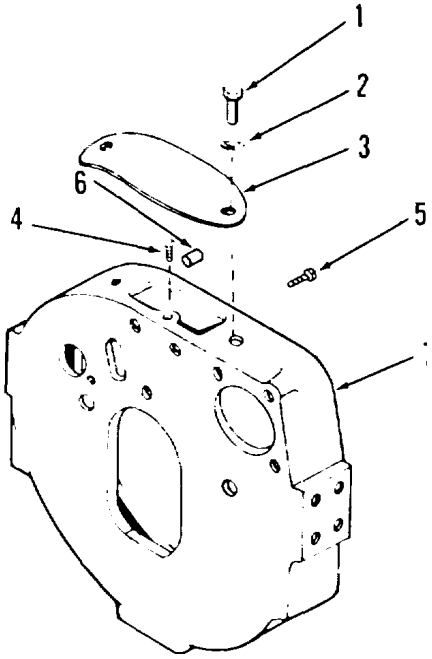

TA067476

1. Screw
2. Lock washer
3. Cover
4. Timing pin
5. Screw
6. Dowel
7. Flywheel housing

Figure 11-36. Flywheel housing, disassembly and reassembly.

11-32. Flywheel Housing Cleaning, Inspection and Repair

a. Clean all metal parts in cleaning compound, solvent (Fed. Spec. P-D-680) and dry thoroughly.

b. Inspect housing for cracks and damage.

11-33. Flywheel Housing, Reassembly and Installation

a. Reassembly. Reassemble the flywheel housing in reverse numerical sequence as illustrated in figure 11-36.

b. Installation.

(1) Install guide studs (7/16 - 14 x 4 inches long) in mounting holes in cylinder block for housing.

(2) Install flywheel housing on over studs. Install screws (1 and 2) and lock washers (3) and tighten to a torque of 50 to 55 foot pounds (67.7 to 74.5 N•m). Remove guide studs and install remaining screws. Tighten oil pan screws.

(3) Check flywheel housing as follows:

(a) Mount a dial indicator as shown in figure 11-37 and check flywheel housing face. Maximum indicator reading must not exceed 0.008 inch (0.203 mm).

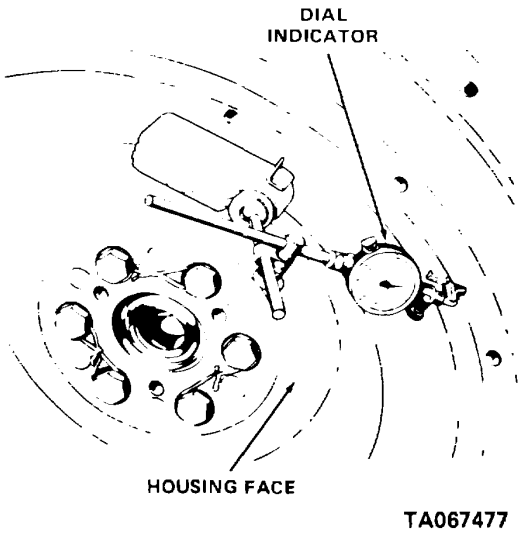

TA067477

Figure 11-37. Checking Flywheel housing face.

(b) Mount dial indicator as shown in figure 11-38 and check flywheel housing bore. Maximum indicator reading must not exceed 0.008 inch (0.203 mm).

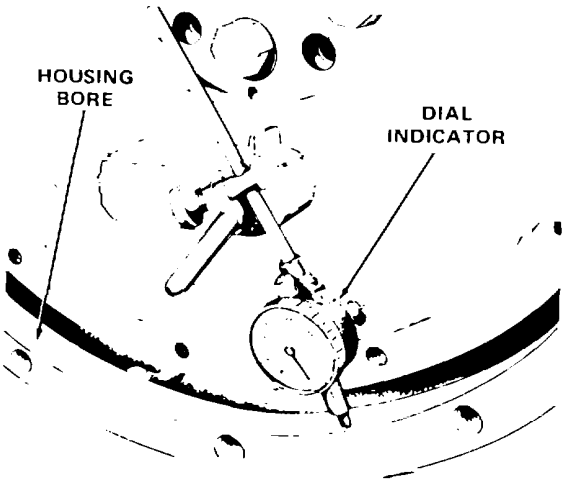

TA067478

Figure 11-38. Checking flywheel housing bore.

(4) Refer to paragraph 11-30 and install the flywheel.

(5) Refer to paragraph 2-27 and install transmission and torque converter.

(6) Refer to paragraph 2-24 and install the engine and transmission.

Section VI. CRANKSHAFT AND MAIN BEARINGS

11-34. Description

The crankshaft is forged of special heat treated steel. Rifle drilled passages carry oil to the connecting rods and main bearings.

11-35. Crankshaft and Main Bearing, Removal and Disassembly

a. Removal

(1) Refer to paragraph 2-22, drain the engine oil and remove the engine from the truck.

(2) Install the engine in an engine stand.

(3) Refer to paragraph 11-7 and remove the oil pan. Refer to paragraph 11-17 and remove connecting rod bearing caps and bearings.

(4) Refer to paragraph 11-21 and remove the gear cover and fan drive.

(5) Refer to paragraph 11-28 and remove the flywheel.

(6) Refer to paragraph 11-31 and remove the flywheel housing.

(7) Refer to paragraph 11-10 and remove the oil pump.

b. Disassembly. Disassemble the crankshaft and main bearings in numerical sequence as illustrated in figure 11-39.

11-36. Crankshaft and Main Bearing, Cleaning, Inspection and Repair

a. Clean crankshaft with cleaning compound, solvent (Fed. Spec. P-D-680) and dry thoroughly. Blow out oil passages with filtered compressed air.

b. Place crankshaft in "V" blocks. Place oil soaked paper strips in blocks before installing crankshaft to prevent marring of bearing surfaces.

c. Take a dial indicator reading at the center main bearing journal. Total run-out for center main bearing journal must not exceed 0.002 inch (0.050 mm).

d. Check the main bearing and connecting rod journals for out-of-round or tapered condition. Maximum allowable out-of-round condition is 0.0005 inch (0.0127 mm).

e. If journals are scored or worn, the crankshaft must be reground or replaced.

f. Measure diameter of connecting rod journals.

(1) Diameter must be 2.0627 to 2.0618 inches (52.39 to 52.37 mm).

(2) Minimum diameter wear limit is 2.0609 inches (52.34 mm).

g. Measure diameter of main bearing journals.

(1) diameter should be 2.3752 to 2.3744 inches (60.33 to 60.30 mm).

(2) Minimum diameter wear limit is 2.3734 inches (60.28 mm).

h. Do not grind crankshaft journals to remove more than 0.040 inch (1.01 mm).

i. When reground, the crankshaft fillet radii must be within limits and must be perfectly blended into thrust and bearing surfaces as shown on figure 11-40.

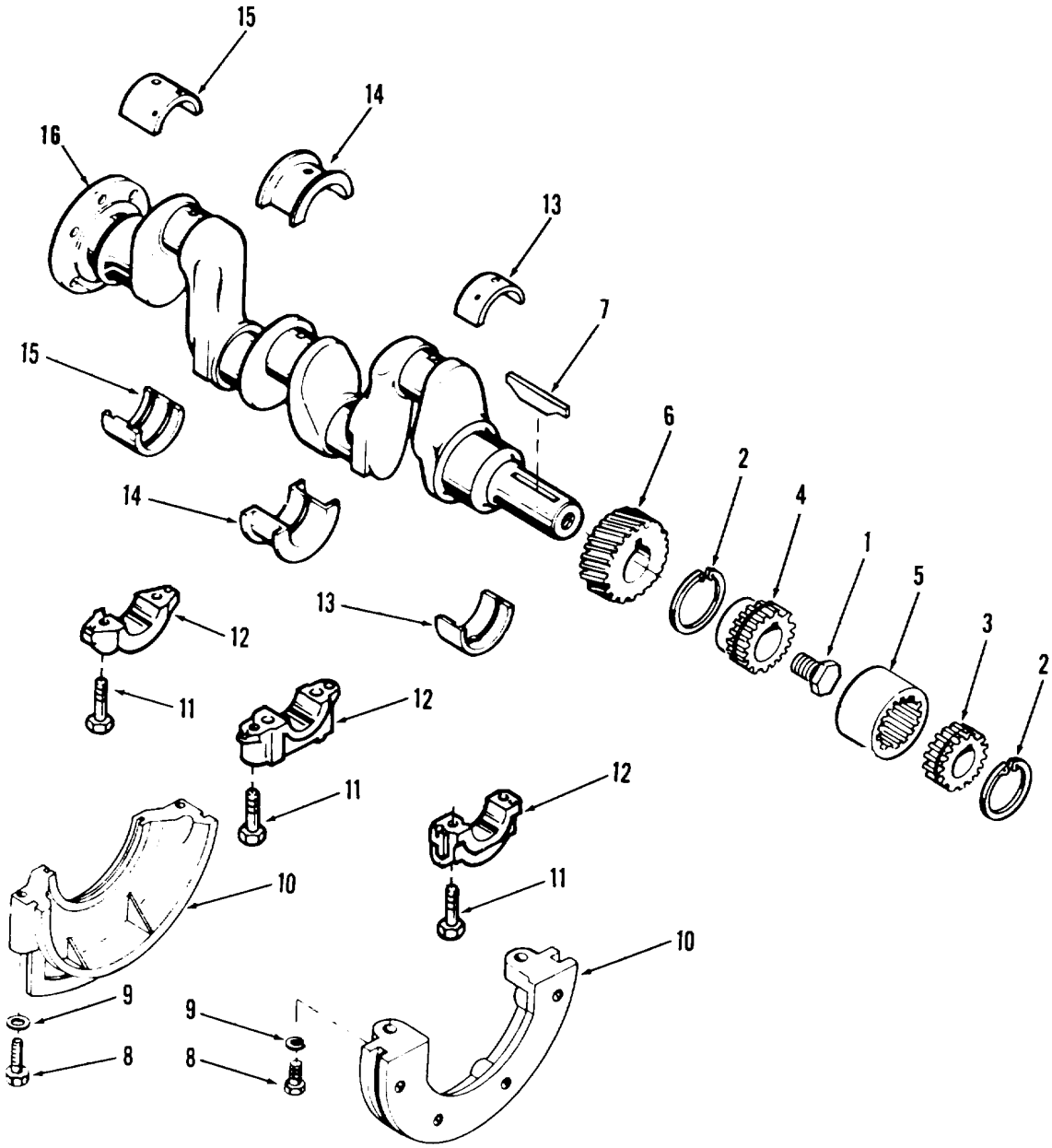

TA067479

1. Screw
2. Retaining ring
3. Pump drive gear
4. Pump coupling
5. Sleeve
6. Crankshaft gear
7. Key
8. Screw
9. Lock washer
10. Filler block
11. Bolt
12. Bearing cap
13. Front bearing set
14. Intermediate bearing set
15. Rear bearing set
16. Crankshaft

Figure 11-39. Crankshaft and main bearings, disassembly and reassembly.

j. Inspect and repair bearings as follows:

(1) Replace all bearing shells as sets.

(2) All bearing shells are machined precisely, for perfect fit. Do not scrape, bore or fit bearings.

(3) Inspect bearings for distortion, scoring and wear. If bearings show any of the three, replace bearings

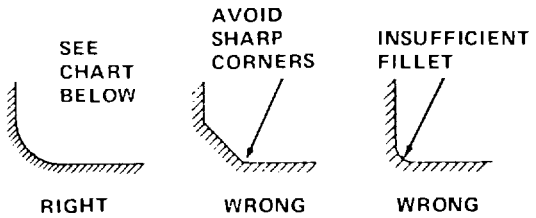

FILLET RADII.
0.078 TO 0.108 INCH ON ALL CRANKPINS AND MAIN BEARINGS EXCEPT REAR MAIN BEARING.
0.110 TO 0.140 ON REAR MAIN BEARING.

TA067480

Figure 11-40. Crankshaft fillet radii.

(4) Check bearing thickness with a micrometer

(*a*) Main bearing thickness must be 0.0925 to 0.0928 inch (2.34 to 2.35 1mm).

(*b*) Connecting rod bearing thickness must be 0.0616 to 0.0613 inch (1.56 to 1.55 mm*).*

(5) Replace main bearings if thickness is less than 0.0920 inch (2.33 mm). Replace connecting rod bearings if thickness is less than 0.608 inch (15.4 mm).

k. Check bearings as follows:

(1) Install upper shells of main bearings and connecting rod bearings in block and connecting rod.

(2) Install crankshaft in block and connecting rods.

(3) Place a piece of feeler stock, 0.0010 inch (0.0025 mm) thick across main bearing shells.

(4) Install main bearing cap and evenly tighten bolts to a torque of 85 to 95 foot pounds (115.2 to 128.8 N•m).

(5) Try to turn crankshaft by hand. If a definite drag is felt, the bearing and crankshaft are in tolerance.

(6) Remove bearing cap and remove feeler stock. Repeat operation for each main bearing, one at a time.

11-37. Crankshaft and Main Bearing Reassembly and Installation

a. Reassembly.

(1) If not already installed, install upper main and connecting rod bearing shells.

(2) Carefully lift and install crankshaft (16, fig. 11-39) in engine block. Install lower main and connecting rod bearing shells on journals.

(3) Install main bearing caps and tighten bolts to 85 to 95 foot pounds (115.2 to 128.8 N•m).

(4) Install connecting rod bearing caps and tighten nuts to 40 to 45 foot-pounds (54.2 to 61.0 N•m).

(5) Refer to paragraph 11-12 and install oil pump and secure to main bearing cap with nut and lockwasher.

(6) Install key (7, fig. 11-39) and gear (6) on crankshaft. Use a driving sleeve to tap gear snugly in place. Install pump coupling (4) and retaining rings (2). Secure coupling and gear with screw (1). Tighten screw to a torque of 140 to 150 foot pounds (189.8 to 203.3 N•m).

b. Installation.

(1) Refer to paragraph 11-23 and install fan drive and gear cover.

(2) Refer to paragraph 11-9 and install the oil pan.

(3) Refer to paragraph 11-31 and install the flywheel housing an(d flywheel.

(4) Refer to paragraph 2-24 and install engine in truck.

Section VII. CLYINDER BLOCK

11-38. Description

The cylinder block and(crankcase are cast as a single unit. Bearing crosswalls and water baffles are filleted. Honed cylinder bores are exposed to coolant for their entire length. Intake and exhaust ports are arranged along the upper left side of the cylinder block. Directly below the ports is a valve and tappet chamber enclose(l by a cover. The camshaft extends the length of the left side of the crankcase and rotates in three bearings.

11-39. Cylinder Block, Removal and Disassembly

a. Removal

(1) Refer to paragraph 2-22 and remove the engine from the truck.

(2) Refer to TAM 10-3930-630-12 and remove the cylinder head and manifolds.

(3) Refer to paragraph 11-3 and remove the valve mechanism.

(4) Refer to paragraph 11-7 and remove the oil pan.

(5) Refer to paragraph 11-10 an(d remove the oil pump.

(6) Refer to paragraph 11-17 and remove the pistons and connecting rods.

(7) Refer to paragraph 11-21 and remove the gear cam and fan drive.

(8) Refer to paragraph 11-24 and remove the camshaft.

(9) Refer to paragraph 11-28 and remove the flywheel.

(10) Refer to paragraph 11-31 and remove the flywheel housing.

(11) Refer to paragraph 11-35 and remove the crankshaft and main bearings.

(12) Refer to paragraph 11-13 and remove oil pressure relief valve.

b. Disassembly. Disassemble the cylinder block in numerical sequence as illustrated in figure 11-41.

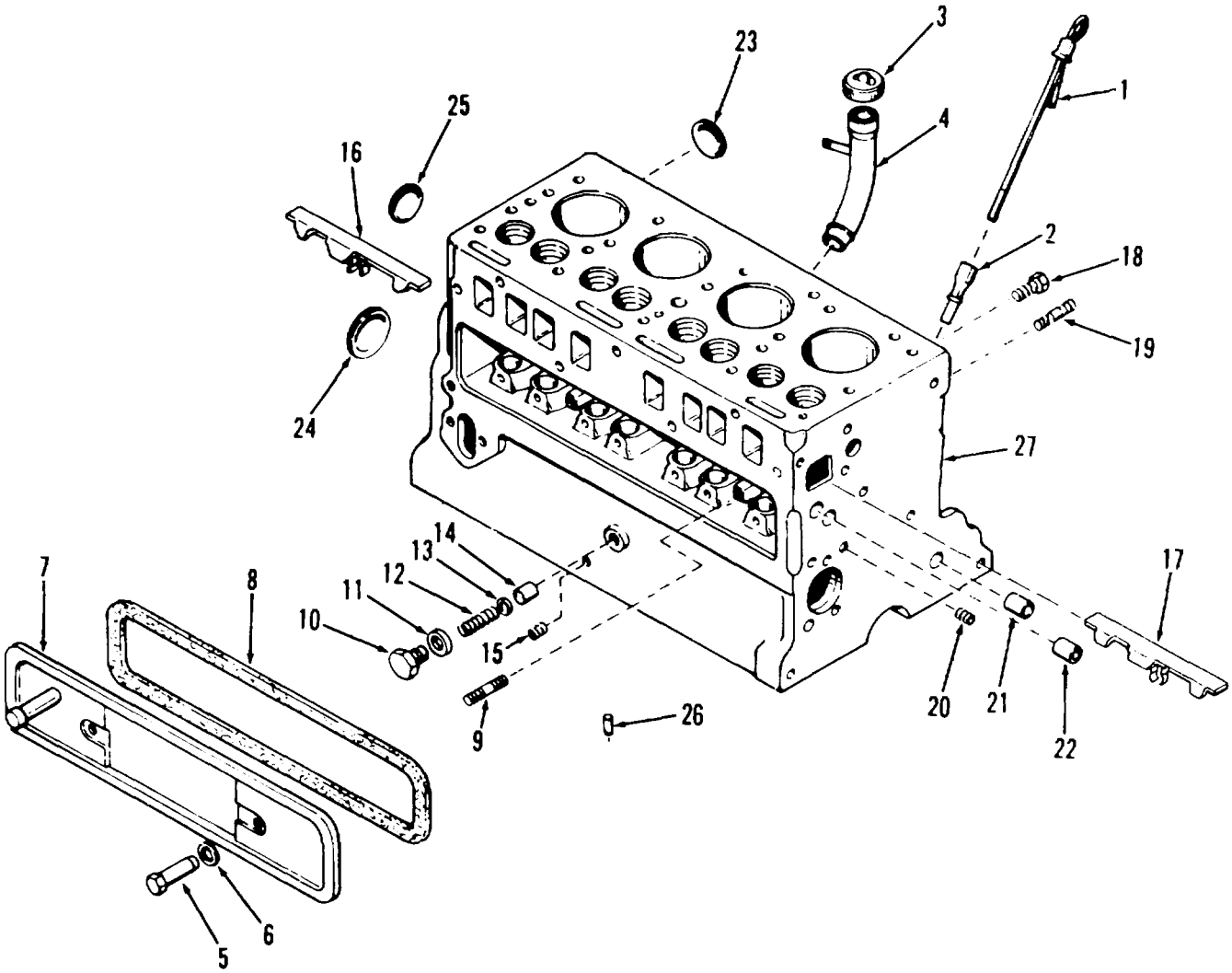

TA067481

1. Oil gage	10. Plug	19. Stud
2. Support	11. Gasket	20. Dowel ring
3. Filler cap	12. Spring	21. Dowel ring
4. Filler tube	13. Washer	22. Expansion plug
5. Nut	14. Relief valve	23. Expansion plug
6. Washer	15. Plug	24. Expansion plug
7. Cover	16. Oil baffle	25. Expansion plug
8. Gasket	17. Oil baffle	26. Dowel pin
9. Stud	18. Screw	27. Cylinder block

Figure 11-41. Cylinder block, disassembly and reassembly

1-40. Cylinder Block, Cleaning, Inspection and Repair

a. Clean all oil passages with cleaning solvent Fed. Spec. P-D-680) and blow out with compressed air.

b. Clean valve compartment and cylinders thoroughly. Remove carbon deposits from top of crankcase and cylinder walls. Do not nick or scratch surfaces.

c. Inspect crankcase for cracks in the exhaust salve area and bearing flanges.

d. Check cylinders with a micrometer as follows:

(1) Measure original bore diameter above ring travel with a micrometer as shown on figure 11-42, at 45 degree intervals.

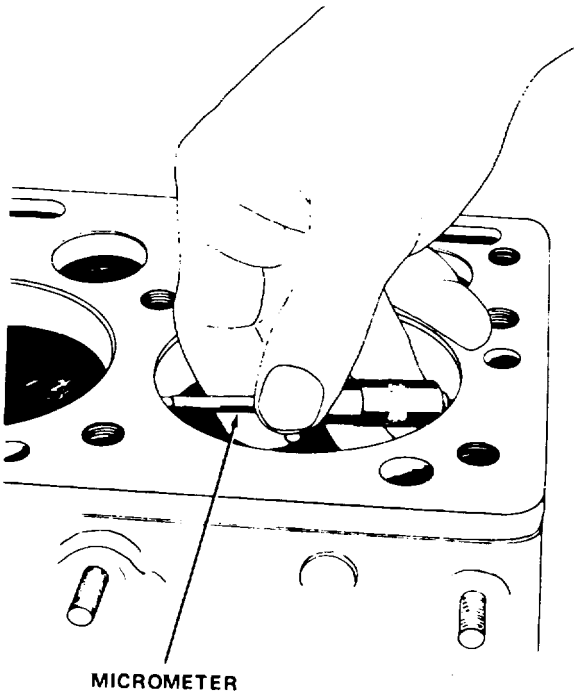

TA067482

Figure 11-42. Measuring cylinder bore diameter.

(2) Measure the bore diameter below the top of ring travel in the same manner.

(3) If the difference between the two measurements does not exceed 0.008 inch (0.202 mm), the engine does not have to be rebored.

(4) If the difference exceeds 0.008 inch, rebore the cylinder.

e. Repair cylinder as follows:

(1) Ridge ream the cylinder to remove the unworn area at the top.

(2) Rebore cylinder diameter to a maximum of 3.1268 inches (79.42-mm). This diameter will allow a 0.002 inch (0.050-mm) excess to allow for honing the cylinder walls.

(3) Hone cylinders with a suitable honing tool to a good cross hatch honed pattern.

(4) Insert hone into cylinder and expand to cylinder wall with a slight tension as shown in figure 11-43.

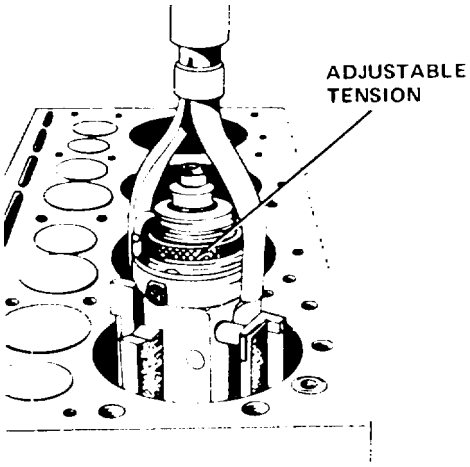

TA067483

Figure 11-43. Honing cylinders

(5) Use a clean brush and wet cylinder walls and stones with kerosene. Use a hand drill and surface one cylinder with an up and down motion. Apply kerosene as needed occasionally while honing. Increase tension until a good finish is obtained. A smooth finish of 10 to 15 micro inches is desired.

(6) Remove hone. Clean bores with a clean rag soaked in oil (OE/HDO). Wipe bore clean with a clean dry cloth. Measure bores with a micrometer to see that they are within tolerances specified above.

11-41. Cylinder Block, Reassembly and Installation

a. Reassembly. Reassemble the cylinder block in reverse numerical sequence as illustrated in figure 11-41.

b. Installation.

(1) Refer to paragraph 11-26 and install the camshaft.

(2) Refer to paragraph 11-37 and install the crankshaft and main bearings.

(3) Refer to para, graph 11-33 and install the flywheel housing.

(4) Refer to paragraph 11-30 and install the flywheel.

(5) Refer to paragraph 11-23 and install the gear cover and fan drive.

(6) Refer to paragraph 11-19 and install the piston and connecting rods.

(7) Refer to paragraph 11-15 and install the oil pressure relief valve.

(8) Refer to paragraph 11-12 and install the oil pump.

(9) Refer to paragraph 11-9 and install the oil pan.

(10) Refer to paragraph 11-5 and install the valve mechanism.

(11) Refer to TM 10-3930-630-12 and install the cylinder head and manifolds.

(12) Refer to paragraph 2-24 and install the engine in the truck.

11-42. Engine Run In and Test

a. Refer to TM 10-3930-630-12 and check to be sure all electrical, hydraulic and lubricant wires, lines and hoses are connected properly.

b. Refer to paragraph 2-21 and test engine.

CHAPTER 12
TRANSMISSION REPAIR INSTRUCTIONS

Section I. TRANSMISSION CONTROLS

12-1. Description

a. The power shift transmission (fig. 12-1) consists of three major components: the torque converter, a hydraulically actuated clutch pack and a single speed, constant mesh transmission.

b. A single lever type shift control is mounted on the steering column to control the direction of travel through a control valve mounted on the transmission housing.

c. The transmission is controlled through a linkage extending from the bottom of the control column. A lever at the end of the column is connected to the transmission forward and reverse plunger with a shift rod and clevis.

d. The inching pedal operates the inching valve through a pin and screw attached to the valve plunger.

12-2. Transmission Controls, Removal and Disassembly

a. Removal.

(1) Refer to TM 10-3930-630-12 and remove floor and toe plates.

(2) Removal of the transmission controls is

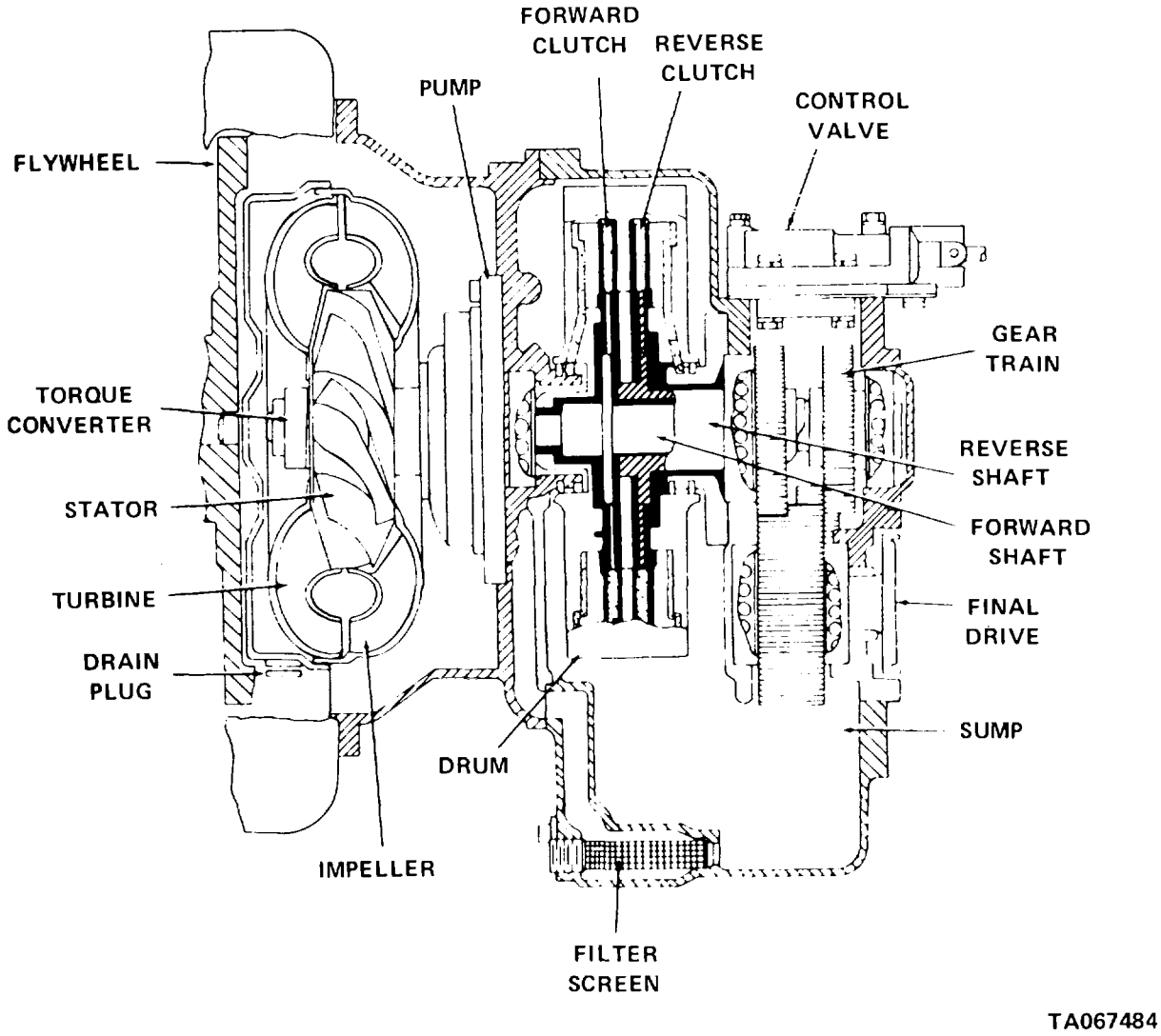

Figure 12-1. Transmission, cutaway view.

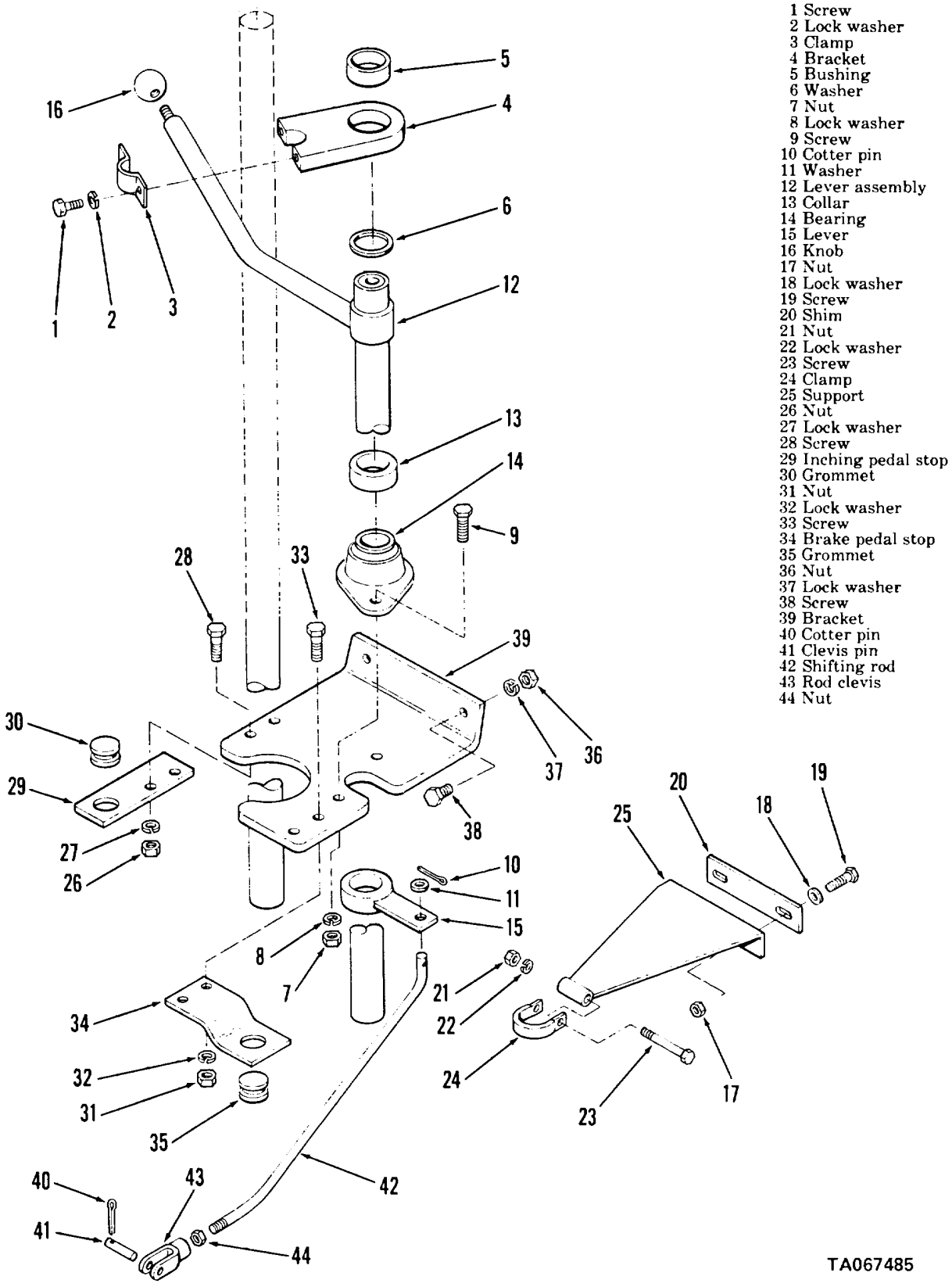

Figure 12-2. Control lever linkage, disassembly and reassembly.

accomplished during the disassembly procedures.

b. Disassembly.

(1) Disassemble the control lever linkage in numerical sequence as illustrated in figure 12-2.

(2) Disassemble the inching control in numerical sequence as illustrated in figure 12-3.

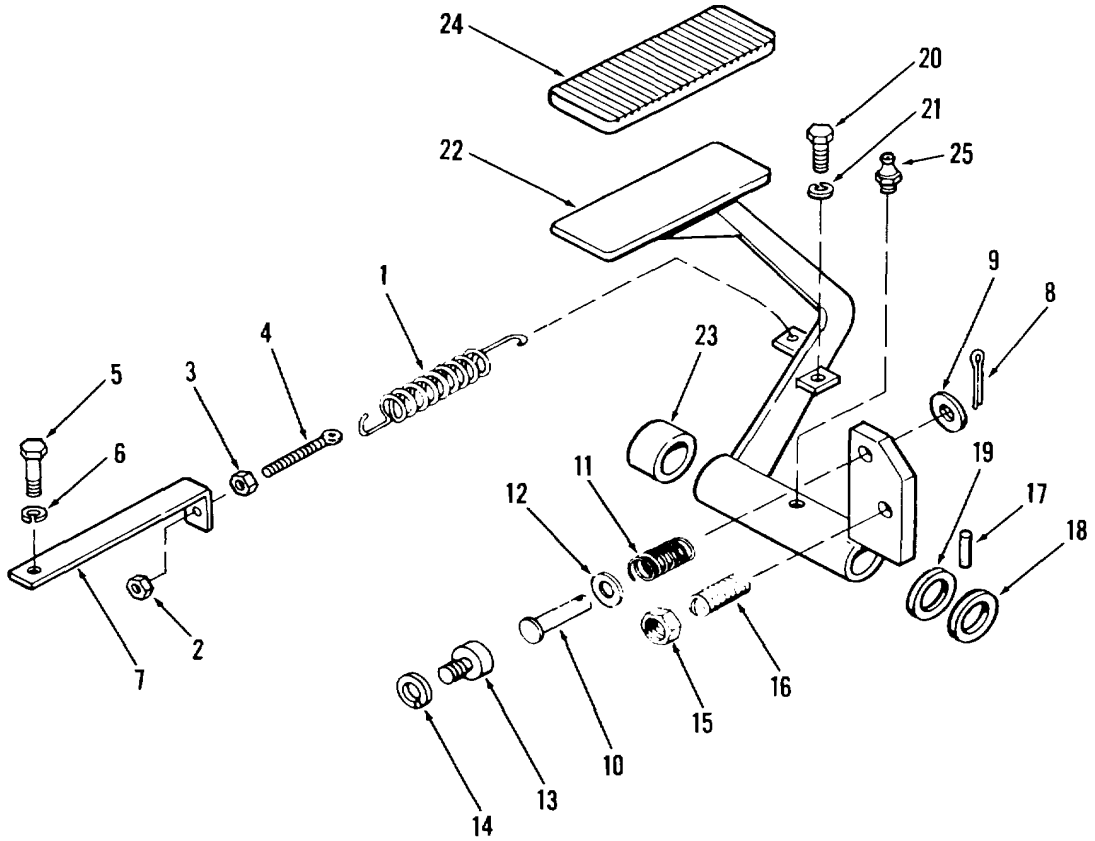

TA067486

1. Spring	6. Nut	11. Inching spring	16. Setscrew	21. Nut
2. Nut	7. Anchor	12. Washer	17. Spring pin	22. Inching pedal
3. Nut	8. Cotter pin	13. Inching button	18. Washer	23. Bushing
4. Adjusting screw	9. Washer	14. Lockwasher	19. Washer	24. Pall
5. Screw	10. Pin	15. Nut	20. Screw	25. Lubrication fitting

Figure 12-3. Inching control, disassembly and reassembly.

12-3. Transmission Controls, Cleaning, Inspection and Repair

a. Clean all metal parts in cleaning solvent (Fed. Spec. P-D-680) and dry thoroughly.

b. Inspect shifting rod for bends, cracks and damaged threads. Replace rod if damage is noted.

c. Inspect shifting lever for cracks, breaks or other damage. Replace lever, bushing, collar or flange if damage is apparent.

d. Inspect all threaded parts for stripped threads and replace if damage is noted.

e. Inspect return spring and plunger spring for proper free length. The return spring must have a free length of 9.94 to 10.06 inches (252.4 to 269.2 mm) and the plunger spring free length must be 0.50 inches (12.7mm).

12-4. Transmission Controls, Reassembly and Installation

a. Reassembly.

(1) Reassemble the inching control in reverse numerical sequence as illustrated in figure 12-3.

(2) Reassemble the control lever linkage in reverse numerical sequence as illustrated in figure 12-2.

b. Installation.

(1) Refer to TM 10-3930-630-12 and adjust the transmission controls.

(2) Refer to TM 10-3930-630-12 and install the floor and toe plates.

Section II. TRANSMISSION CONTROL VALVE

12-5. Description

a. The control valve is mounted on the transmission housing and forms the top closure of the transmission case.

b. Machined porting plates are attached to the bottom of the valve to eliminate external piping. Passages in the plates align with passages drilled or cast into the transmission housing.

12-6. Transmission Control Valve, Removal and Disassembly

a. Removal.

(1) Refer to TM 10-3930-630-12 and remove floor and toe plates.

(2) Refer to figure 12-4 and disconnect the control linkage at the control valve.

(3) Refer to figure 12-4 and disconnect tube assembly from the control valve. Cap tube assembly to prevent entrance of foreign matter.

(4) Refer to figure 12-4 and remove control valve mounting screws and remove control valve. Remove and discard gasket. Place a clean covering over exposed area of transmission to prevent contamination.

b. Disassembly. Disassemble the transmission control valve in numerical sequence as illustrated in figure 12-5.

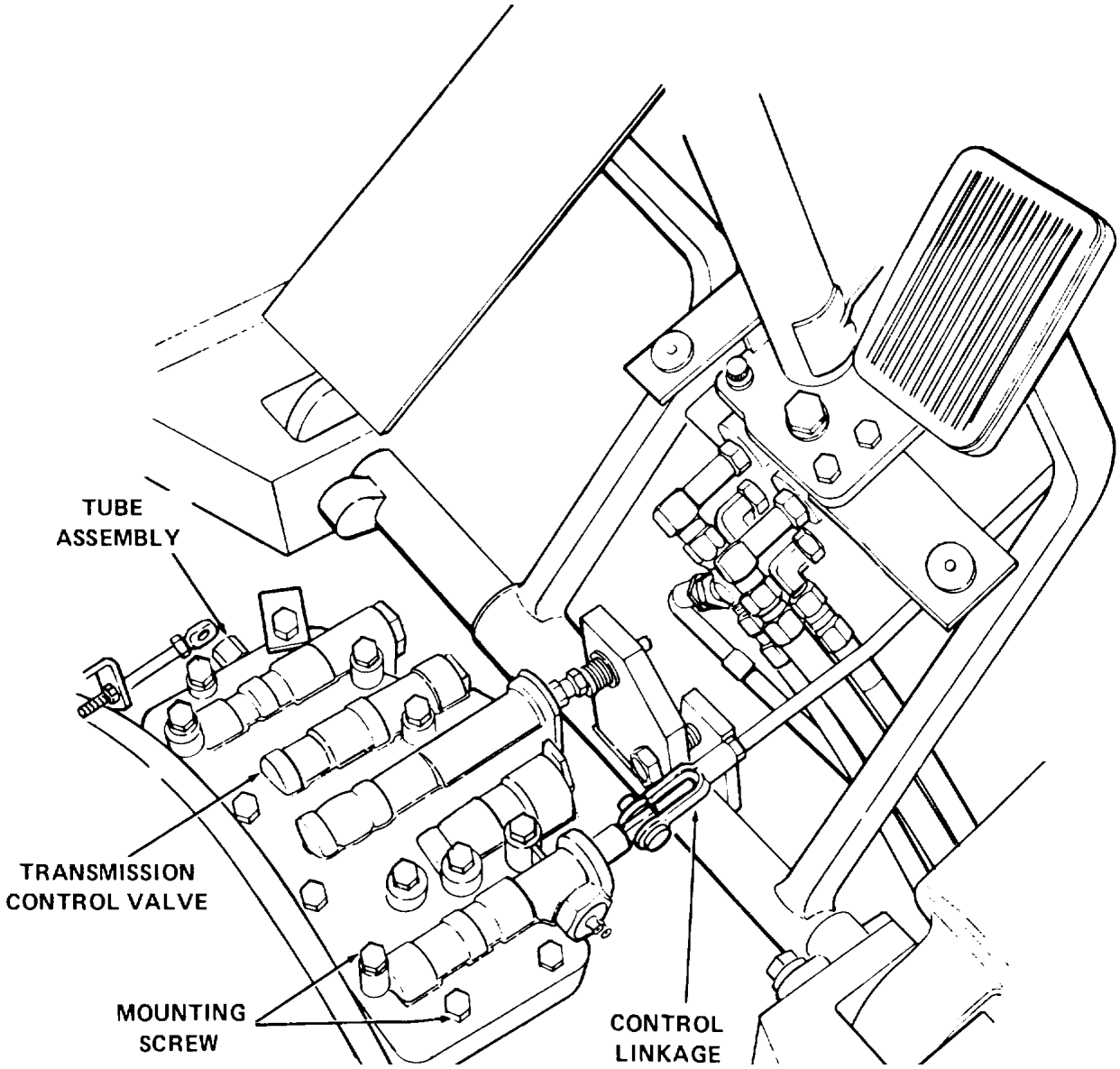

TA067487

Figure 12-4. Transmission control valve, removal and installation.

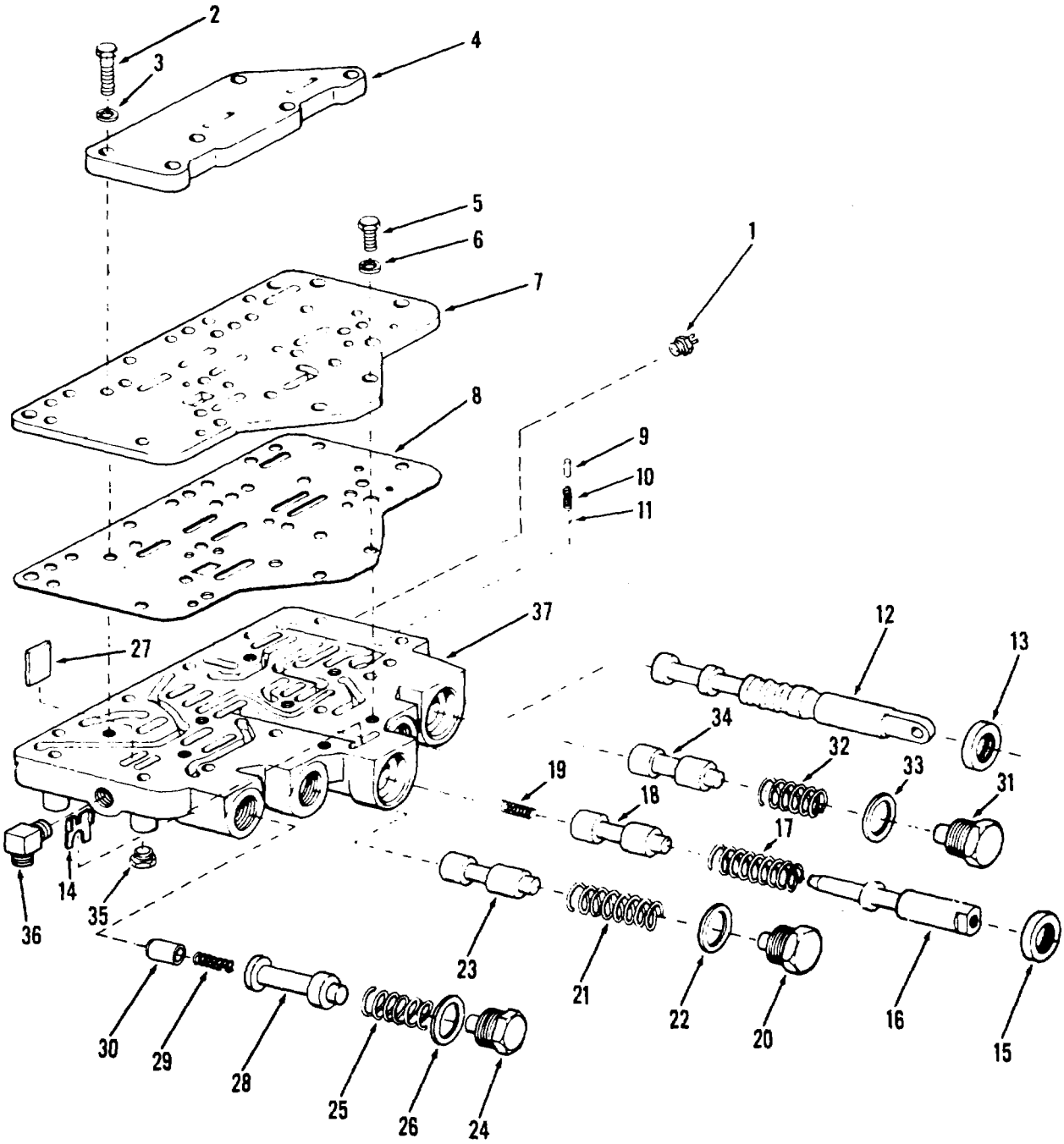

TA067488

1	Neutral start switch	8	Gasket	15	Oil seal	22	Seal	30	Lube valve
2	Screw	9	Detent pin	16	Plunger	23	Regulator valve spool	31	Cap
3	Lock washer	10	Detent spring	17	Spring	24	Cap	32	Spring
4	Cover	11	Detent ball	18	Inching valve spool	25	Sprang	33	Seal
5	Screw	12	Selector valve spool	19	Spring	26	Seal	34	Dump valve spool
6	Lockwasher	13	Oil seal	20	Cap	27	Plate	35	Plug
7	Separator plate	14	Stop	21	Spring	28	Converter regulator valve	36	Elbow
						29	Spring	37	Valve body

Figure 12-5. Transmission control valve, disassembly and reassembly.

12-7. Transmission Control Valve, Cleaning, Inspection and Repair

a. Wash all metal parts in cleaning solvent, (Fed. Spec. P-D-680) and dry with compressed air.

b. Blow out all passages in the valve body with compressed air.

c. Check plungers and spools for scratches or scoring, clean with crocus cloth. If severely damaged, replace.

d. Check springs for cracks, breaks or other damage. Replace if necessary.

e. Replace all gaskets, seal rings, and oil seals at reassembly.

12-8. Transmission Control Valve, Reassembly and Installation

a. *Reassembly*. Reassemble transmission control valve in reverse numerical sequence as illustrated in figure 12-5.

NOTE

Check all plungers and spools to be certain they operate freely. Be certain the inching control plunger stop is installed with the angled edges facing toward the rear of the valve body.

b. *Installation.*

(1) Remove covering from transmission and install a new gasket.

(2) Refer to figure 12-4 and position control valve on transmission and secure with mounting screws. Torque screws to 5 to 10 foot-pounds (6.7 to 13.5 N-m).

(3) Remove cap from tube assembly and connect assembly to the control valve.

(4) Reconnect control linkage to control valve.

(5) Refer to paragraph 12-12b for test and adjustments, if necessary.

(6) Refer to TM 10-3930-630-12 and install floor and toe plates.

Section III. TRANSMISSION AND TORQUE CONVERTER

12-9. General

a. Power from the engine is delivered to the torque converter which, in turn, drives a pump and clutch pack. Housed in the clutch drum are two double faced clutch plates which, when activated, move the truck forward or in reverse through splined hubs transmitting power to the gear train.

b. If the reverse clutch is activated, power is delivered to the transmission through a hollow shaft which connects the reverse gear and reverse clutch. If the forward clutch is actuated, power is delivered to the transmission through a solid shaft, which rotates inside the hollow reverse shaft connecting the forward gear and forward clutch.

12-10. Transmission and Torque Converter, Removal and Disassembly

a. Removal. Refer to paragraph 2-25 and remove the transmission.

b. Disassembly.

(1) Clean the exterior of transmission with cleaning solvent, (Fed. Spec. P-D-680) to prevent system contamination.

(2) Refer to paragraph 12-6 and remove the transmission control valve.

(3) Refer to figure 12-6 and mark oil pump assembly and housing to insure proper reassembly. Remove mounting screws holding oil pump assembly to converter housing. If necessary, tap pump assembly with a rawhide hammer to free it from the gasket.

(4) Remove tube assembly (1, fig. 12-7) and elbow (2). Remove oil level gage (68) and plugs (64, 65, 66 and 67). Remove pipe plug (61) and remove spring (62) and screen (63). Remove seat (16), washer (17), spring (18), and ball (19) from converter housing.

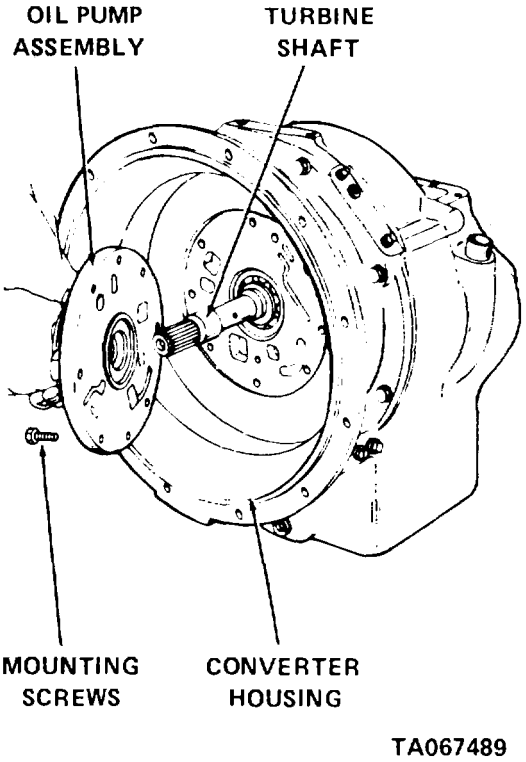

Figure 12-6. Transmission oil pump, removal and installation.

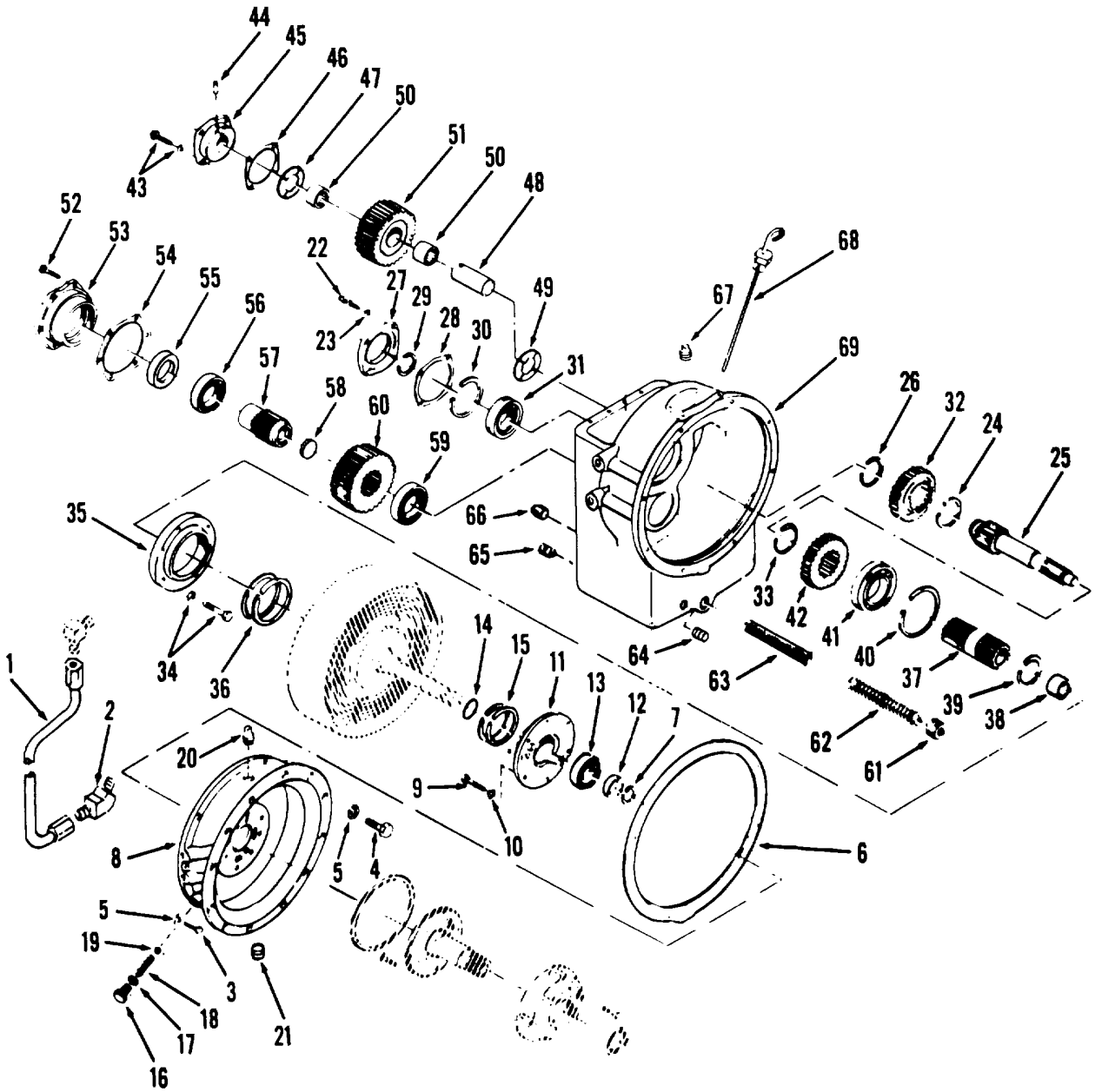

TA067490

1	Tube assembly	15	Packing	29	Retaining ring	43	Screw and lock washer	57	Output shaft
2	Elbow	16	Spring seat	30	Retaining ring	44	Idler pin	58	Plug
3	Screw	17	Washer	31	Ball bearing	45	Shaft retainer	59	Ball bearing
4	Screw	18	Ball spring	32	Forward gear	46	Gasket	60	Output gear
5	Lock washer	19	Bearing ball	33	Retaining ring	47	Thrust washer	61	Pipe plug
6	Gasket	20	Plug	34	Screw and lock washer	48	Idler shaft	62	Screen spring
7	Retaining ring	21	Plug	35	Retainer	49	Thrust washer	63	Filter screen
8	Housing	22	Screw	36	Packing	50	Roller bearing	64	Plug
9	Screw	23	Lock washer	37	Drive shaft	51	Idler gear	65	Plug
10	Lock washer	24	Retaining ring	38	Roller bearing	52	Screw	66	Plug
11	Retainer	25	Drive shaft	39	Retaining ring	53	Bearing retainer	67	Plug
12	Spacer	26	Retaining ring	40	Retaining ring	54	Gasket	68	Oil level gage
13	Ball bearing	27	Retainer	41	Ball bearing	55	Oil seal	69	Case
14	Packing	28	Gasket	42	Reverse gear	56	Ball bearing		

Figure 12-7. Transmission and torque converter, disassembly and reassembly.

(5) Lay the transmission on the gear case side and remove screws (3 and 4) and lock washers (5) which mount the converter housing (8) to the transmission case. Attach a chain to the converter housing and remove housing (8) and drum assem-bly as a unit. Take care not to damage seal rings (14) in retainer (11) on the gear case.

(6) Remove retaining ring (7) from the turbine shaft and slide housing (8) from drum assembly. Bearing (13) will remain in retainer. Remove spacer (12). Remove screws (9) and lock washers (10) and remove retainer (11). Remove packings (14) and (15).

(7) Remove forward gear and shaft.

(a) Remove screws (22) and lock washers (23) securing retainer (27) to the case. Remove gasket (28).

(b) Remove inner retaining ring (24) from the spline(d section of the forward drive shaft (25).

(c) Using a rawhide hammer, tap the shaft at the clutch end and holding the forward gear (32), pull the shaft from the gear box. See figure 12-8.

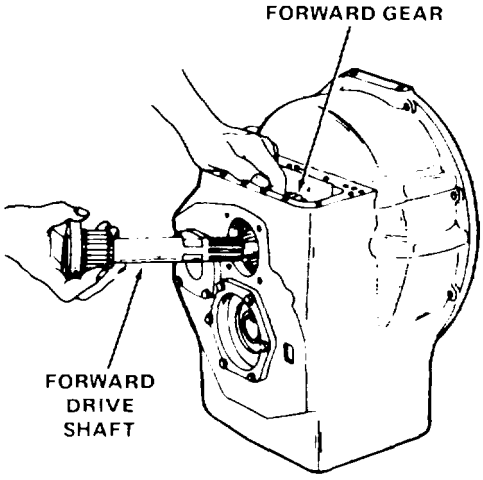

TA067491

Figure 12-8. Forward gear and shaft, removal and installation.

(8) Remove reverse gear and shaft (fig. 12-9).

(a) Remove inner retaining ring (33, fig. 12-7) from splined section of the reverse drive shaft (37).

(b) Match mark relationship of bearing retainer (35) and housing to insure correct installation.

(c) Remove screws (34) that secure bearing retainer (35) to the housing and remove the retainer. If packings (36) must be replaced, unhook at ring opening and remove.

(d) Remove shaft (37) while holding the reverse gear (42) in the gear box. Refer to figure 12-9.

(e) The bearings (31 and 41, fig. 12-7) on both the forward and reverse drive shafts can be

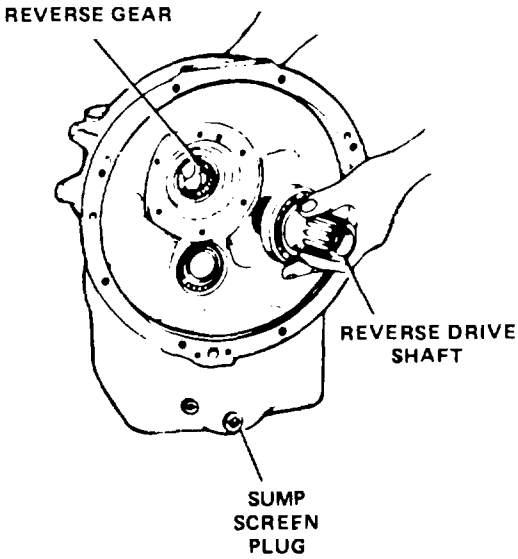

TA067492

Figure 12-9. Reverse gear and shaft, removal and installation.

removed by removing the retaining rings (30 and 40) and pressing the bearings from the shafts.

(9) Remove idler gear and shaft. See figure 12-10.

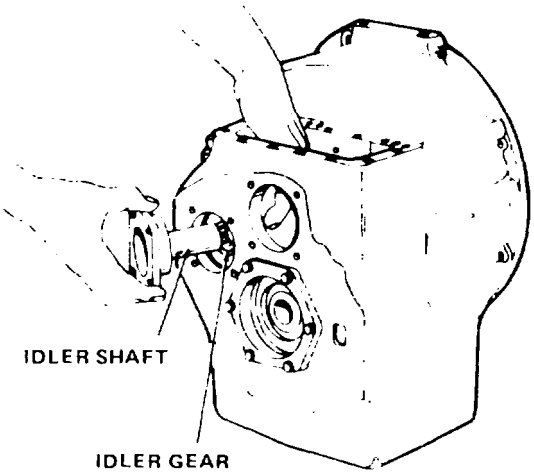

TA067493

Figure 12-10. Removing idler gear and shaft.

(a) Remove screws (43, fig. 12-7) holding idler gear shaft (48) and shaft retainer (45) to the housing and remove the shaft and retainer. Note position of idler pin (44) holding shaft In cap to insure proper assembly.

(b) Remove idler gear (51).

(10) Remove output gear and shaft. See figure 12-11.

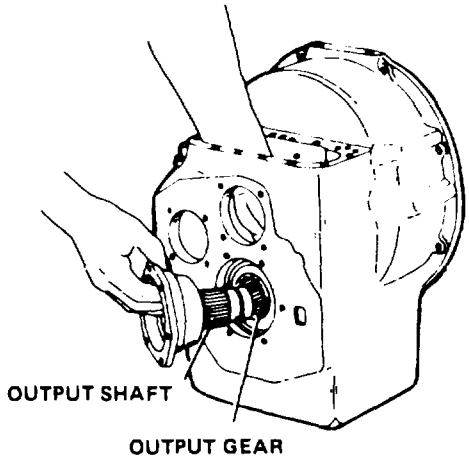

TA067494

Figure 12-11. Removing output shaft and gear.

(a) Remove screws (52, fig. 12-6) holding output shaft retainer (53) to housing.

(b) Remove output shaft (57) and retainer (53), while holding output gear (60) inside gear box. It may be necessary to tap the output shaft from inside the clutch housing to facilitate removal.

(c) Remove output gear (60).

(11) Drum assembly which was removed in (6) above can now be disassembled.

CAUTION

The front and rear clutch assemblies are balanced. Two lines are etched on rear clutch cylinder to indicate correct align-ment of the cylinder with the piston. One etched line is used to indicate correct alignment for forward clutch cylinder with the piston. If etched marks cannot be located, punch or scribe marks on the cylinders and piston to insure proper alignment during reassembly.

(a) Place the drum assembly in an arbor press. Remove seven screws (4, fig. 12-12), apply pressure on the turbine shaft (6) until the cylinder is depressed enough to remove the large retaining ring (1) from the drum. Remove turbine shaft (6). Remove roller bearing (9).

(b) Remove screws (2) and lock plates (3) from cylinder.

(c) Slowly release the arbor press pressure and remove front cylinder (5) making sure it is kept in alignment to prevent binding in the drum. If binding occurs, tap cylinder lightly with a rawhide hammer until it is released. Remove packings (7 and 8).

(d) Remove piston (10), forward disc (11) and springs (12). Take care that piston ring is not damaged or binding during removal.

(e) Turn drum over and remove screws (13), lock plates (14), retaining ring (15), rear cylinder (16), piston (19), and reverse disc (20). Remove packings (17 and 18). Remove pins (21) from pressure plate (22). Remove roller bearing (23) from rear cylinder.

12-11. Transmission and Torque Converter, Cleaning, Inspection and Repair

a. Wash all metal parts with cleaning solvent, (Fed. Spec. P-D-680) and dry thoroughly.

b. Blow out passages with compressed air.

c. Inspect bearings, seal ring, splined shafts and gears for wear or damage and replace if damage is severe.

d. Inspect sump screen for clogged or damaged screen and replace if necessary.

e. Check drive discs, pistons and drum for excessive wear or score marks. Replace if necessary.

f. Check piston rings making certain they are free in piston grooves.

g. Replace all seals and packings.

12-12. Transmission and Torque Converter, Reassembly and Installation

a. *Reassembly.*

(1) Assemble the drum assembly:

(a) Check etched or scribed marks on pistons and cylinders. Align marks before assembling clutches.

(b) Install the reverse disc (20, fig. 12-12), piston (19), new packings (17 and 18) and install roller bearing (23) and rear cylinder (16). Make certain the rear cylinder and the piston do not bind in the drum or on the dowel pins. Install large retaining ring (15) holding cylinder and assembled parts in place.

(c) Turn the drum assembly over and install the springs (12), forward disc (11), piston (10), new packings (7 and 8) and the front cylinder (5).

(d) Install bearing (9) in turbine shaft (6). Place the entire assembly in an arbor press. Apply pressure on the turbine shaft, making certain the cylinder does not bind in the drum or on the dowel pins (21). Install retaining ring (1), lock plates (3) and screws (2). Install screws (4) to secure turbine shaft.

(e) Check to be certain the front cylinder is properly seated and release arbor press pressure.

(2) Assemble the output gear and shaft:

NOTE

Apply a coat of lubricant (OE/HDO) to all gears and bearings before installation.

(a) Position output gear (60, fig. 12-7) in transmission case and install output gear shaft

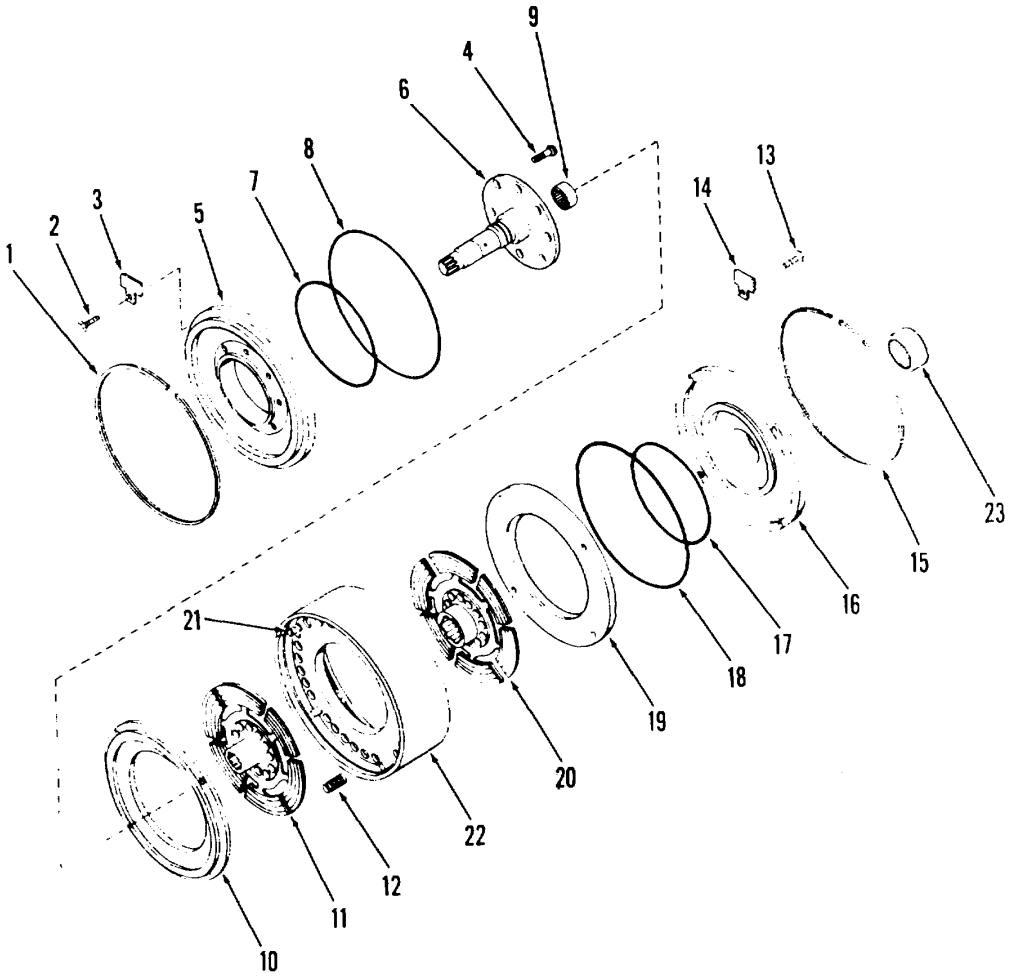

TA067495

1	Retaining ring	7	packing	13	Screw	19	Clutch piston
2	Screw	8	Packing	14	Lock plate	20	Reverse
3	Lock plate	9	Roller bearing	15	Retaining ring	21	Pin
4	place bolt	10	Clutch piston	16	Rear cylinder	22	Pressure plate
5	Front cylinder	11	Forward disc	17	Packing	23	Roller bearing
6	Turbine shaft	22	Return spring	18	Packing		

Figure 12-12. Forward and reverse clutch, disassembly and reassembly.

(57). Make certain output shaft is installed with internal splines toward rear of transmission case. (b) Install new oil seal (55), new gasket (54) and retainer (53) and secure with screws (52).

NOTE

When installing the bearing retainers on all shafts he certain to align match marks made during disassembly.

(3) Install idler gear and shaft:

(a) Position idler gear (51) in gear box and install thrust washer (47) and shaft (48) into idler gear (51).

(b) Install new gasket (46) and retainer (45). Install idler pin (44) and secure retainer to case with screws and lock washers (43).

NOTE

Make certain the machined reliefs in the idler shaft retainer are positioned down so that the oil in the cap will drain into the case.

(4) Install reverse gear and shaft:

(a) Position reverse gear (42) in the tranmission case and install shaft (37) with bearings and retaining rings assembled.

(b) Install retaining rings (33 and 39) and make certain they are properly seated.

(c) Install retainer (35) and secure with screws and lock washers (34).

(d) Install new packings (36) if they were removed.

(5) Install forward gear and shaft:

(a) Assemble gear (32) on shaft (25) and secure to shaft with retaining ring (26).

(b) Install shaft into transmission case and assemble bearing (31) and retaining rings (29 and 30).

(c) Install new gasket (28) and retainer (27) and secure with screws (22) and lockwashers (23).

(6) Install new packings (14 and 15) on drum assembly. Install retainer (11) on the housing. Replace bearing (13), if removed and spacer (12).
Secure with screws (9) and lock washers (10). Install housing (8) on drum assembly turbine shaft. Use care so as not to damage collector rings.

(7) Attach a hoisting chain to the converter housing and maneuver housing so that turbine shaft will be properly engaged as the drum and housing are attached to the transmission case. Install screws (3 and 4) and lock washers (5) and tighten securely.

(8) Install new gasket. Align pump index marks and install the pump (fig. 12-6) on the turbine shaft. Secure with mounting screws.

(9) Position the converter in the pump at the back of the transmission, making certain that the converter hub tangs properly engage the pump.

(10) Refer to paragraph 12-8 and install control valve. Install elbow (2) and connect tube assembly (1) to control valve and converter housing.

(11) Install oil level gage (68) and plugs (64, 65, 66 and 67). Install screen (63), spring (62) and pipe plug (61). Install ball (19), spring (18), washer (17), and seat (16) in converter housing.

b. Illustration. Refer to paragraph 2-27 and install the transmission.

12-13. Transmission Pressure Test

a. Preparation.

(1) Refer to TM 10-3930-630-12 and remove floor and toe plates. Check transmission oil level. Oil must be at FULL mark on level gage.

(2) Use a suitable hoist or jacks and raise the front of the truck until both drive wheels clear the floor. Place blocks under truck to hold in this position.

(3) Attach a tachometer to accurately record engine speed.

(4) Operate truck and transmission until transmission oil temperature reaches 120° to 140° F. (48.9 to 60.0C).

b. Pressure Test.

(1) Remove plug and install a pressure gage (O to 300 psi) (O to 2067 kPa) in mainline pressure tap (fig. 12-13).

(2) Place transmission control in forward position and operate engine at 600 rpm. Mainline pressure must read 45-70 psi (310.2 to 482.6 kPa). Reading must be a steady value within the pressure range for all pressure checks.

(3) Operate engine at 2000 rpm. Mainline pressure must read 130 to 150 psi (896.2 kPa).

(4) Place transmission in neutral and remove pressure gage from mainline pressure tap and install gage in converter charge pressure tap (fig. 12-13).

(5) Place transmission control in forward position. Operate engine at 600 rpm. Pressure gage must read 32 to 65 psi (220.6 to 448.1 kPa).

(6) Operate engine at 2000 rpm. Pressure gage must read 80 to 105 psi (551.5 to 723.8 kPa).

(7) Place transmission in neutral position. Remove pressure gage from converter charge pressure tap and install gage in forward clutch pressure tap (fig. 12-13).

(8) Place transmission control in forward position. Operate engine at 600 rpm. Pressure gage must read 32 to 65 psi (220.6 to 448.1 kPa).

(9) Operate engine at 2000 rpm. Pressure gage must read 80 to 105 psi (551.5 to 723.8 kPa).

(10) Place transmission in neutral position. Remove gage from forward clutch pressure tap and install gage in reverse clutch pressure tap (fig. 12-13).

(11) Place transmission control in forward position. Operate engine at 600 rpm. Pressure gage must read 32 to 65 psi (220.6 to 448.1 kPa).

(12) Operate engine at 2000 rpm. Pressure gage must read 80 to 105 psi (551.5 to 723.8 kPa).

(13) Place transmission in neutral. Shut down engine. Remove gage from transmission. Install floor and toe plates (TM 10-3930-630-12).

(14) Remove blocking and lower drive wheels to the floor.

c. Test Results. Check results listed above. If the transmission does not operate within the listed pressure range, repair or replace transmission as detailed above.

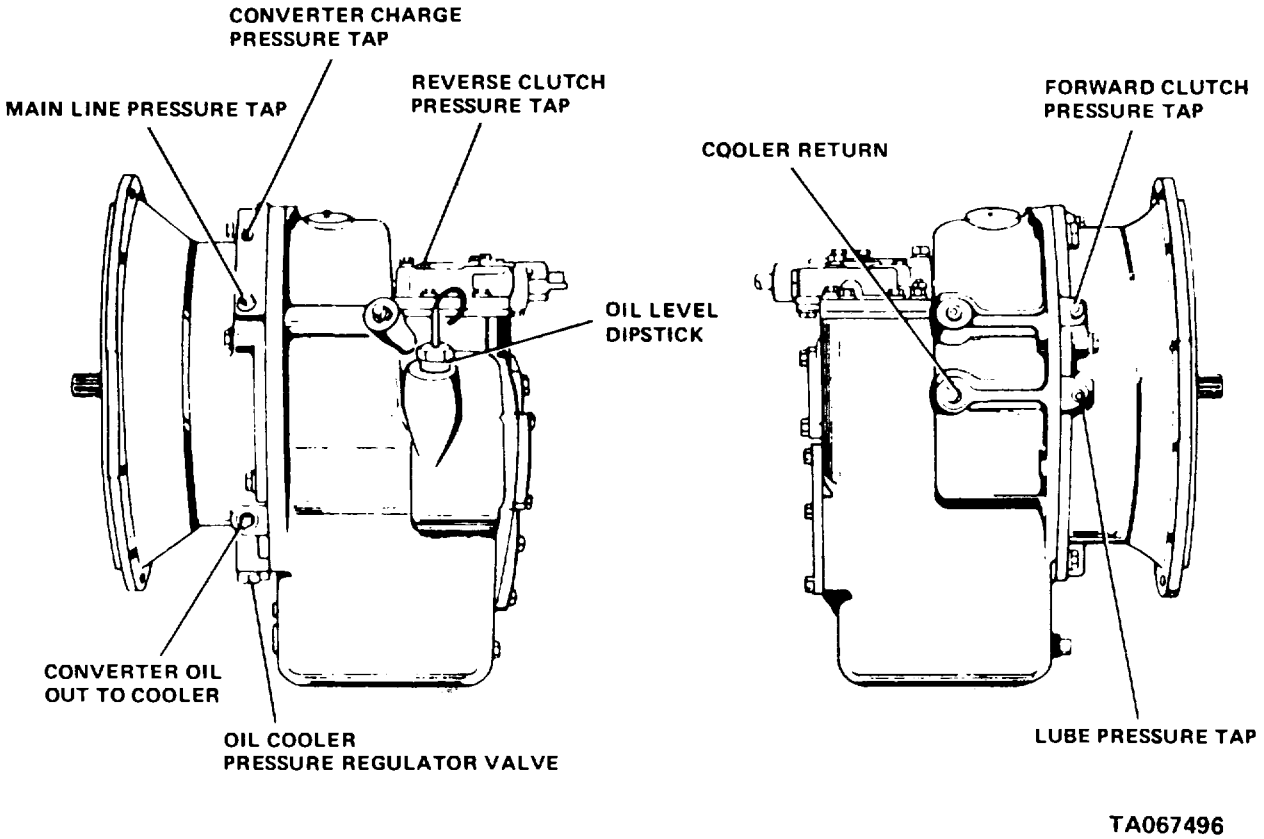

Figure 12-13. Transmission pressure tap port locations.

APPENDIX A
REFERENCES

A-1. Publication Indexes

The following indexes should be consulted frequently for latest changes or revision, and for new publications relating to material covered in this technical manual.

Military Publications:

DA Pam 108-1	Index of Army Motion Pictures and Related Audio-Visual Aids
DA Pam 310-1	Index of Administrative Publications
DA Pam 310-2	Index of Blank Forms
DA Pam 310-3	Index of Doctrinal Training and Organizational Publications
DA Pam 310-4	Index of Technical Manuals, Technical Bulletins, Supply Manuals (Types 7, 8 and 9) Supply Bulletins, and Lubrication Orders
DA Pam 310-6	Index of Supply Catalogs and Supply Manuals (excluding Types 7, 8 and 9)

A-2. Forms

Refer to TM 38-750, The Army Maintenance Management System (TAMMS), for instructions on the use of maintenance forms pertaining to the material.

A-3. Painting

TM 43-0139	Painting Instructions for Field Use
TB 43-0209	Color, Marking, and Camouflage Painting of Military Vehicles, Construction Equipment, and Materials Handling Equipment.

A-4. Radio Interference Suppression

TM 11-383	Radio Interference Suppression

A-5. Maintenance

TB 750-C-1	Use of Antifreeze Solutions and Cleaning Compounds in Engine Cooling System
TM 9-214	Inspection, Care and Maintenance of Anti-firiction Bearings
TM 9-207	Operation and Maintenance of Ordnance Materiel in Cold Weather (0° to -65° F) (TO 36-1-40)
TM 9-6140-200-12	Operator's and Organizational Maintenance Manual for Lead-Acid Storage Batteries
TM 10-3930-630-12	Operator and Organizational Maintenance Manual: Truck, Lift, Fork, GED, Solid Rubber Tired Wheels, 4000 lb. Capacity, 100 and 180 Inch Lift, Army Models MHE-231, Allis Chalmers Models ACC40-24PS100 and ACC40-24PS180 (NSN 3930-00-590-7814) (100 in.) (NSN 3930-00-556-4955) (180 in.)
TM 10-3930-630-20P	Direct Support and General Support Repair Parts and Special Tools List for Truck, Lift, Fork, GED, Solid Rubber Tired Wheels, 4000 lbs Capacity, 100 and 180 Inch Lift; Army Model 321, Allis-Chalmers Model ACC4-024PS100 and ACC40-24PA180
TM 10-3930-630-34P	Direct Support and General Support Repair Parts and Special Tools List (Including Depot Maintenance Repair Parts and Special Tools List) for Truck, Lift, Fork, GED, Solid Rubber Tired Wheels, 4000 lbs capacity, 100 and 180 in. lift, Army Model 231, Allis-Chalmers Model ACC40-24PS-100 (NSN 3930-00-590-7814) ACC 40-24PS180 (NSN 3930-00-556-4955)
TM 38-750	The Army Maintenance Management System (TAMMS)

A-6. Lubrication

C9100IL LO 10-3930-630-12	Fuels, Lubricants, Oils and Waxes Truck, Lift, Fork; 4000 Pound Capacity; Gasoline Engine Driven; Solid Rubber Tired Wheels Army Model MHE-231 (Allis Chalmers Models ACC 40-24PS100 and ACC 40-24PS180)

A-7. Shipment and Storage

TB 740-97-2	Preservation of USAMECOM Mechanical Equipment for Shipment and Storage
TM 740-90-1	Administrative Storage of Equipment

A-8. Fire Protection

TB 5-4200-20-10	Hand Portable Fire Extinguishers Approved for Army Users

INDEX

By Order of the Secretary of the Army:

BERNARD W. ROGERS
General, United States Army
Chief of Staff

Official:

J. C. PENNINGTON
Brigadier General, United States Army
The Adjutant General

Distribution:

To be distributed in accordance with DA Form 12-25A, Direct and General Support maintenance requirements for Warehouse.

*** U.S. GOVERNMENT PRINTING OFFICE: 1994 - 300-421/82188**

TEAR ALONG PERFORATED LINE

RECOMMENDED CHANGES TO EQUIPMENT TECHNICAL PUBLICATIONS

THEN. . JOT DOWN THE DOPE ABOUT IT ON THIS FORM, CAREFULLY TEAR IT OUT, FOLD IT AND DROP IT IN THE MAIL!

SOMETHING WRONG WITH THIS PUBLICATION?

FROM: (PRINT YOUR UNIT'S COMPLETE ADDRESS)

DATE SENT

PUBLICATION NUMBER	PUBLICATION DATE	PUBLICATION TITLE

BE EXACT. . .PIN-POINT WHERE IT IS

PAGE NO.	PARA-GRAPH	FIGURE NO	TABLE NO.

IN THIS SPACE TELL WHAT IS WRONG AND WHAT SHOULD BE DONE ABOUT IT:

PRINTED NAME, GRADE OR TITLE, AND TELEPHONE NUMBER

SIGN HERE:

DA FORM 1 JUL 79 2028-2

PREVIOUS EDITIONS ARE OBSOLETE.

P.S.—IF YOUR OUTFIT WANTS TO KNOW ABOUT YOUR RECOMMENDATION MAKE A CARBON COPY OF THIS AND GIVE IT TO YOUR HEADQUARTERS.

This fine document...

Was brought to you by me:

Liberated Manuals -- free army and government manuals

Why do I do it? I am tired of sleazy CD-ROM sellers, who take publicly available information, slap “watermarks” and other junk on it, and sell it. Those masters of search engine manipulation make sure that their sites that sell free information, come up first in search engines. They did not create it... They did not even scan it... Why should they get your money? Why are not letting you give those free manuals to your friends?

I am setting this document FREE. This document was made by the US Government and is NOT protected by Copyright. Feel free to share, republish, sell and so on.

I am not asking you for donations, fees or handouts. If you can, please provide a link to liberatedmanuals.com, so that free manuals come up first in search engines:

<A HREF=http://www.liberatedmanuals.com/>Free Military and Government Manuals</A>

- Sincerely
  Igor Chudov
  http://igor.chudov.com/
- Chicago Machinery Movers