TM 10-3930-620-34

DEPARTMENT OF THE ARMY TECHNICAL MANUAL

TECHNICAL MANUAL

DIRECT AND GENERAL SUPPORT

MAINTENANCE MANUAL

TRUCK, LIFT, FORK,

SOLID RUBBER TIRED WHEELS,

6000 LB CAPACITY, 180 INCH LIFT

(ALLIS CHALMERS MODEL FE-60-EE)

(ARMY MODEL MHE-214)

FSN 3930-479-8769

HEADQUARTERS, DEPARTMENT OF THE ARMY
SEPTEMBER 1971

SAFETY PRECAUTIONS

BEFORE OPERATION

1. Check logbook to insure lift truck has been properly serviced.
2. When servicing battery, do not smoke or use flame producing devices as batteries generate a highly explosive hydrogen gas.
3. Do not splash battery acid on hands, face. or eyes as acid will cause severe burns on contact. Splash affected area immediately, using clean water or a solution of water and baking soda.
4. Check working area to insure that area is free of obstructions and cleared of all nonessential personnel.
5. Check that fire extinguisher is installed.

DURING OPERATION

1. Drive carefully to prevent injury to personnel or damage to material or equipment.
2. Insure that sufficient overhead and side clearance is available.
3. Travel with lift truck mast tilted fully-backward and forks raised just high enough above the ground to clear uneven surface conditions.
4. Reduce lift truck speed when making a turn or in congested areas.
5. Operator will avoid sudden starting or stopping of lift truck.
6. Check cargo before loading to insure rated load capacity of lift truck is not exceeded and that cargo can be moved safely.
7. Insure that cargo is properly stacked before lifting operation.
8. Insure that cargo is positioned against carriage backrest for safer travelling.
9. Operator will face in the direction lift truck is traveling and remain alert to prevent accidents.
10. Lift truck will be operated in reverse gear w hen moving bulky cargo, especially when operator's forward vision is obstructed.
11. Lift truck will be operated in reverse gear when descending a ramp or incline if cargo is loaded on fork.
12. When unloading multi-stacked cargo, slowly lower cargo directly over specific storage location as far as possible before tilting mast forward.
13. Use extreme care when multi-stacking cargo.
14. Do not use lift truck forks or rear end to, bump or butt cargo.
15. Cease operations and report any malfunction or abnormalities found while operating lift truck to proper authority.

AFTER OPERATION

1. Insure that forks are firmly positioned on the ground.
2. Insure that key switch is in the OFF position, remove key .
3. Insure that parking brake is functioning and preventing movement.
4. If lift truck is to be parked on an incline, place wheel chocks, forward and aft of front wheels.

CHANGE

No. 2

HEADQUARTERS
DEPARTMENT OF THE ARMY
WASHINGTON, D.C., 10 August 1989

Direct and General Support Maintenance Manual

TRUCK, LIFT, FORK, ELECTRIC, SOLID RUBBER TIRED WHEELS,
6000 LB. CAPACITY, 180-INCH LIFT
(ALLIS CHALMERS MODEL FE-60-EE)
(ARMY MODEL MHE-214)
NSN 3930-00-479-8769

TM 10-3930-620-34, 9 September 1971, is changed as follows:

Cover and title page (page i). The manual title is changed to read as shown above.

Page 1-1.
Paragraph 1-1 is superseded as follows:

1-1. Scope

a. This manual contains instructions for the use of Direct and General Support maintenance personnel maintaining the Truck, Lift, Fork, Electric, Solid Rubber Tired Wheels, 6000 lb. Capacity, 180-Inch Lift, Allis Chalmers Model FE-60-EE, Army Model MHE-214, National Stock Number 3930-00-479-8769 as allocated by the Maintenance Allocation Chart in TM 10-3930-620-12. It provides information on the maintenance of the equipment which is beyond the scope of the tools, equipment, personnel, or supplies normally available to the using organization.

b. Appendix A contains a list of references and Appendix B contains the Maintenance Allocation Chart. These appendices are located in TM 10-3930-620-12. The Repair Parts and Special Tools Lists for Unit, Intermediate Direct Support, Intermediate General Support, and Depot Maintenance facilities are contained in TM 10-3930-620-24P.

Paragraph 1-2 is superseded as follows:

1-2. Forms and Records

a. Maintenance forms, records, and reports which are to be used by maintenance personnel at all maintenance levels are listed in and prescribed by DA Pam 738-750.

b. You can help improve this manual. If you find any mistakes or if you know of a way to improve the procedures, please let us know. Mail your letter or DA Form 2028 (Recommended Changes to Publications and Blank Forms) direct to: Commander, U.S. Army Tank-Automotive Command, AMSTA-MB, Warren, MI 48397-5000. A reply will be furnished to you.

Page 1-2. Paragraph 1-4*i.* Subparagraphs (*i.1*) and (*i.*2) are added as follows:

(i.1) Recommended Battery.

Lead-acid type..... NSN 6140-00-789-3725
Lead-acid type..... NSN 6140-00-900-6284
Nickel-iron type ..... NSN 6140-00-901-1056

(i.2) Recommended Battery Charger.

Combination type (Lead-
acid, Nickel-iron) ..... NSN 6130-01-047-1351

Page 2-1. Paragraph 2-1, change "TM 10-3930-620-35P" to "TM 10-3930-620-24P".

Any other references within the manual to "TM 10-3930-620-35P", "TM 10-3930-620-20P", or "TM 10-3930-620-34P" are changed to "TM 10-3930- 620-24P".

By Order of the Secretary of the Army:

CARL E. VUONO
General, United States Army
Chief of Staff

Official:

WILLIAM J. MEEHAN II
Brigadier General, United States Army
The Adjutant General

DISTRIBUTION:

To be distributed in accordance with DA Form 12-25F, Direct Support and General Support maintenance requirements for Fork Lift, 6000 LB Capacity, Solid Tire, Electric (Model MHE-214).

PIN: 028311-002

Change No. 1

HEADQUARTERS
DEPARTMENT OF THE ARMY
Washington, DC *13 May 1974*

Direct and General Support Maintenance Manual

TRUCK, LIFT, FORK; ELECTRIC; SOLID RUBBER TIRED WHEELS;

6,000 LB. CAPACITY; 180-INCH LIFT (ALLIS-CHALMERS

MODEL FE-60-EE, ARMY MODEL MHE-214) FSN 3930-479-8769

TM 103930-62034, 9 September 1971, is changed as follows:

Foldout figure 3-1. Figure 3-1 is superseded.

By Order of the Secretary of the Army:

CREIGHTON W. ABRAMS
General, United States Army
Chief of Staff

Official:

VERNE L. BOWERS
Major General, United States Army
The Adjutant General

Distribution:

To be distributed in accordance with DA Form 12-25A, (qty rqr block No. 895) Direct and General Support maintenance requirements for Warehouse Equipment

U.S. GOVERNMENT PRINTING OFFICE : 1982 0 - 392-230

TECHNICAL MANUAL

No. 10-3930-620-34

HEADQUARTERS,
DEPARTMENT OF THE ARMY
WASHINGTON, D.C., *9 September 1971*

DIRECT AND GENERAL SUPPORT MAINTENANCE MANUAL

TRUCK, LIFT, FORK, SOLID RUBBER TIRED WHEELS,

6000 LB CAPACITY, 180 INCH LIFT

(ALLIS CHALMERS MODEL FE-60-EE)

(ARMY MODEL MHE 214)

FSN 3930-479-8769

LIST OF ILLUSTRATIONS

CHAPTER 1
INTRODUCTION

Section I. GENERAL

1-1. Scope

a. This manual contains instructions for the use of Direct Support and General Support Maintenance personnel maintaining the Truck, Lift, Fork, Solid Rubber Tired Wheels, 6000 Pound Capacity, 180 Inch Lift, Allis Chalmers Model FE-60-EE, Army Model MHE-214, Federal Stock Number 3930-479-8769 as allocated by the Maintenance Allocation Chart. It provides information on the maintenance of the equipment which is beyond the scope of the tools, equipment, personnel, or supplies normally available to the using organization.

b. The appendix contains a list of references. TM 10-3930-620-12 contains the maintenance allocation chart. The list of repair parts required by direct and general support, and by depot maintenance facilities for support of the equipment is contained in TM 10-3930-620-35P.

1-2. Forms and Records

a. The DA forms and records used for equipment maintenance will be only these prescribed in TM 38-750.

b. Reporting of errors, omissions, and recommendations for improving this publication by the individual user is encouraged. Reports should be submitted on DA Form 2028 (Recommended Changes to Publications) and forwarded direct to Commanding General, U. S. Army Mobility Equipment Command, ATTN: AMSME-MPP, 4300 Goodfellow Boulevard, St. Louis, Mo. 63120.

Section II. DESCRIPTION AND DATA

1-3. Description

A general description of the fork lift truck and information pertaining to the identification plates are contained in TM 10-3930-620-12. More detailed descriptions of specific assemblies and components are contained in the applicable section(s) and maintenance paragraphs of this manual.

1-4. Tabulated Data

This paragraph contains all maintenance data pertinent to direct support, general support, and depot maintenance personnel.

a. Distributor.

Manufacturer ..... Allis Chalmers
Model FE-60-EF
U.S. Army Registration Numbers ..... 10669388 thru 10669518

b. Operating data.

Capacity ..... 6000 lbs
Load center ..... 24 in.
Outside turning radius ..... 79 in.
Speed range ..... 1 mph min

c. Lift data.

Lift type ..... 2 telescoping cylinders
Forward tilt ..... 3 deg
Backward tilt ..... 8 deg
Free lift ..... 69 in.
Maximum lift height ..... 180 in.
Lowest fork position ..... Floorline
Lift speed, loaded ..... 33 fpm
Lift speed, empty ..... 51 fpm

d. Fork data.

Length ..... 40 in.
Width ..... 5 in.
Center-to-center spacing between forks ..... 6 in. to 32 in.

e. Wheel and tire data.

Number of wheels 4
Number of drive wheels 2
Number of steerable wheels 2
Tires ..... Solid rubber, cushion type

f. Underclearance.

At axle ..... Drive 8 1/2 in.
Steer ..... 5 1/2 in.
At mast ..... 3 1/2 in.
At truck center ..... 6 in.

g. Gradeability.

Maximum grade, loaded ..... 15 pet
Maximum grade, empty ..... 15 pet

h. Capacities.

Hydraulic oil reservoir ..... 7.56 gal.
Hydraulic oil system, useable ..... 7.10 gal.
Brake system, complete ..... 0.3 pint

i. Battery data.

Battery ..... Lead-acid or nickel-iron
Battery compartment width..... 39 3/4 in.
Battery compartment length ..... 30 13 / 16 in.
Battery compartment height ..... 25. in.
Connector ..... Two-pole plug and receptacle, type EC

i. Overall dimensions and weights. Refer to TM 10-3930-620-12 shipping dimensions.

Overall length ..... 92 in.
Overall width ..... 46 in.
Overall height ..... 87 in.
Net weight ..... 13050 lbs
Shipping volume..... 213.1 cu ft

CHAPTER 2
DIRECT SUPPORT AND GENERAL SUPPORT MAINTENANCE INSTRUCTIONS

Section I. REPAIR PARTS, SPECIAL TOOLS, AND EQUIPMENT

2-1. Direct Support, General Support and Depot Maintenance Repair Parts

Direct Support, General Support and Depot Maintenance repair parts are listed and illustrated in TM 10-3930-620-35P.

2-2. Special Tools and Equipment

No special tools or equipment are required to perform the repair operations described in this equipment publication.

Section II. TROUBLESHOOTING

2-3. General

This section provides information useful in diagnosing and correcting unsatisfactory operation or failure of the fork lift truck and its components. Malfunctions which may occur are listed in table 2-1. Each malfunction stated is followed by a list of the probable causes of the trouble. The corrective action recommended is described opposite the probable cause. Refer to figure 2-1 for the wiring diagram. The schematic diagram of the electrical system is in figure 3-1.

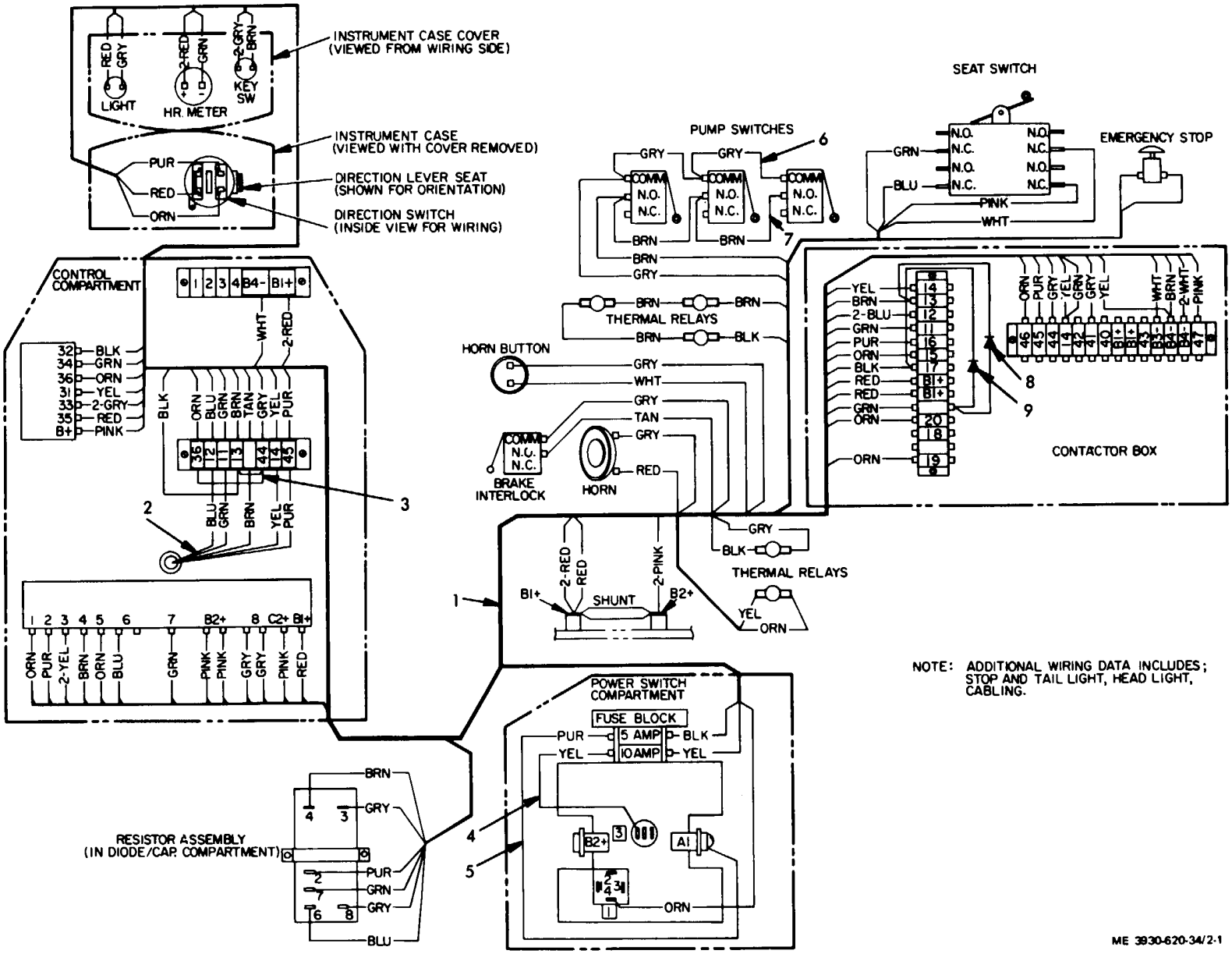

Figure 2-1. Wiring diagram.

Table 2-1. Troubleshooting

Malfunction	Probable Cause	Corrective Action
1. Directional contactors do not pull in when accelerator pedal is pressed.	a. Improperly positioned speed interlock.	a. Adjust speed interlock switch (para 3-6).
	b. Directional switch open.	b. Inspect and repair switch)para 3-12).
	c. Open in contactor, control relay, or direction interlock.	c. Inspect and repair (para 3-5).
	d. Protective circuit defective.	d. Test and replace circuit if necessary (para 3-11).
2. Directional contactors pull in when accelerator pedal is press ed but lift truck does not move.	a. Defective capacitor and diode assembly or resistor assembly.	a. Test and replace assembly if necessary (para 3-10).
	b. Control unit defective.	b. Test and replace if necessary (para 3-7).
	c. Bower switch assembly defective.	c. Test and repair or replace as necessary (para 3-9).
3. Inadequate power for climbing grades or moving loads	One or more defective sections in power switch assembly	Test and repair or replace assembly as necessary (para 3-9).
4. Hydraulic system inoperative	a. Overheated motor	a. Inspect and repair pump (para 3-24) or motor (para 3-25).
	b. Pump contactor open	b. Inspect and repair (para 3-5).
5. Brake pedal goes to floor.	a. Leaking master brake cylinder	a. Repair (para 3-32).
	b. Leaking wheel cylinder	b. Repair (para 3-31).
6. Harsh braking action or truck pulls to one side	Brake backing plate loose	Inspect and tighten if necessary (TM 10-393()-620-12).
7. Brake releases slowly	Dirt in master brake cylinder	Disassemble and clean (para 3-27).
8. Steering difficult-	a. Defective power steering cylinder	a. Inspect and repair cylinder (para 3-38).
	b. Defective power steering pump.	b. Inspect and repair pump (para 3-39).
	c. Bower steering contactor open	c. Inspect and repair (para 3-5).
	d. Power steering motor defective	d. Inspect and repair (para 3-40).
9. Fork carriage will not lift load.	a. Hydraulic pump defective	a. Inspect and repair (para 3-24).
	b. Lift cylinders defective	b. Inspect and repair cylinders (para 3-19 and 3-20).
	c. Hydraulic pump motor defective	c. Inspect and repair (para 3-25).
	d. Control valve defective	d. Inspect and repair (para 3-22).
10. Load creeps down from raised position.	a. Defective control valve	a. Inspect and repair valve (para 3-22).
	b. Defective lift cylinder.	b. Inspect and repair (para 3-19 and 3-20).
11. Lifting speed erratic	Bent or distorted mast assembly	Inspect and repair (para 3-27).
12. Control valve plungers will not return to neutral.	Defective control valve	Inspect and repair valve (para 3-22).
13. No operation of hydraulic system when first started up.	a. Defective hydraulic pump.	a. Inspect and repair hydraulic pump (para 3-24).
	b. Defective relief valve in control valve or control valve stuck.	b. Inspect and repair control valve plunger (para 3-24).
14. Slow operation of hydraulic system.	a. Defective hydraulic pump.	a. Inspect and repair hydraulic pump (para 3-24).
	b. Pump rpm too low.	b. Check pump motor operation. Overhaul pump motor if required (para 3-25).
	c. Improper operation of direction control valve due to defective Parts or foreign matter.	c. Inspect and repair control valve (para 3-22).
	d. Worn or scored lift cylinder packings.	d. Overhaul lift cylinder (para 3-19 and 3-20).
15. Noisy operation of hydraulic system.	a. Defective hydraulic pump.	a. Inspect and repair hydraulic pump (para 3-24).
	b. Chattering relief valve in control valve.	
16. Oil heats up rapidly.	a. Defective control valve.	b. Inspect and repair control valve (para 3-22).
	b. Defective hydraulic pump.	a. Inspect and repair hydraulic pump (para 3-24).

Malfunction	Probable Cause	Corrective Action
17. Hoist cylinder packing leaks.	Worn packings or piston scored.	Inspect and repair cylinder (para 3-19 and 3-20).
18. Hoist ,or tilt cylinder lowers or tilts while truck is idle.	a. Worn packing in lift cylinder or tilt cylinder. b. Defective control valve.	a. Inspect and repair cylinder (para 3-18, 3-19 and 3-20). b. Inspect and repair control valve (para 3-22).
19. Mast will not tilt.	a. Defective hydraulic pump. b. Defective control valve. c. Defective tilt cylinder.	a. Inspect and repair hydraulic pump (para 3-24). b. Inspect and repair control valve (para 3-22). c. Overhaul tilt cylinder (para 3-18).

Section III. GENERAL MAINTENANCE

2-4. General

Testing and servicing of mechanical, hydraulic and electrical units and assemblies are covered in their respective sections of this manual. Paragraph 2-5 contains the shutdown procedure that is related to many areas of maintenance.

2-5. Shutting Down Power for Maintenance

***Warning*: Be sure that power is always shut down for maintenance purposes in the following manner. Failure to do so might cause personal injury due to electrical shock or accidental movement of the truck.**

When performing any maintenance on the lift truck requiring a shutdown of power, proceed as follows:

a. Disconnect battery connector.

b. Turn the keyswitch on for a few seconds. This allows the' capacitors in the capacitor and diode assembly to discharge into the control system circuitry.

c. Turn off the keyswitch and remove the key.

Section IV. REMOVAL AND INSTALLATION OF MAJOR COMPONENTS AND AUXILIARIES

2-6. General

This section contains detailed instructions for removal and installation of assemblies and auxiliaries within the fork lift truck. Each major assembly is covered individually, with its component subassemblies, as a related series of instructions. In many cases a subassembly can be removed without removing or dismantling the major assembly. In this case, select only the applicable steps from the complete instructions for servicing the next higher assembly. Always tag or in some other manner identify such parts as hoses and wiring leads to facilitate reassembly. When possible, replace attaching parts such as nuts, bolts, flatwashers, lockwashers and clamps on the part they attach. This should prevent loss or misplacement.

2-7. Power Switch Assembly

a. Removal.

(1) Disconnect battery and discharge capacitors (para 2-5).

(2) Open the power switch cover (TM 10-3930-620-12).

(3) Remove the power switch assembly according to figure 2-2.

b. Installation.

(1) Install the power switch assembly according to the reverse of figure 2-2.

(2) Close the power switch cover (TM 10-3930-620-12).

(3) Reconnect battery connector.

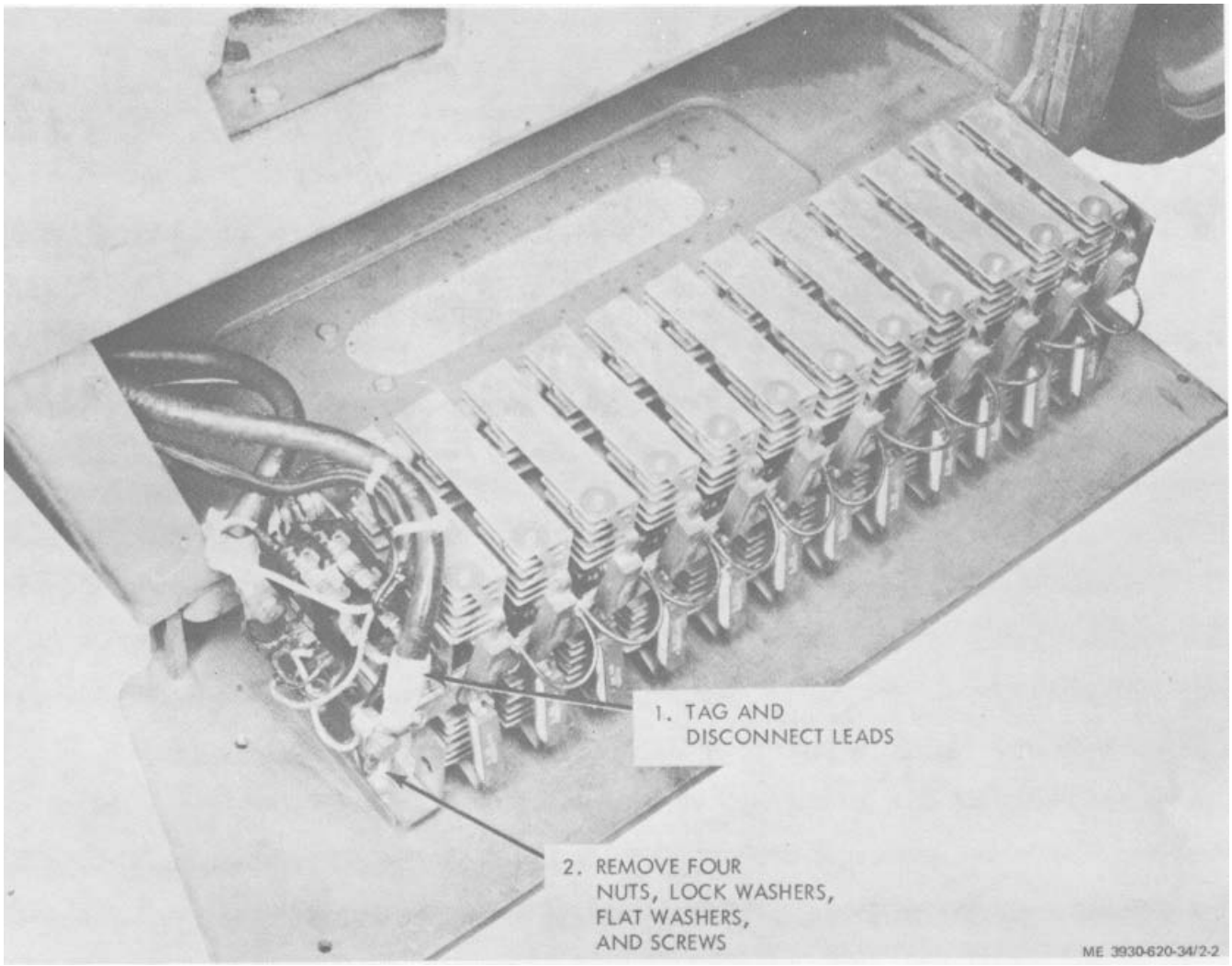

Figure 2-2. Power Assembly removal and installation.

2-8. Directional Control Switch

a. Removal.

(1) Remove the roll pin (1, fig. 2-3) and remove the lever (2).

(2) Remove the screw (3) and remove the lever end of the switch (4).

(3) Remove the two screws 15) and lift up the instrument case cover (6).

(4) Remove the directional control switch cover by taking out the two cover screws.

(5) Tag and disconnect switch wiring.

(6) Remove the four screws (7) and lock washers 18) and remove the switch.

b. Installation.

(1) Install the switch (9, fig. 2-3) on its mounting bracket using the four screws (7) and lock washers (8).

(2) With the switch cover off, reconnect wiring. Install the switch cover using the two cover screws.

(3) Position the instrument case cover (6) on the case and install the two screws (5).

(4) Position the lever end (4) on the switch and secure with the screw (3).

(5) Install the lever (2) and secure with the roll pin (1).

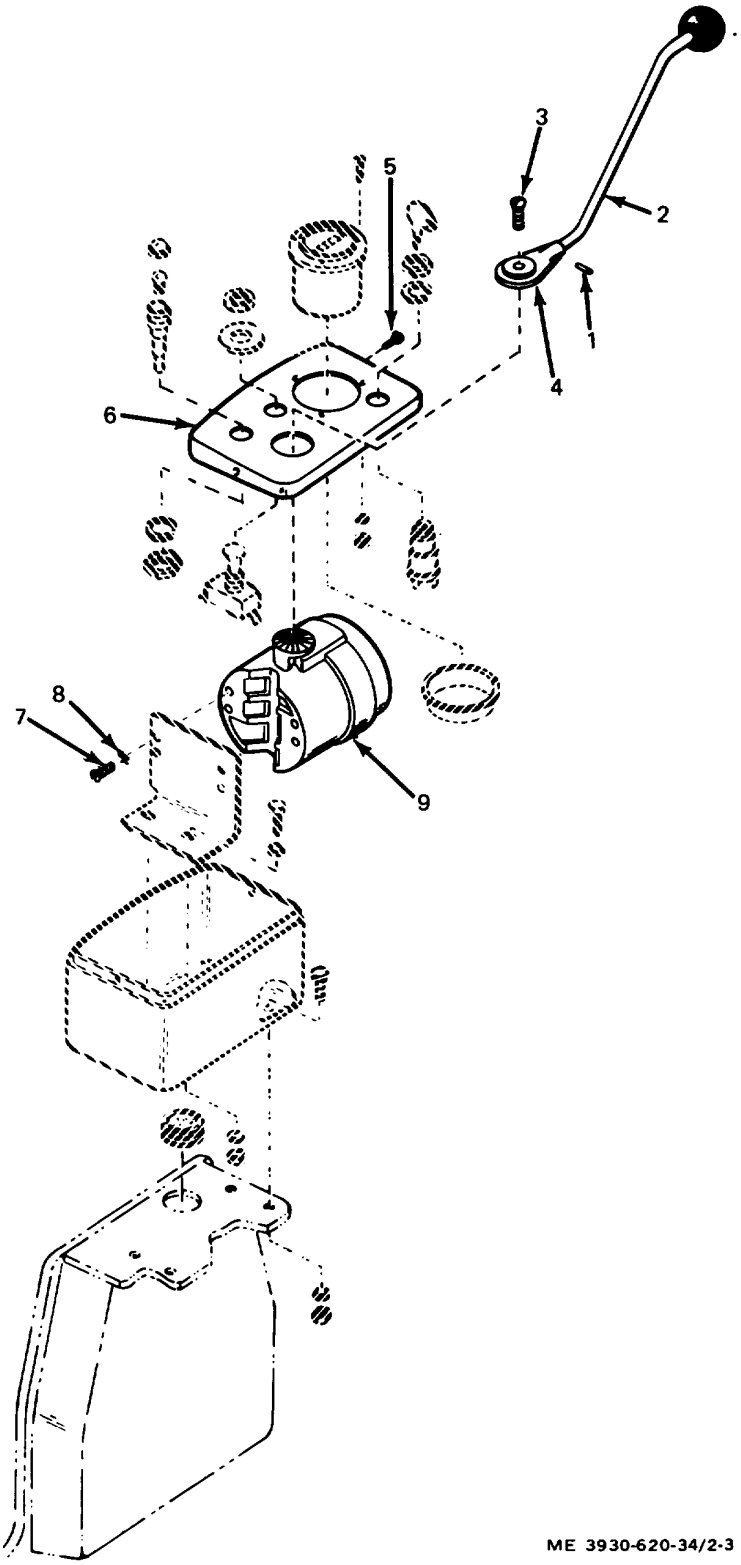

1. Roll pin
2. Lever
3. Screw
4. Lever end
5. Screw (2)
6. Cover
7. Screw 14)
8. Lock washer (4)
9. Directional switch body

Figure 2-3.. Directional control switch removal and installation.

2-9. Control Valve

a. Removal. (fig. 2-4).

(1) Disconnect battery and discharge capacitors (para 2-5).

(2) Remove control valve cover panel to gain access to control valve and connections (TM 10-3930-620-12).

(3) Identify and tag each hydraulic line according to where it connects.

(4) Disconnect hydraulic lines from control valve.

(5) Plug ends of hydraulic lines to prevent entry of foreign matter.

(6) Remove the three shoulder screws and nuts to disconnect yokes from control valve plungers.

(7) Remove the four control valve mounting screws, lock washers and nuts.

(8) Remove control valve from lift truck.

***Warning*: Use an approved cleaning solvent.**

(9) Clean exterior of control valve using an approved solvent.

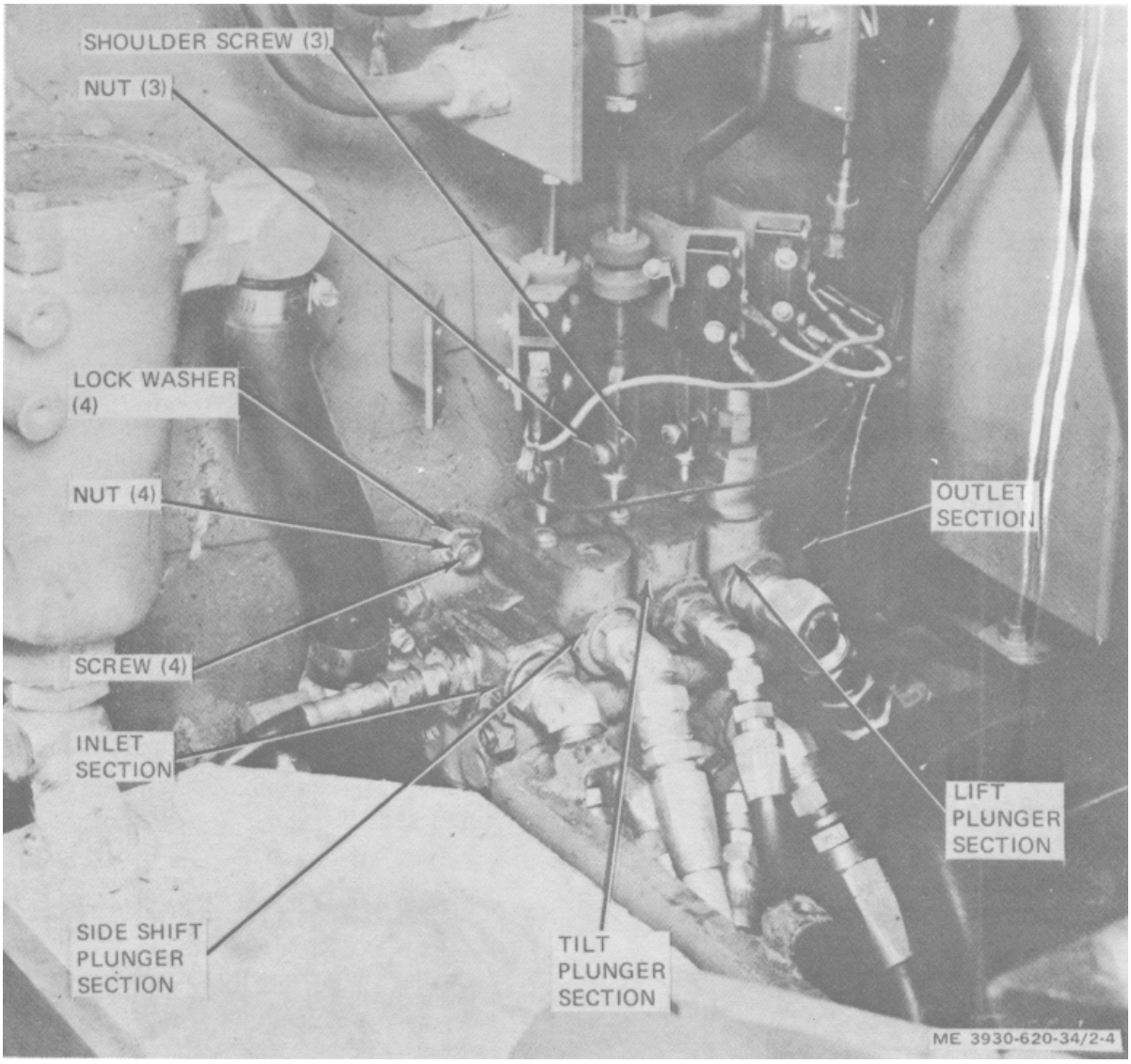

Figure 2-4. Control valve removal and installation.

b. Installation.

(1) Install control valve on lift truck center plate.

(2) Unplug all control valve openings and reconnect hydraulic lines to appropriate ports. (fig. 2-4).

(3) Connect yokes to control valve plungers. removal and installation.

(4) Check adjustments described in c, below,

c. Adjustment.

(1) Adjust lift plunger section relief valve as follows. (fig. 2-5.)

(a) Disconnect battery and discharge capacitors (para 2-5).

(b) access to control valve by removing floor plate and control valve cover.

(c) Connect a pressure gage into hydraulic line between the control valve and the outlet port of the primary hydraulic pump.

Note. Insure that pressure gage is calibrated for 2500 psi.

(d) Remove cap nut from adjusting screw and loosen locknut.

(e) directional control lever in neutral position.

(f) Connect battery connector and place key switch in ON position.

(g) Place and hold lift control lever in UP position until adjustment is completed.

(h) Turn adjusting screw in or out until 1900 psi is indicated on pressure gage.

(i) Secure adjusting screw in position using locknut.

(j) fork carriage and place lift control lever in N (neutral) position.

(k) an excessively heavy load on forks.

(l) Place and hold lift control lever in UP position and check that needle in pressure gage is indicating 1900 psi.

(m) Lower fork carriage and remove load.

(n) Disconnect battery and discharge capacitors (para 2-5).

(o) Install cap nut on adjusting screw.

(p) Remove pressure gage.

(q) Connect hydraulic line.

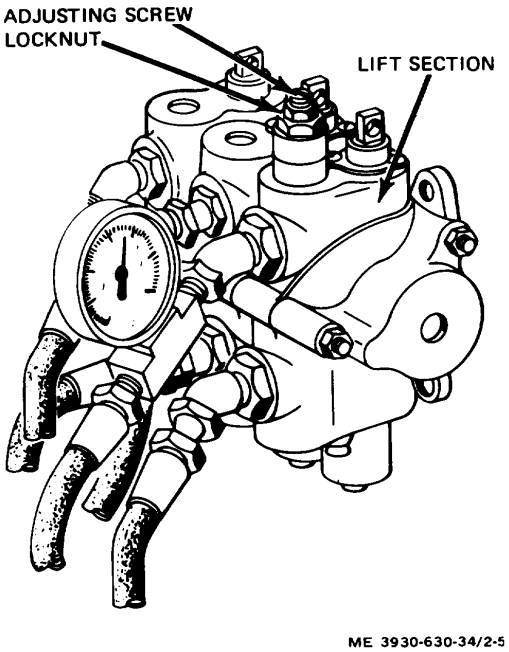

Figure 2-5. Lift plunger section relief valve adjustment.

(2) Adjust inlet section relief valve as follows. (fig. 2-6.)

(a) Disconnect battery and discharge capacitors (para 2-5).

(b) Gain access to control valve by removing floor plate and control valve cover.

(c) Connect a pressure gage into hose connection between the outlet port of the secondary hydraulic pump and the inlet port of the inlet section.

Note. Insure that pressure gage is calibrated for 2500 psi.

(d) Remove cap nut from adjusting screw and loosen locknut.

(e) directional control lever in neutral position.

(f) battery connector and place key switch in ON position.

(g) Place and hold tilt control lever in BACK position until adjustment is completed.

(h) Turn adjusting screw in or out until 2100 psi is indicated on pressure gage.

(i) adjusting screw in position using locknut.

(j) Tilt mast to vertical position and place tilt control lever in N (neutral) position.

(k) Place an excessively heavy load on forks.

(l) Place and hold tilt lever in BACK position and check that needle in pressure gage in indicating 2100 psi.

(m) Tilt mast to vertical position and remove load. (n) Disconnect battery and discharge capacitors (para 2-5).

(o) Install cap nut on adjusting screw.

(p) Remove pressure gage.

(q) Connect hydraulic line.

(r) Install control valve cover and floor plate.

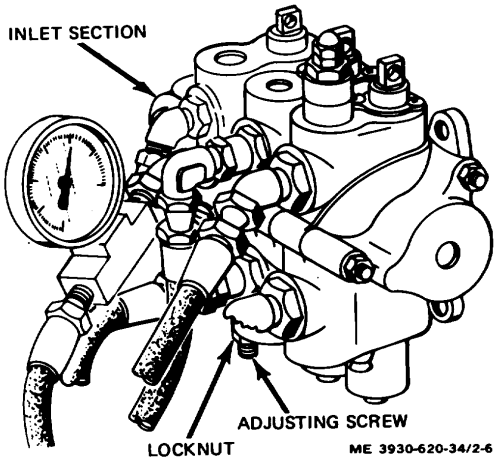

Figure 2-6. Inlet section relief valve adjustment.

2-10. Reservoir

a. Removal.

(1) Disconnect battery and discharge capacitors (para 2-5).

(2) Drain all oil from the reservoir.

(3) Tag and disconnect the hydraulic lines to the power steering pump, hydraulic pump, and the hydraulic oil filter.

(4) Tag and disconnect wires to thermal relays.

(5) Plug all lines to prevent dirt from entering the system.

(6) Remove the hydraulic oil filter.

(7) Remove the bolts that secure the reservoir to the truck, and lift out the reservoir.

b. Installation.

(1) Mount the reservoir to the truck and secure with bolts.

(2) Install the hydraulic oil filter.

(3) Unplug and connect hydraulic lines.

(4) Connect wires to thermal relays.

(5) Fill reservoir (TM 10-3930-620-12).

2-11. Steering Wheel, Column, and Gear

a. Removal.

(1) Disconnect battery and discharge capacitors (para 2-5).

(2) Remove floor plate and toe plate (TM 10-3930-620-12).

(3) Tag and disconnect hydraulic lines from the steering gear unit. (fig. 2-7)

(4) Plug all hydraulic lines to prevent dirt from entering the system.

(5) Disconnect horn leads.

(6) Remove the two nuts, lock washer, and screws securing steering gear unit to bracket.

(7) Remove steering wheel, column, and gear from lift truck.

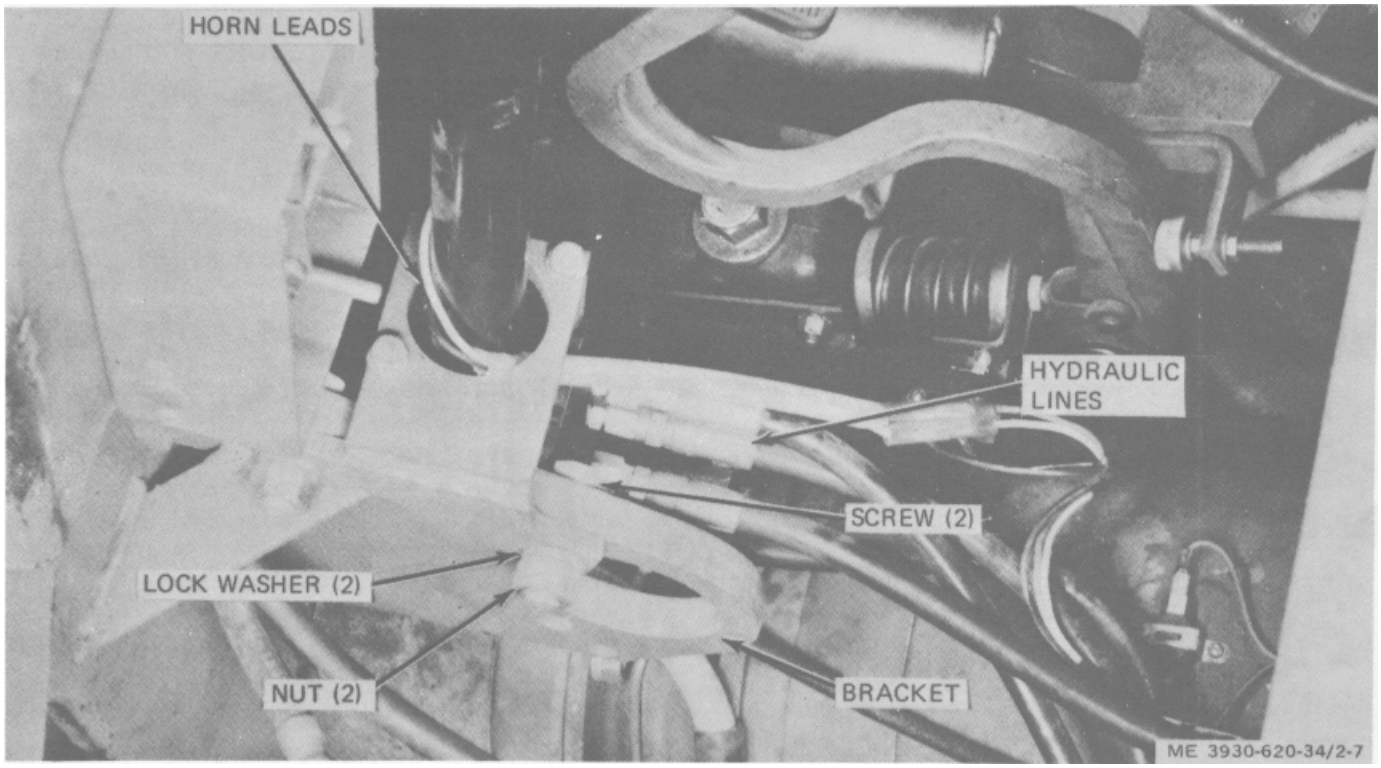

Figure 2-7. Steering wheel, column

b. Installation.

(1) Mount steering wheel, column, and gear using the two screws, lock washers, and nuts. (fig. 2-7.)

(2) Connect horn leads.

(3) Unplug and connect hydraulic lines.

2-12. Power Steering Pump

a. Removal.

(1) Disconnect battery and discharge capacitors (para 2-5).

(2) Install wheel chocks forward and aft of front wheels to prevent lift truck from moving.

(3) Using a suitable lifting device, raise front end of lift truck above the ground, as required.

(4) Install blocking and remove lifting device.

(5) Tag and disconnect hydraulic inlet and outlet lines from power steering pump. (fig. 2-8.)

(6) Plug ends of both hydraulic lines to prevent dirt and other foreign matter from entering hydraulic system.

(7) Remove screws and lock washers securing power steering pump to pump motor.

(8) Remove power steering pump and coupling from pump motor.

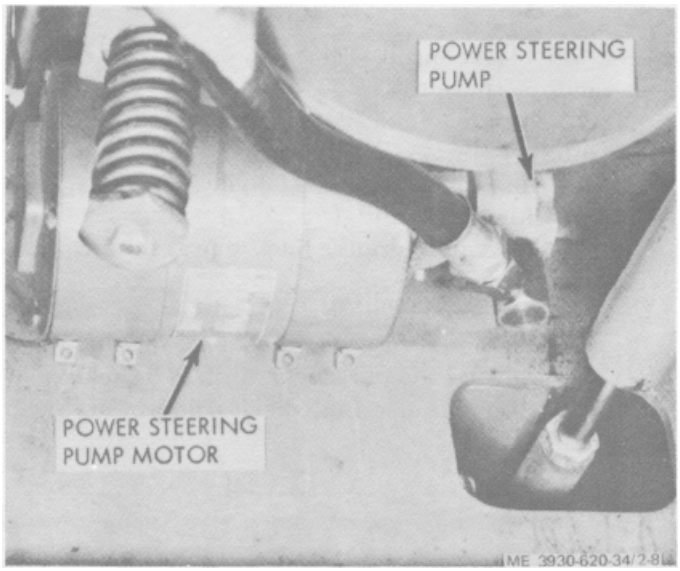

Figure 2-8. Power steering pump and motor.

b. Installation.

Note. In addition to serving as lubrication for coupling, grease will hold coupling in position while attaching pump to pump motor.

(1) Apply a thin coating of no. 2 wheel bearing grease to power steering pump coupling and install coupling on motor. (fig. 2-8.)

(2) Secure power steering pump to pump motor using screws and lock washers.

(3) Remove plugs from ends of hydraulic lines.

(4) Connect hydraulic lines to power steering pump.

c. Adjustment. Testing and adjustment of hydraulic system relief pressure is as follows:

(1) Obtain a pressure gauge incorporating a full-scale indication of 2000 psi or higher.

(2) Using a tee fitting, install pressure gauge in the high pressure line at the outlet port of hydraulic pump or in the high pressure input line to power steering gear unit.

(3) Apply weight to operator's seat.

(4) Place directional control lever in N (neutral) position, if required.

(5) Place key switch in ON position.

(6) Rotate steering wheel until steer wheels are against the mechanical stops.

Note. Hydraulic system relief valve is adjusted to unseat at 1150 ± 100 psi.

(7) While observing pressure gauge, rotate steering wheel and check indication on gauge.

(8) If a momentary deflection of the needle on the gauge is observed at 1150 ± 100 psi, relief valve is adjusted properly.

(9) If a momentary deflection of the needle on the gauge is observed before or after 1150 ± 100 psi, perform steps (10) through (131 to adjust relief valve.

(10) Remove cap nut located on power steering pump body.

(11) Using a screwdriver, rotate adjusting screw clockwise to increase hydraulic system relief pressure or counterclockwise to decrease system relief pressure.

(12) Rotate steering wheel and check that a momentary deflection of the needle on the gauge occurs at 1150 ± 100 psi.

(13) Reinstall cap nut and tighten securely.

(14) Remove tee fitting and pressure gauge from hydraulic pump.

(15) Connect hydraulic line to hydraulic pump.

(16) Perform operational check of hydraulic system and check for oil leakage.

(17) Place key switch in OFF position.

2-13. Power Steering Pump Motor

a. Removal.

(1) Disconnect battery and discharge capacitors (para 2-5).

(2) Raise the lift truck and block it in position.

(3) Remove thermal relay (TM 10-3930-620-12).

(4) Tag and disconnect cables to pump motor. (fig. 2-8.)

(5) Remove screws and lock washers securing pump to pump motor.

(6) Remove screws and lock washers securing pump motor to truck frame.

b. Installation.

(1) Position pump motor on truck frame and secure with screws and lock washers.

(2) Lubricate power steering pump drive shaft end with a coat of grease per LO 10-3930-620-12.

(3) Position pump on motor and secure with screws and lock washers.

(4) Reconnect cables to pump motor.

(5) Install thermal relay (TM 10-3930-620-12).

2-14. Hydraulic Pump

a. Removal. The hydraulic pump is attached to the hydraulic pump motor located on the right side of the lift truck. Remove hydraulic pump from lift truck as follows. (fig. 2-9.)

(1) Disconnect battery and discharge capacitors (para 2-5).

(2) Install wheel chocks forward and aft of rear wheels to prevent lift truck from moving.

(3) Using a suitable lifting device, raise front

end of lift truck above the ground, as required.

(4) Install blocking and remove lifting device.

Note. If hydraulic oil is to be reused, insure that hydraulic oil is drained into a clean container.

(5) Remove drain plug from suction fitting in reservoir and allow hydraulic oil to drain into container.

(6) Disconnect hose connections from hydraulic pump.

(7) Plug hoses to prevent dirt or other foreign matter from entering hydraulic system.

(8) Remove screws and lock washers securing pump to motor housing.

(9) Pull pump shaft from armature shaft.

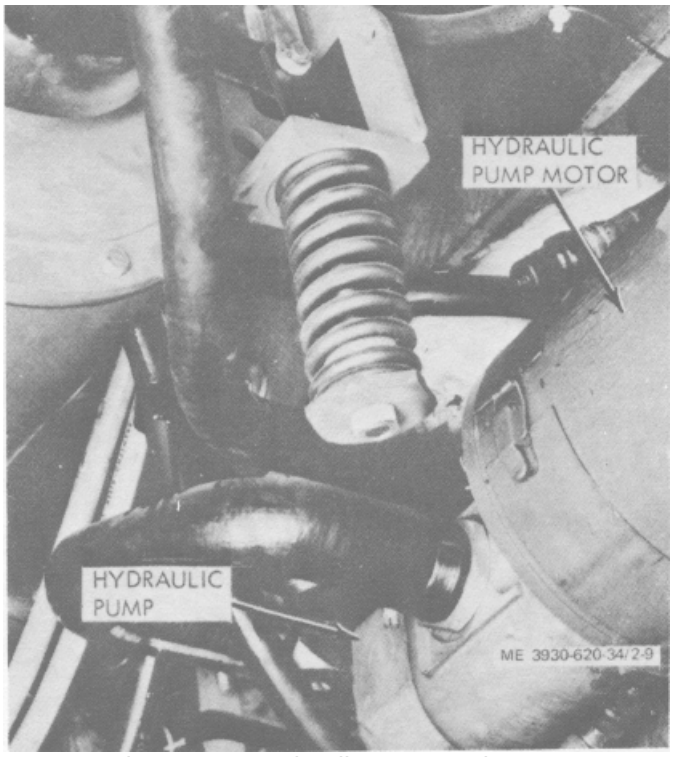

Figure 2-9. Hydraulic pump and motor.

b. Installation.

(1) drive gear splines of pump into splines in armature shaft of motor.

(2) Secure pump to motor housing using lock washers and screws.

(3) Remove plugs from ends of hydraulic lines and connect hydraulic lines to hydraulic pump.

(4) Install lifting device and remove blocking.

(5) Remove lifting device.

(6) Fill reservoir (TM 10-3930-620-12).

(7) Connect battery connector. While sitting on operator's seat, place key switch in ON position.

(8) Perform operational check of hydraulic system and insure that lifting and tilting operations are smooth.

2-15. Hydraulic Pump Motor

a. Removal. (fig. 2-9.)

(1) Disconnect battery and discharge capacitors (para 2-5).

(2} Remove toe and floor plates (TM 10-3930-620-12)

(3) Tag and disconnect wiring to motor.

(4) Remove drain plug from hydraulic oil reservoir and allow hydraulic oil to drain into container.

Note. If hydraulic oil is to be reused, insure that hydraulic oil is drained into a clean container.

(5) Install wheel chocks forward and aft of rear wheels to prevent lift truck from moving.

(6) Using a suitable lifting device, raise front end of lift truck above the around, as required.

(7) Install blocking and remove lifting device.

(8) Tag and disconnect hose connections from pump.

(9) Plug hoses to prevent dirt or other foreign matter from entering hydraulic system.

(10) Position a floor jack under pump motor.

(11) Remove screws securing mounting brackets to lift truck frame.

(12) Carefully lower pump motor and remove from under lift truck.

***Warning*: Use an approved cleaning solvent. Wear suitable eye protection when using compressed air.**

(13) Clean exterior of pump motor using an approved solvent. Dry thoroughly using com- pressed air.

(14) Remove screws and lock washers securing pump to motor housing.

b. Installation (fig. 2-9.)

(1) Slide drive gear splines of pump into splines in armature shaft of motor.

(2) Secure pump to motor housing using lock washers and screws.

(3) Use floor jack to position motor under lift truck.

(4) Use screws to secure motor mounting brackets to lift truck frame. Remove floor jack.

(5) Unplug and connect hoses to pump.

(6) Install lifting device and remove blocking.

(7) Remove lifting device.

(8) Fill reservoir (TM 10-3930-620-12).

(9) Reconnect wiring.

(10) Install toe and floor plates (TM 10-3930-620-12).

(11) Connect battery connector. While sitting on operator's seat, place key switch in ON position.

(12) Perform operational check of hydraulic system and insure that lifting and tilting operations are smooth.

2-16. Carriage and Backrest Assembly

a. Removal.

(1) Remove the forks (TM 10-3930-620-12).

(2) Remove the carriage lifting chains.

(3) Attach a hoist to the carriage and lift up out of the mast assembly.

b. Bearing adjustment. (fig. 2-10)

(1) Using an inside spanning tool, locate the narrowest point in the web of the inner mast assembly. Set an outside spanning tool to match the inside spanning tool. Lock tools in position.

(2) Using the outside spanning tool, span the carriage bearings at their maximum camber points. Add shims as necessary to produce a maximum clearance of 0.015 inch.

(3) Place a straightedge against the stud centerline to all three bearings on both sides of the carriage. No gap should appear between the bearings and the straightedge.

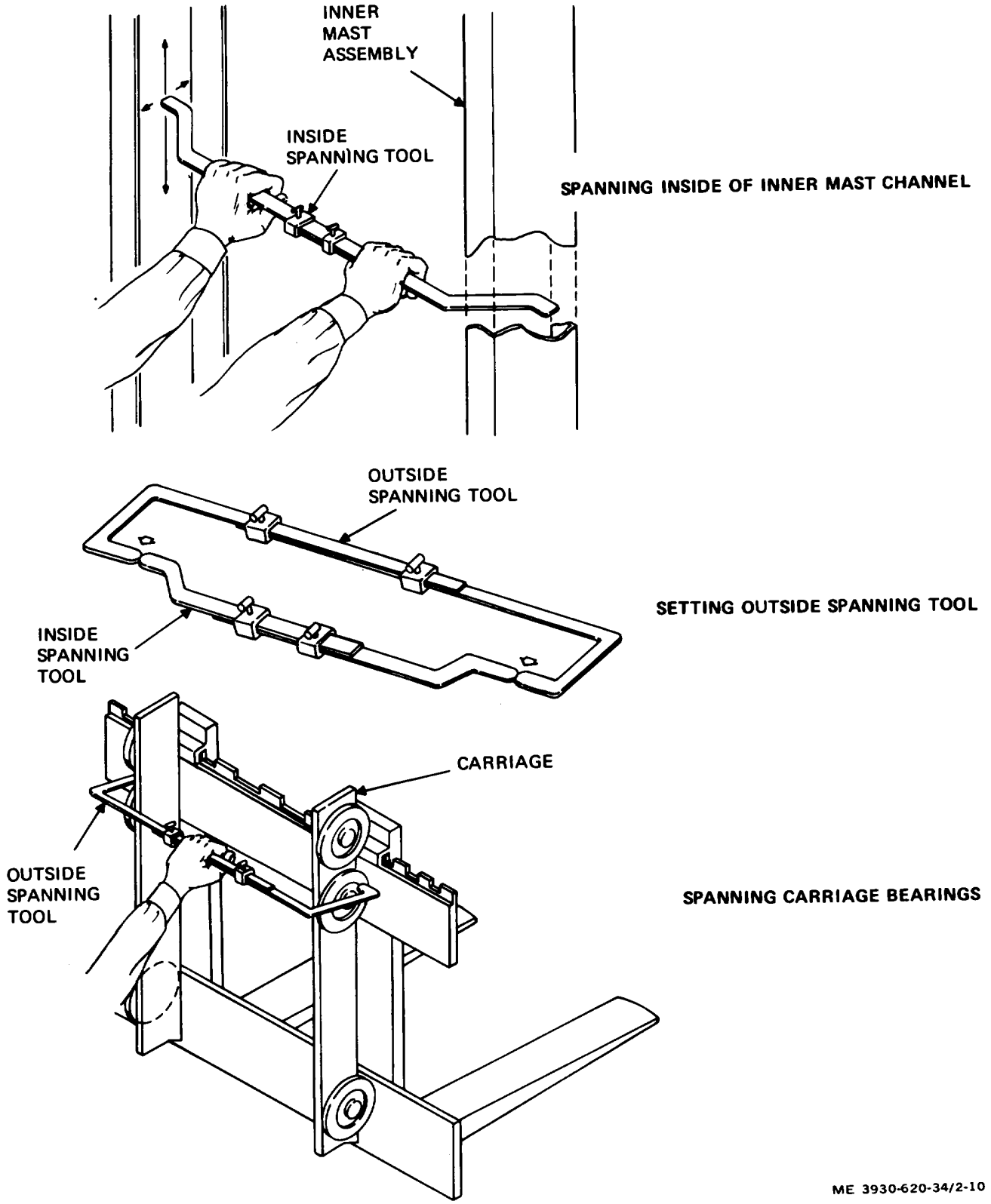

Figure 2-10. Carriage bearing adjustment.

c. Installation. Install the carriage and backrest assembly in the reverse order of removal.

2-17. Primary Lift Cylinder

a. Removal.

(1) Lower the fork carriage and remove the carriage and backrest (para 2-16).

(2) Free the end of the cylinder (7, fig. 2-11) of its lift chains (TM 10-3930-624-12).

(3) Remove the bleed screw (1) and insert a high pressure air hose. With the lift control lever held in the DOWN position, blow the oil out of the cylinder back into the reservoir.

(4) Disconnect the high pressure hose.

(5) Disconnect hydraulic lines to the cylinder. Cap or plug openings.

(6) Remove the nut (2) securing the lower end of the cylinder to the mast assembly.

(7) Remove the screws (3) and washers (4) securing the upper end and take off the guard (5) and crosshead (6).

***Caution*: Be careful not to damage the cylinder when removing it from the mast assembly.**

(8) Attach a chain securely around the outer case of the cylinder below the chain bolt flanges and remove the cylinder.

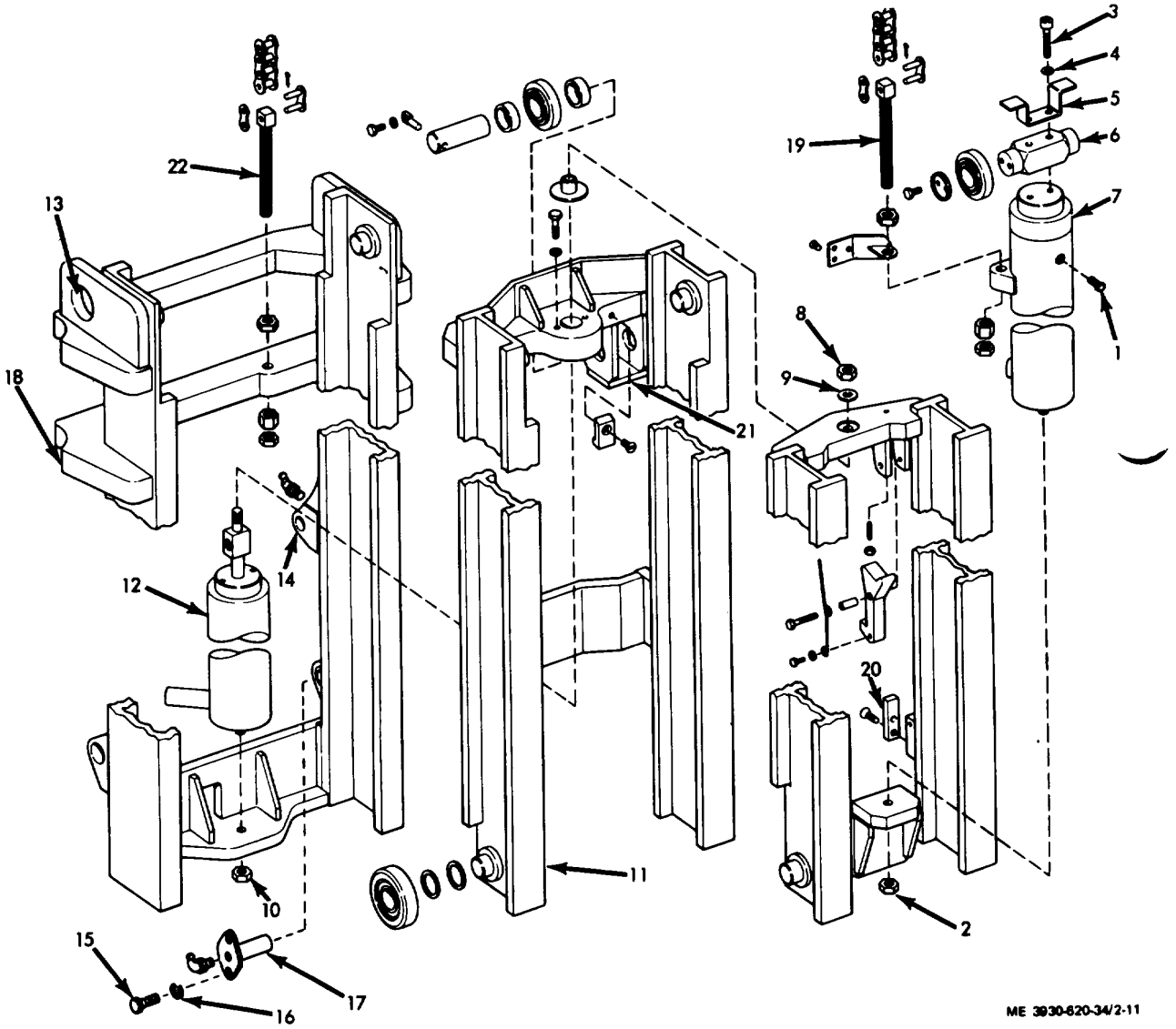

1. Bleed screw
2. Nut
3. Screw 121
4. Washer 12)
5. Guard
6. Crosshead
7. Primary lift cylinder
8. Nut
9. Washer
10. Nut
11. Intermediate mast
12. Secondary lift cylinder
13. Lifting eye (2)
14. Tilt cylinder mast bracket (2)
15. Screw (4)
16. Lock washer 14)
17. Pivot pin (2)
18. Outer mast
19. Chain adjustment bolt l2'
20. Stop
21. Crosshead support
22. Chain adjustment bolt (2)

Figure 2-11. Mast assembly.

b. Installation.

(1) Attach a chain securely around the cylinder below the chain bolt flanges. Install the cylinder (7, fig. 2-11) in the mast assembly.

(2) Secure the cylinder to the mast with the nut (2) at the bottom.

(3) Install the screws (3) with washers, (4) through the guard (5) and crosshead (6) into the cylinder.

(4) Attach lift chains to the cylinder (TM 10-3930-624-12).

(5) Install the carriage backrest (para 2-16).

(6) Unplug and reconnect all hydraulic lines to the cylinder.

(7) When the cylinder assembly has been installed, run the lift to the extreme upper limit, then open the bleed screw (1) one or two turns. Allow the trapped air and foamy oil to run out. When a clear stream of oil appears, tighten the bleed screw.

2-18.. Secondary Lift Cylinder

a. Removal.

(1) Remove the primary lift cylinder (para 2-17).

(2) Tag and disconnect hydraulic lines to the secondary lift cylinder (12, fig. 2-11). Cap or plug openings.

(3) Remove the nut (8) and washer (9) securing the upper end of the cylinder to the mast assembly.

(4) Remove the nut (10) securing the lower end of the cylinder.

(5) Use a chain hoist to lift the intermediate mast (11) approximately six inches and block in place.

(6) Carefully remove the secondary lift cylinder.

b. Installation.

(1) Place the secondary lift cylinder (12, fig. 2-11) into the mast assembly.

(2) Use a chain hoist on the intermediate mast (11) to remove the block. Lower the mast into place on the secondary lift cylinder.

(3) Secure the cylinder to the mast assembly with the nut (10) at the bottom and the washer (9) and nut (8) at the top.

(4) Unplug and connect the hydraulic lines to the cylinder.

(5) Install (and bleed) the primary lift cylinder (para 2-17).

2-19. Mast Assembly

a. Removal.

(1) Lower mast fully.

(2) Remove the carriage and backrest assembly (para 2-16).

(3) Disconnect hydraulic lines to the primary and secondary lift cylinders (7 and 12, fig. 2-11.) Cap or plug openings.

(4) Attach a chain hoist to the lifting eyes (13) on the back of the outer mast (181 and raise the mast assembly enough to take the weight off the pivot pins (17).

(5) Detach the tilt cylinder from the mast brackets (14).

(6) Remove the screws (15), lock washers (16), and pivot pins (17).

(7) Lift the mast assembly free from the truck.

b. Installation.

(1) Hoist the mast assembly into position on the truck.

(2) Install the pivot pins (17, fig. 2-11), lock washers (16), and screws (15) which secure the mast to the frame.

(3) Connect the tilt cylinders to the mast brackets (14), install the lift chains, and adjust the tilt cylinders (TM 10-3930-620-12).

(4) Connect hydraulic lines to the primary and secondary lift cylinders (7 and 12).

(5) Install the carriage and backrest assembly (para 2-16).

(6) Lubricate g-ease fittings as instructed in current Lubrication Order LO 10-3930-620-12.

(7) Operate the mast through several cycles. Remove the bleed screw (1) and bleed the system until air-free oil flows out the opening.

(8) Check the oil level in the hydraulic tank and add oil as necessary.

(9) Adjust the lift chains (subpara c).

c. Mast and Carriage Chain Adjustment.

(1) Carriage chain adjustment. Lower the carriage to its lowest point of travel. The bottom of the carriage lower bar should be 3.0 to 3.5 inches from the floor. Adjust the chain adjustment bolts (19, fig. 2-11) as necessary.

(2) Mast chain adjustment. Slowly extend the mast to its maximum height. Measure the clearance between the stop (20, fig. 2-11) on the inner mast and the crosshead support (21) on the intermediate mast. The clearance should be I/32 to 1/64 inch. Adjust chain adjustment bolts (22) as required.

Note. Ensure that chains are adjusted to equal tension.

2-20. Drag Link Assembly

a. Removal. (fig. 2-12.)

(1) Disconnect battery and discharge capacitors (para 2-5).

(2) Using a suitable lifting device, raise rear end of lift truck.

(3) Install blocking and remove lifting device.

(4) Loosen adjusting plug in pivot arm end of drag link.

(5) Remove drag link from pivot arm ball stud.

(6) Loosen locknut and unscrew drag link stud. from power steering cylinder plunger rod.

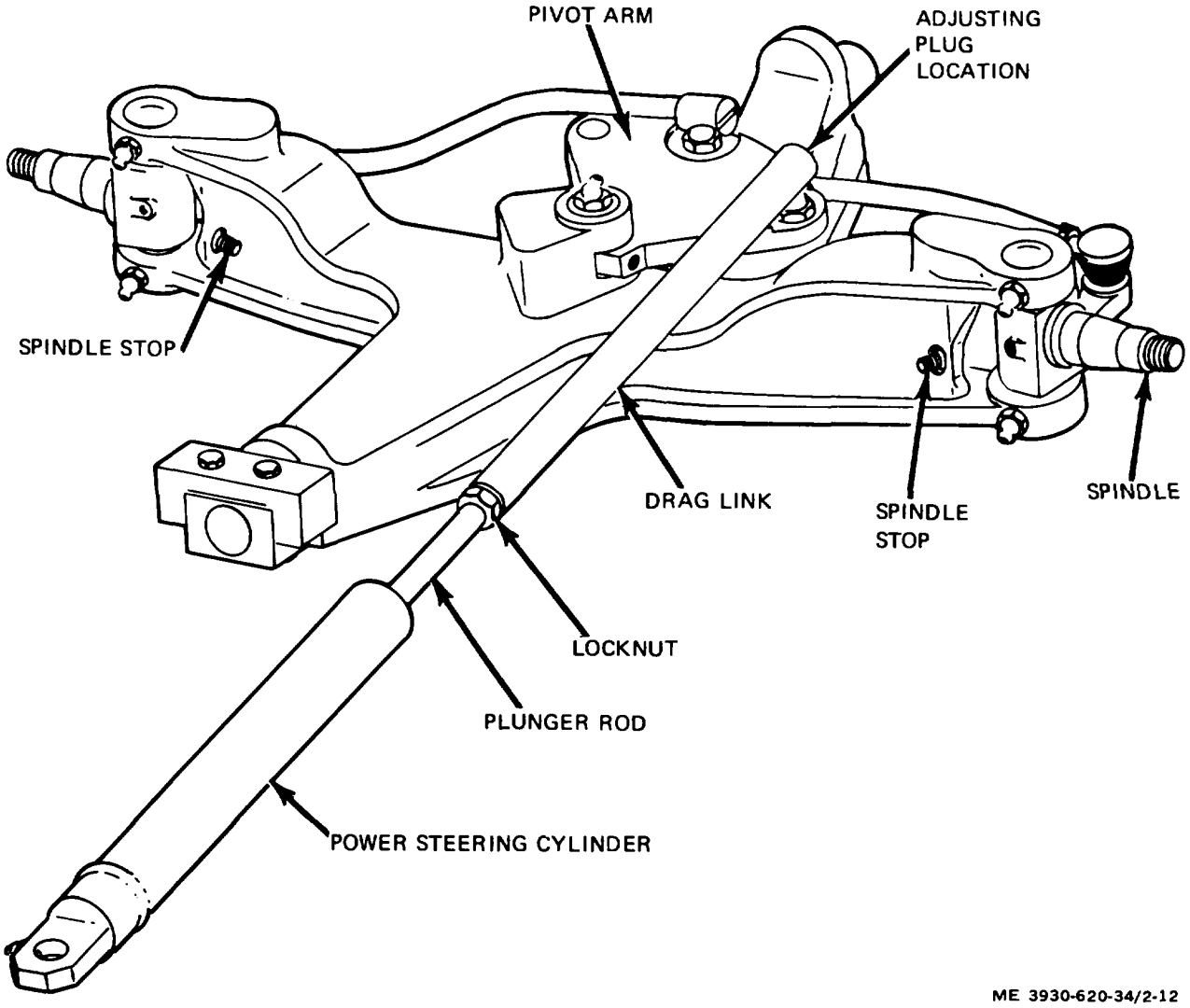

Figure 2-12. Drag link removal and installation.

b. Installation and Adjustment. (fig. 2-12.)

(1) Position steer wheels in a straight ahead position (parallel with side of lift truck).

(2) Set the power steering cylinder plunger rod half way out of the cylinder.

(3) Screw the drag link onto the plunger rod far enough to install the drag link socket onto the ball on the pivot arm.

(4) Tighten the locknut.

(5) Tighten the adjusting plug just enough to prevent end play.

(6) Secure adjusting plug in position with cotter pin.

(7) Check that both wheel spindles contact spindle stops to prevent bottoming of piston in power steering cylinder. If necessary, adjust by loosening locknut and moving plunger rod in or out.

(8) Install lifting device and remove blocking.

(9) Lower lift truck.

2-21. Steer Axle

a. Removal.

(1) Disconnect battery and discharge capacitors (para 2-5).

(2) Remove toe and floor plates (TM 10-3930-620-12)

(3) Remove drag link (para 2-20).

Note. Make sure blocking will not interfere with removal of the steer axle.

(4) Place a suitable jack under the steer axle.

Raise the jack enough to take the stress from the axle mounting screws.

(5) Remove the screws and lock washers securing axle mounting housing to truck frame.

(6) Lower the axle from under the truck.

b. Installation. Install the steer axle in the reverse order of removal. Make steering adjustments (TM 10-3930-620-121.

2-22. Drive Motor

a. Removal. The drive motor can be removed with or without the drive axle assembly. To remove only the motor, proceed as follows.

(1) Disconnect battery and discharge capacitors (para 2-5).

(2) Remove toe and floor plates (TM 10-3930-620-12).

(3) Disconnect brake line at interconnecting tee and remove brake line bracket attached to drive motor flange.

(4) Tag and disconnect drive motor cabling.

(5) Remove yoke pin from seat brake actuating lever and remove screws securing seat brake bracket assembly to drive motor housing.

(6) Place a transmission jack, or suitable device, under the drive motor. Raise jack enough to support motor.

(7) Drain differential housing oil and if oil is to be reused, make certain a clean receptacle is used.

(8) Remove nuts securing motor to carrier.

(9) Check all lines, hoses, cables, wires, and linkage to make certain none will be damaged during removal.

Caution: Make certain shims between motor and carrier are not damaged when removing motor. When assembling motor to carrier, shims must be in the same order and position as when motor was removed.

(10) Carefully separate motor housing from carrier. Carrier will remain with drive axle.

(11) Attach hoist securely to front of truck frame and raise truck carefully, making certain all lines, hoses, cables, wires, and linkage stay clear of the motor. Raise enough to allow the drive motor to be moved from under the truck.

(12) Carefully pull motor out from under truck.

***Caution*: When cleaning with a solvent, always use in a well ventilated area.**

(13) Clean exterior with a solvent such as mineral spirits. Dry with compressed air.

b. Installation. Install the drive motor in the reverse order of removal.

2-23. Drive Motor and Drive Axle

a. Removal. To remove the drive motor and drive axle as a unit, proceed as follows.

(1) Remove mast assembly (para 2-19).

(2) Disconnect battery and discharge capacitors (para 2-5).

(3) Remove toe and floor plates (TM 10-3930-620-12).

(4) Disconnect brake line at interconnecting tee and remove line from master cylinder. Remove brake line bracket attached to drive motor flange.

(5) Tag and disconnect drive motor cabling.

(6) Remove yoke pin from seat brake actuating lever and remove screws securing seat brake bracket assembly to drive motor housing.

(7) Place a transmission jack, or suitable device, under the drive motor and drive axle. Raise jack enough to support motor and axle assembly.

(8) Remove screws securing drive unit to truck frame.

(9) Check all lines, hoses, cables, wires, and linkage to make certain none will be damaged during removal.

(10) Attach hoist securely to front of truck frame and raise truck carefully, making certain all lines, hoses, cables, wires, and linkage stay clear of the motor and axle assembly. Raise enough to allow the assembly to be moved from under the truck.

(11) Carefully pull assembly out from under truck.

***Caution*: When cleaning with a solvent, always use in a well ventilated area.**

(12) Clean exterior with a solvent such as mineral spirits. Dry with compressed air.

(13) Drain differential housing oil. If oil is to be reused, drain into a clean receptacle.

(14) Remove screws and nuts securing motor to carrier and drive unit housing.

Caution: Make certain shims between motor and carrier are not damaged when removing motor. When assembling motor to carrier, shims must be in the same order and position as when motor was removed.

(15) Carefully separate motor housing from carrier and remove motor from assembly. Carrier will remain on drive unit studs.

b. Installation. Install the drive motor and axle in the reverse order of removal.

CHAPTER 3
REPAIR INSTRUCTIONS

Section I. ELECTRICAL SYSTEM

3-1. Description of Pulse Width Modulation

a. Pulse width modulation is a method of providing stepless acceleration through control of drive motor power. This control is achieved by supplying the motor with pulses of power. Supplying power in pulses provides controlled regulation of the power flow from the battery. The regulation of power flow from the battery permits the system to operate at peak efficiency (near 100 %). The power flow is controlled by a smoothly variable speed control.

b. The lift truck is powered by a direct current motor which is driven by pulses occuring at a 120 per second rate. The regularity of the pulses, their fast rate, and the inertia of the motor provide smooth operation.

3-2. Schematic Diagram Description (fig. 3-1.)

a. General. Battery power is continually connected to the horn and lights circuits and to the seat switch contacts through the emergency cutout contactor. If the seat is occupied and emergency stop switch released, the switch contacts are closed and the emergency cutout (EC) contactor is energized. The EC contacts close and apply power through the 400 ampere and 35 ampere fuses, enabling operation of the truck.

Figure 3-1 Electrical system schematic diagram.
(Located in back of manuals)

b. Emergency Cutout. Should an emergency arise where it is necessary to cut power, the emergency stop pushbutton on the contactor unit cover is depressed. This de-energizes the EC contactor, thus opening the EC contacts. This removes power from all but the emergency cutout circuit.

c. Operating Power. When the key is inserted and turned in the control panel, the key switch contacts close to apply operating power to several circuits, as follows:

(1) Hydraulic pump (P) contactor.

(2) Power steering pump contactor (PS).

(3) Control relay (CR), forward (F) contactor, and reverse (R) contactor.

(4) Power on lamp.

(5) Protective circuit and control unit. The resistor assembly provides load resistances for transistor stages within the control unit.

d. Hydraulic Pump Motor. The hydraulic pump motor is kept off except when one of the three hydraulic control levers (lift, tilt, or side shift) is operated. Operation of a lever closes the associated microswitch contacts, thereby energizing the hydraulic pump (P) contactor. This closes the P contacts to energize the hydraulic pump motor. Thermal relays are mounted on the hydraulic pump motor and reservoir. Should the system overheat, the circuit to the P contactor is opened to de-energize the hydraulic pump motor.

e. Power Steering Pump Motor. The power steering pump contactor (PS is energized whenever the seat is occupied and the key switch is turned on. This closes the PS contacts, causing the power steering pump motor to operate. A thermal relay, mounted on the motor, opens if the motor overheats. This de-energizes the PS contactor and thereby interrupts power to the motor.

f. Direction Control.

(1) With either the forward (F) or reverse (R) direction selected with the directional control switch, a circuit is completed to energize the control relay (CR). Assuming forward operation, the circuit is through the closed contacts of the speed interlock switch, the normally closed CR contacts, the CR coil, a diode of the bridge block, and the directional control switch. The switch terminates at terminal 35 of the protective circuit, which provides a voltage close to battery positive as long as the circuit does not detect a failure.

(2) When the accelerator pedal is depressed, the speed interlock switch contacts are allowed to return to normal. The F contactor is energized through terminal 12, a pair of now-closed CR contacts, the normally closed speed interlock switch contacts, the brake interlock switch and the directional control switch. This operates one pair of F contacts at the drive motor field winding. The winding is thus connected to carry current in the forward direction. The brake interlock switch opens when the brake is depressed. This prevents application of drive power and braking at the same time.

g. Speed Interlock. The speed interlock switch prevents the truck from being started at a high motor

speed and therefore prevents excessive surge currents. With the accelerator pedal at normal (up), the speed interlock switch contacts are held actuated as shown in the schematic diagram. This permits normal operation. With the accelerator pedal depressed, the contacts become normalled and the operate path to the control relay is open.

h. Direction Interlock. The direction interlock contacts on the forward and reverse contactors prevent both contactors from being energized at the same time. Assuming an initial forward direction and a switch to reverse, the collapsing field of the F coil creates a current through the coil and its parallel diode, keeping the contactor energized momentarily. The F interlock contacts keep the circuit to the R contactor open at this time. When current has diminished sufficiently in the F coil, the contactor releases, allowing the path to be completed to the R contactor.

i. Key Switch Bypass. The key switch is connected in parallel with two pairs of normally open direction selector contacts. As long as a direction is selected and the accelerator pedal is depressed, this prevents the key switch from being used to turn off power. If the key switch is turned off, power is not removed until the directional control lever is moved to the neutral position or the accelerator pedal is released. This protects against a loss of bias voltage to the power switch until the directional contactor has been de-energized.

j. Control Unit. The control unit provides controlling voltages for the power switch assembly, monitors available battery voltage for an undervoltage condition, and monitors drive current consumption for an overcurrent condition.

(1) With a direction selected, the setting of the speed potentiometer determines the voltage provided at control unit terminal 5. This in turn determines the width of the drive pulses supplied at terminal 3. The transistors of the power switch assembly are on during each drive pulse,(-5 volt input). The transistors are kept off in the absence of a drive pulse (+3 volt input) by the bias voltage provided at terminal 1. This voltage is approximately +5 volts dc with respect to battery positive.

(2) The control unit senses battery voltage between terminal 8 and B2+ . If the battery voltage between these points drops to about 24 volts, the drive pulses are cut off until voltage is restored.

(3) Drive motor current for the truck is through the current sensing shunt. The voltage developed across the shunt is monitored by the control unit between B2+ and B1 +. If the current becomes excessive, the control unit cuts off drive pulses. The current is sensed with each pulse so that normal operation is restored when the overcurrent condition is removed.

k. Drive Power Circuit. The drive motor operates when the power switch assembly transistors are turned on by the pulses from the control unit. The direction of motor operation is determined by the direction of current in the drive motor field winding. The schematic diagram shows one transistor circuit of a single power switch module. Each module contains two circuits. There are twelve such modules in the power switch assembly, making a total of twenty-four circuits. These are connected in parallel in order to handle the high current required by the drive motor.

l. Capacitor and Diode Assembly.

(1) During the off time of the power switch assembly, the collapsing magnetic field of the drive motor field winding tends to induce a current through the motor armature in the proper direction. Diode DI acts as a free-wheeling diode to pass this current. This keeps average drive motor current at a higher level than average battery current.

(2) When the power switch assembly cuts off after each drive pulse, there is a brief period before diode D1 can sustain the motor conduction. During this period diode D3 conducts, charging the 1000 microfarad capacitors. The capacitors discharge through the 0.33 ohm limiting resistor each time the power switch assembly is turned on.

(3) Diode D2 connects across the drive motor armature and functions only during rapid reversals of direction. During such a reversal, the armature continues to operate in the previous direction for a brief period. The armature acts as a generator at this time. Diode D2 carries the generated current and therefore prevents an excessive voltage from appearing across the armature.

(4) The two 5500 microfarad capacitors connect between B2- and B2+. These act as a filter for any voltage transients caused by switching in the system.

3-3. General Requirements for Test and Adjustment

Precautions to be followed throughout all electrical testing and adjustments are as follows:

a. Always check battery polarity.

b. To shut down power, disconnect battery and discharge capacitors according to paragraph 2-5.

c. Always disconnect battery and discharge capacitors before taking resistance readings.

d. If battery is connected, never manually operate a directional contactor unless key switch is on and control system is operating.

e. Do not ground or short any heat sinks (finned assemblies) as they are integral parts of circuits. Never eliminate or modify heat sinks.

f. Do not operate truck without the complete compliment of power switch transistors, except in extreme emergencies. Operation without the full

compliment could result in damage to the remaining transistors.

g. Ensure that battery is charged to above 1.260 specific gravity prior to any testing. Specific gravity readings at 800F are as follows:

1.110 - 1.135	completely discharged
1.170 - 1.200	one-fourth charged
1.205 - 1.230	one-half charged
1.235 - 1.260	three-fourths charged
1.265 - 1.290	fully charged

h. Check operation of replaced parts to ensure trouble has been found.

i. Use the following test equipment or equivalent in addition to normal hand tools:

(1) Volt-ohmmeter with 20, 000 ohms-per-volt dc sensitivity.

(2) Peak-reading meter and shunt (50 mv, 500 amperes).

3-4. Ground Test

a. General. This test is made to assure that a short circuit does not exist between any part of the electrical system and the truck framework.

b. Procedure.

(1) Disconnect battery and discharge capacitors (para 2-5).

(2) Connect the leads of an ohmmeter to the truck framework at two separate points where bare metal is exposed. The ohmmeter should read zero ohm s.

Caution: Use the battery receptacle permanently mounted on the truck, not the connector on the battery cables from the battery.

(3) Leave the negative ohmmeter lead connected to the truck framework. Touch the positive lead to each terminal on the battery receptacle. The ohmmeter must read 50, 000 ohms or more in each case.

(4) Open the contactor unit. Touch the positive lead to either terminal of 400 ampere fuse Fl. (fig. 3-2.) The ohmmeter must read 50, 000 ohms or more.

(5) Place the directional control switch in forward. Touch the positive lead to contactor unit terminal 15. The ohmmeter must read 50, 000 ohms or more.

(6) Restore the directional control switch and disconnect the ohmmeter. Close contactor unit and reconnect battery.

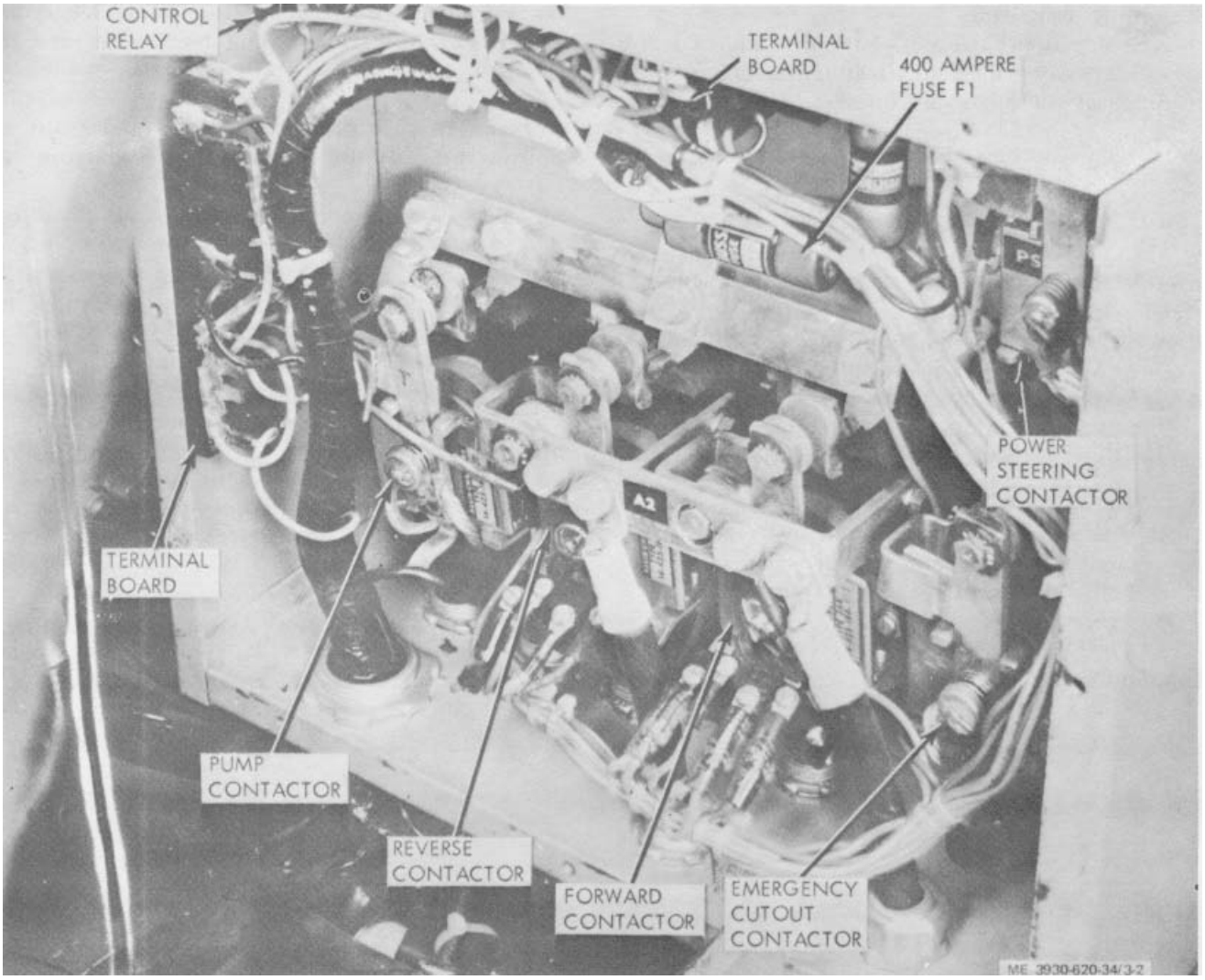

Figure 3-2. Contactor unit, front view

3-5. Contactor Unit

a. Test.

(1) Use thin cardboard to insulate all four pairs of contacts on the forward and reverse contractors (F and R). (fig. 3-2.)

(2) Turn on the key switch, apply pressure to the seat, and make sure the emergency stop switch is released. The power steering (PS) and emergency cutout (ECI contractors must operate.

(3) Move the directional control switch to the forward (F) position and depress the accelerator pedal slightly. The forward contactor (F) and the control relay (CR) must operate.

(4) Release the pedal and move the directional control switch to the reverse (R) position. Depress unit. the accelerator pedal slightly. The reverse contactor (R) and the control relay must operate.

(5) With the pedal still depressed, more the directional control switch to the forward (F) position. The reverse contactor and control relay must de-energize.

b. Inspection. Visually inspect all components for evidence of wear or damage. Check for cracked or frayed wires.

c. Disassembly.

(1) Disconnect battery and discharge capacitors (para 2-5).

(2) Reference figure 3-3 and disassemble contactor unit in numerical sequence.

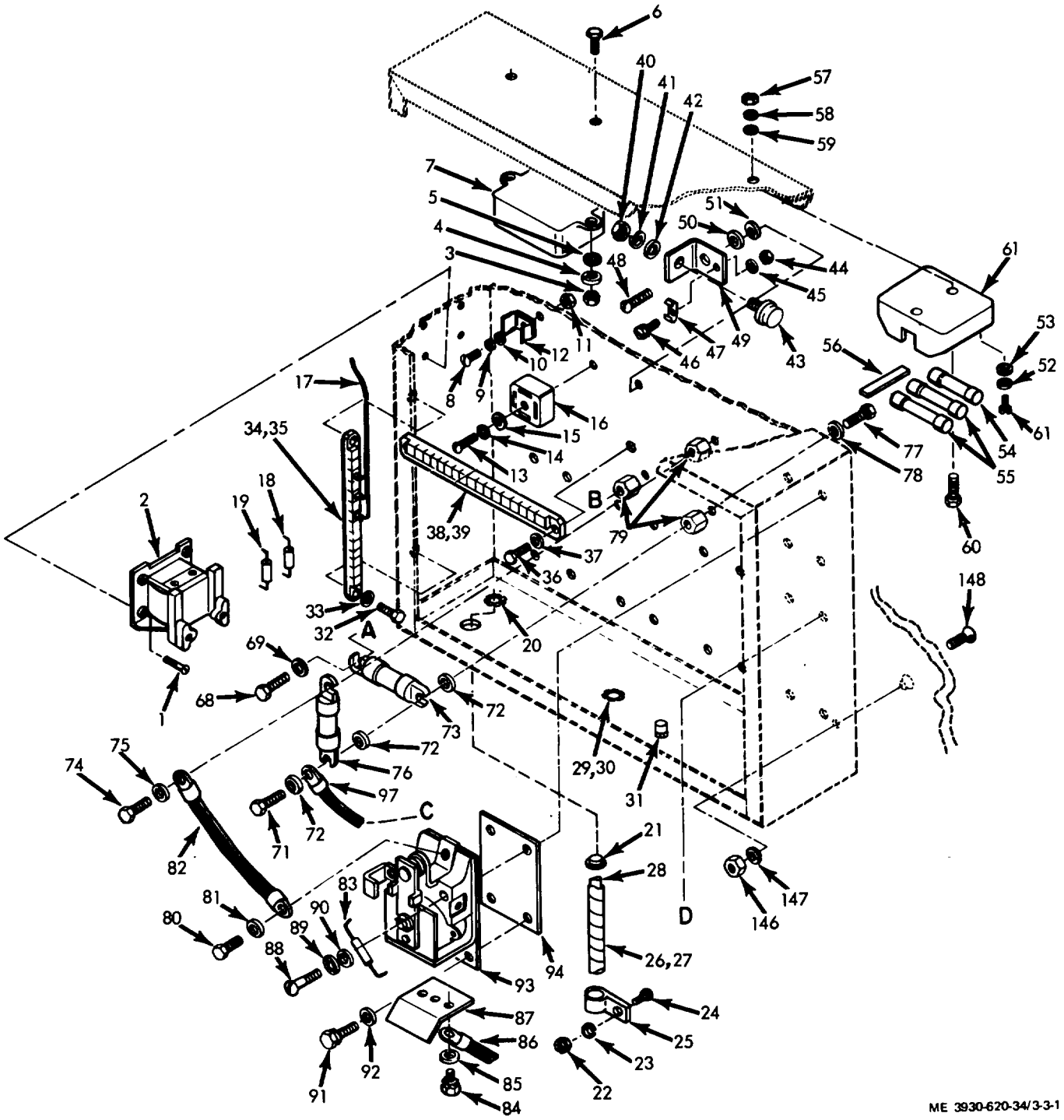

Figure 3-3. Contactor unit, exploded view. (Sheet 1 of 2)

KEY to fig. 3-3:

1. Screw
2. Control relay assembly
3. Nut (2)
4. Lock Washer (2)
5. Washer (2)
6. Screw (2)
7. Resistor
8. Screw
9. Lock Washer
10. Washer
11. Nut
12. Standoff insulator (2)
13. Screw
14. Lock washer
15. Washer
16. Diode bridge block
17. Wiring harness
18. Diode
19. Diode
20. Nut
21. Connector
22. Nut
23. Lock washer
24. Screw
25 Clamp
26. Marker
27. Plastic wrap
28. Wiring harness
29. Nut (3)
30. Connector (13)
31. Bushing insulator
32. Screw (2)
33: Lock washer (2)
34. Marker
35. Terminal board
36. Screw (2)
37. Lock washer (2)
38. Marker
39. Terminal board
40. Nut
41. Lock washer
42. Washer
43:. Diode
44. Nut
45. Lock washer
46. Screw and lock washer
47. Terminal lug
48. Screw and lock washer
49. Angle bracket
50. Washer
51. Lock Washer
52. Lock Washer (6)
53. Washer (6)
54 Fuse, 5 amp
55. Fuse, 15. amp (2)
56. Marker
57. Nut (2)
58. Lock washer (2)
59. Washer (2)
60. Screw (2)
61. Fuse holder
62. Screw (3)
63. Lock washer (3)
64. Wash (3)
65. Screw-and lock washer
66. Washer
67. Bus bar
68. Screw and lock washer
69. Washer
70. Bus bar
71. Screw and lock washer
72. Washer (3)
73. Fuse, 400 amp
74. Screw and Lock washer
75. Washer
76. Fuse, 35 amp
77. Screw (3)
78. Lock washer (3)
79. Standoff insulator (3)
80. Screw and lock washer
81. Washer
82. Lead
83. Diode
84. Screw and lock washer (2)
85. Washer (2)
86. Lead
87. Terminal angle
88. Screw (2)
89. Lock washer (2)
90. Washer (2)
91. Screw and lock washer (2)
92. Washer (2)
93. Relay
94. Insulator
95. Screw and lock washer
96. Washer
97. Lead
98. Screw and lock washer
99. Washer
100. Lead
101. Terminal
102. Lead
103. Lead
104. Lead
105 Screw (2)
106. Lock washer (2)
107. Washer (2)
108. Screw and lock Washer (2)
109. Washer (2)
110. Emergency cutout contactor
111. Screw (2)
112. Lock washer (2)
113. Washer (2)
114. Lead
115. Cable nipple
116. Terminal angle
117. Screw (2)
118. Lock washer (2)
119. Washer (2)
120. Screw and lock washer (2)
121. Washer (2)
122. Pump contactor
123. Insulator
124. Screw (2)
125. Lock washer (2)
126. Washer (2)
127. Lead
128. Cable nipple
129. Screw (2)
130. Lock washer (2)
131. Washer (2)
132. Bus bar
133. Screw (4)
134. Lock washer (4)
135. Washer (4)
136. Lead (2)
137. Cable nipple
138. Terminal angle
139. Screw (4)
141. Lock washer (4)
141. Washer (4)
142. Screw and lock washer (4)
143. Washer (4)
144. Forward / reverse contactor 121
145. Insulator (2)
146. Nut (3)
147. Lock washer (3)
148. Screw (3)

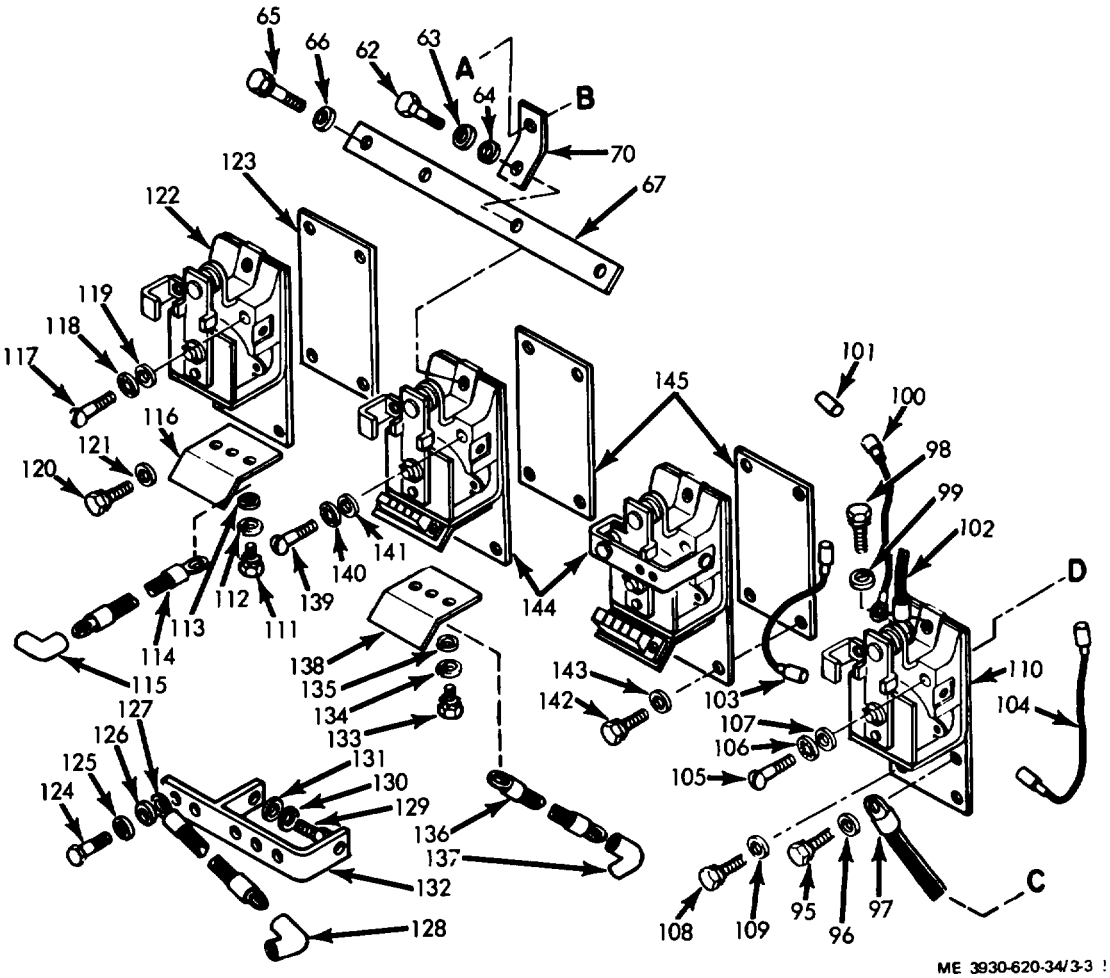

Figure 3-3. Contactor unit, exploded niew. (Sheet 2 of 2)

Figure 3-3. Contactor unit, exploded view (Sheet 2 of 2)

d. Diode Bridge Block The diode bridge block can be tested with an ohmmeter after the leads are disconnected. (fig. 3-4.)

(1) Measure the forward resistance of each diode. The resistance should be approximately 10 to 20 ohm s.

Note. Forward resistance is measured with negative lead to cathode and positive lead to anode.

(2) Measure the backward resistance of each diode. The resistance should be greater than 200 ohms.

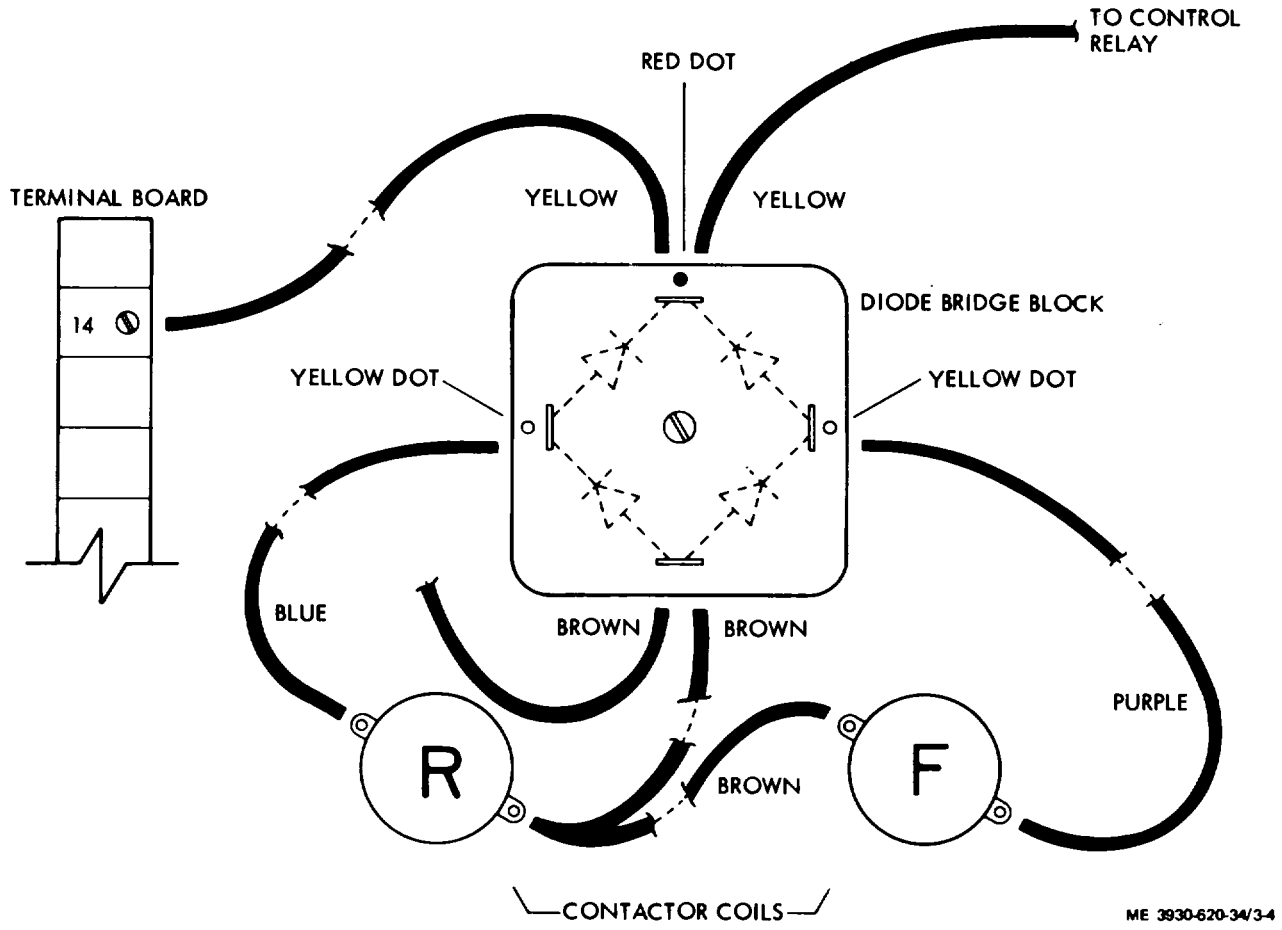

Figure 3-4. Diode bridge block connection

e. Pump or Emergency Cutout Contactor.

(1) Disassemble in the sequence of figure 3-5 and as follows:

(a) Disconnect flexible lead (8).

(b) Remove armature screws allowing complete armature (16) to be removed.

(c) Lift return spring (18) out of coil center. Insert screw driver down center of coil and remove coil mounting screw (1) and lock washer (20).

(2) Inspect parts for wear and damage, including contacts (3).

(3) Reassemble in the reverse order of disassembly.

(4) Check for maximum air gap of 5/ 16 inch.

(5) Check for maximum contact misalignment when closed of 3/64 inch.

KEY to fig. 3-5:

1. Screw (2)
2. Lock washer (2)
3. Contact (2)
4. Screw
5. Screw
6. Lock washer
7. Washer
8. Flexible lead
9. Cotter pin
10. Cup washer
11. Centering washer
12. Contact spring
13. Movable carrier
14. Pivot bearing
15. Shoulder pin
16. Armature
17. Stop pivot
18. Return spring
19. Screw
20. Lock washer
21. Magnet coil
22. Core
23. Screw (2)
24. Lock washer (2)
25. Armature retainer
26. Screw
27. Washer
28. Armature retainer support
29. Screw
30. Washer
31. Stationary contact support
32. Screw
33. Countersink lock washer
34. Stationary contact block
35. Magnet yoke

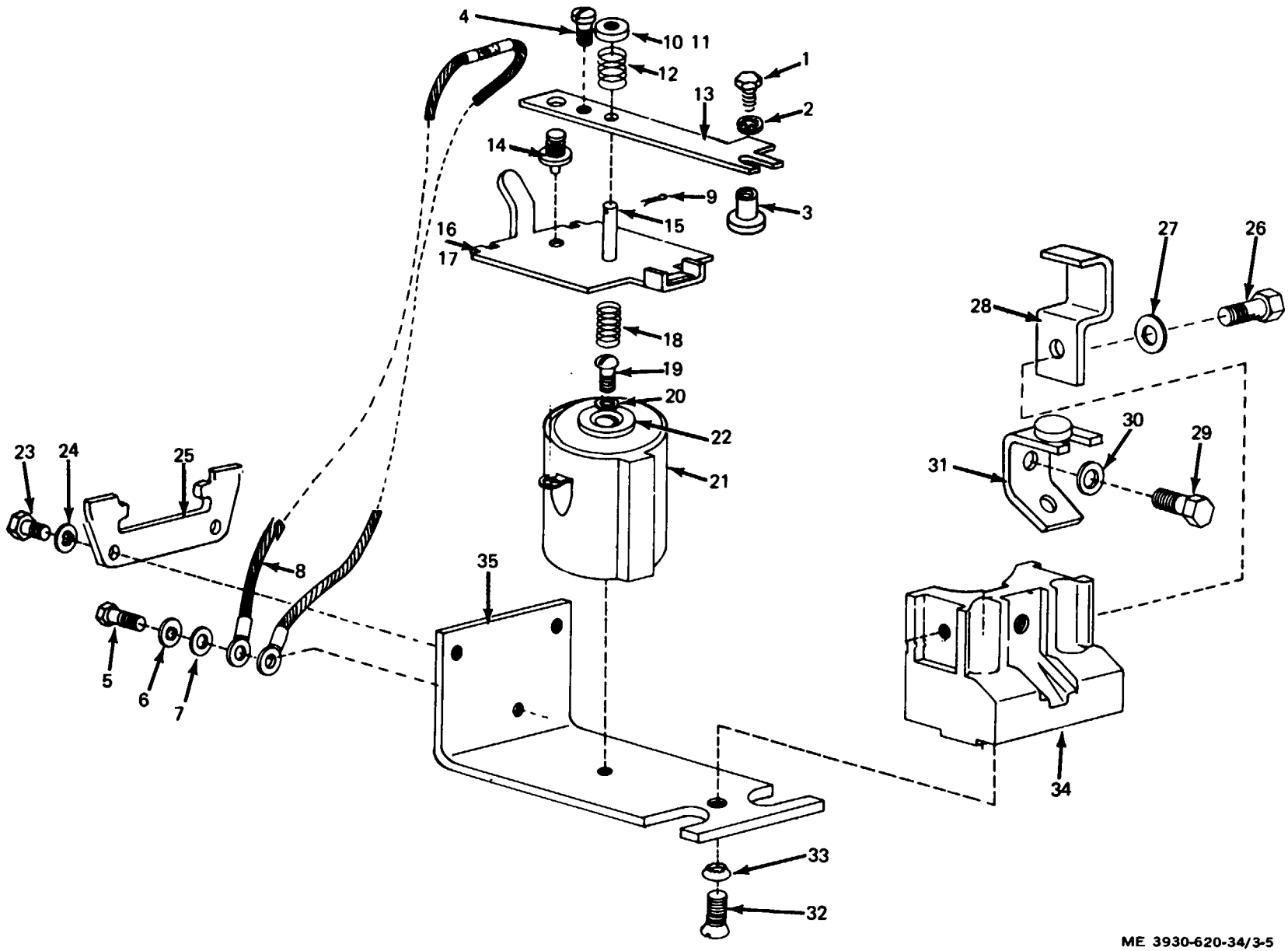

Figure 3-5. Pump or Emergency cutout contactor, exploded view.

f Forward or Reverse Contactor.

(1) Disassemble in the sequence of figure 3-6 and as follows:

(a) Disconnect flexible lead (10)

(b) Remove armature screws allowing complete armature (19) to be removed.

(c) Lift return spring (20) out of coil center. Insert screwdriver down center of coil and remove coil mounting screw (21) and lock washer (22).

(2) Inspect parts for wear and damage, including contacts (3).

(3) Reassemble in the reverse order of disassembly.

(4) Check for maximum air gap of 5 / 16 inch.

(5) Check for maximum contact misalignment, when closed, of 3/64 inch.

(6) Check that microswitch (26) on contactor operates just prior to contact closure of normally open contacts.

KEY to fig. 3-6:

1. Screw 141
2. Lock washer (41
3. Contact (41
4. Screw
5. Lock washer
6. Washer
7. Screw
8. Lock washer
9. Washer
10. Flexible lead
11. Cable terminal
12. Cotter pin ll2.
13. Centering washer
14. Contact spring
15. Movable carrier
16. Stop pivot
17. Pivot bearing
18. Shoulder pin
19. Armature
20. Return spring
21. Screw
22. Lock washer
2:3. Magnet coil
24. Core
25. Screw 121
26. Microswitch
27 . Screw (21
28. Switch support
29. Screw
30. Washer
31. Contact support
32. Screw (2)
33 Washer (2)
34. Contact support
35. Screw
36. Countersink lock washer
37. Stationary contact block
38. Magnet yoke

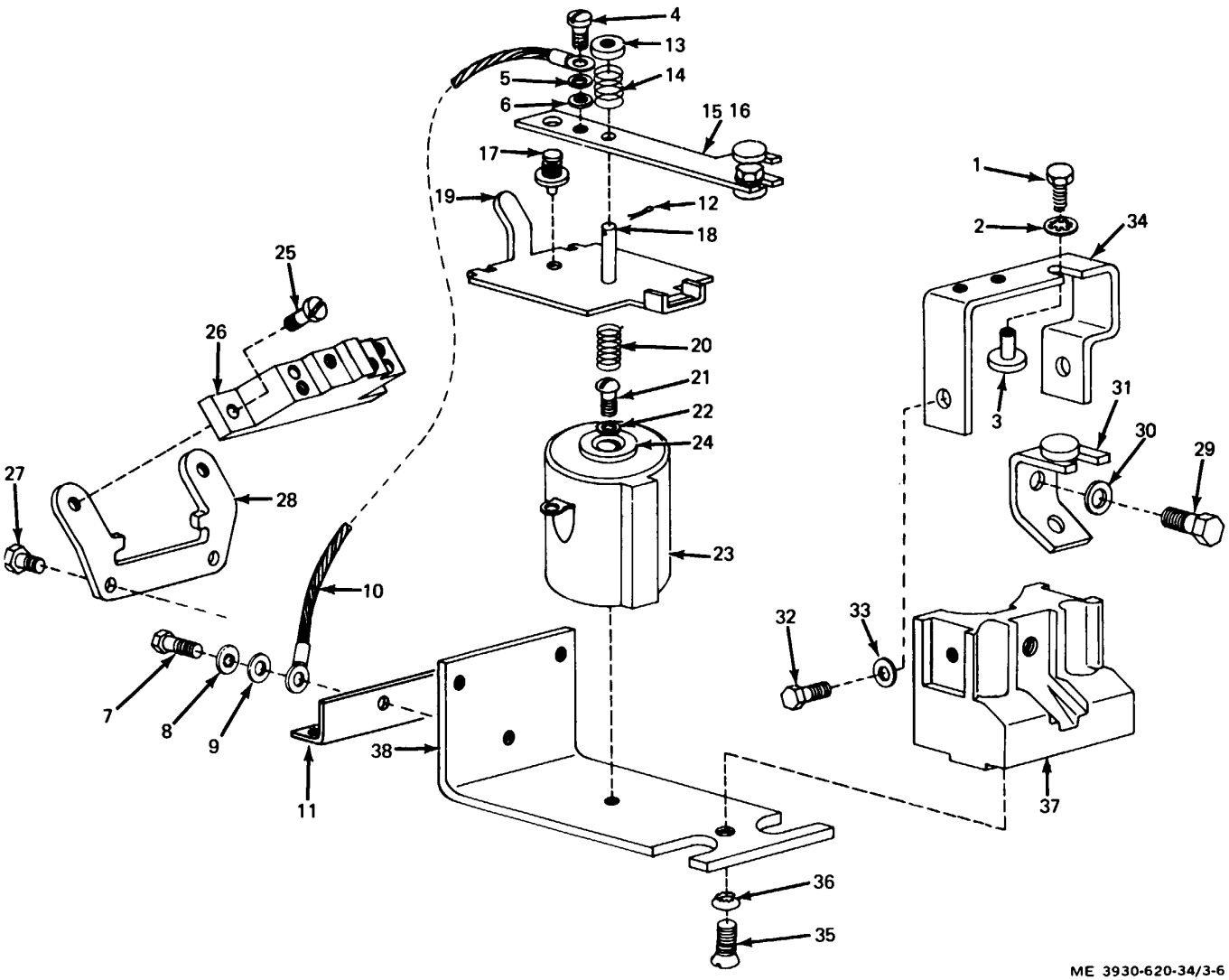

Figure 3-6. Forward or reverse contactor. exploded view.

g. Power Steering.

(1) Disassemble in the sequence of figure 3-7 and as follows:

(a) Disconnect flexible lead (8).

(b) Remove armature screws allowing complete armature (15) to be removed.

(c) Lift return spring (16) out of coil center. Insert screwdriver down center of coil and remove coil mounting screw (17) and lock washer (18).

(2) Inspect parts for wear and damage, in- clhiding contacts (31.

(3) Reassemble in the reverse order of disassembly.

(4) Check for maximum air gap of 5 / 16 inch.

(5) Check for maximum contact misalign- ment, when closed, of 3/64 inch.

h Control Relay Assembly. (fig. 3-8.)

(1) Examine parts and leads for wear, fraying and signs of overheating.

(2) Use an ohmmeter to check leads for continuity without disconnecting.

(3) Insulate contacts to check resistor value without disconnecting.

KEY to fig. 3-7:

1. Nut (2)
2. Lock washer (2)
3. Contact (2)
4. Screw and lock washer
5. Washer
6. Screw and lock washer
7. Washer
8. Flexible lead
9. Cotter pin
10. Cup washer
11. Spring
12. Contact carrier
1:3. Pivot bearing
14. Shoulder pin
15 Armature
16. Return spring
17. Screw
18. Lock washer
19. Magnet coil
20. Core
21. Screw (2)
22. Armature retainer
23:. Screw and lock washer
24. Washer
25. Armature stop bracket
26. Screw and lock washer
27. Washer
28. Stationary contact support
29. Screw
30. Countersunk lock washer
31. Stationary contact block
32. Magnet yoke

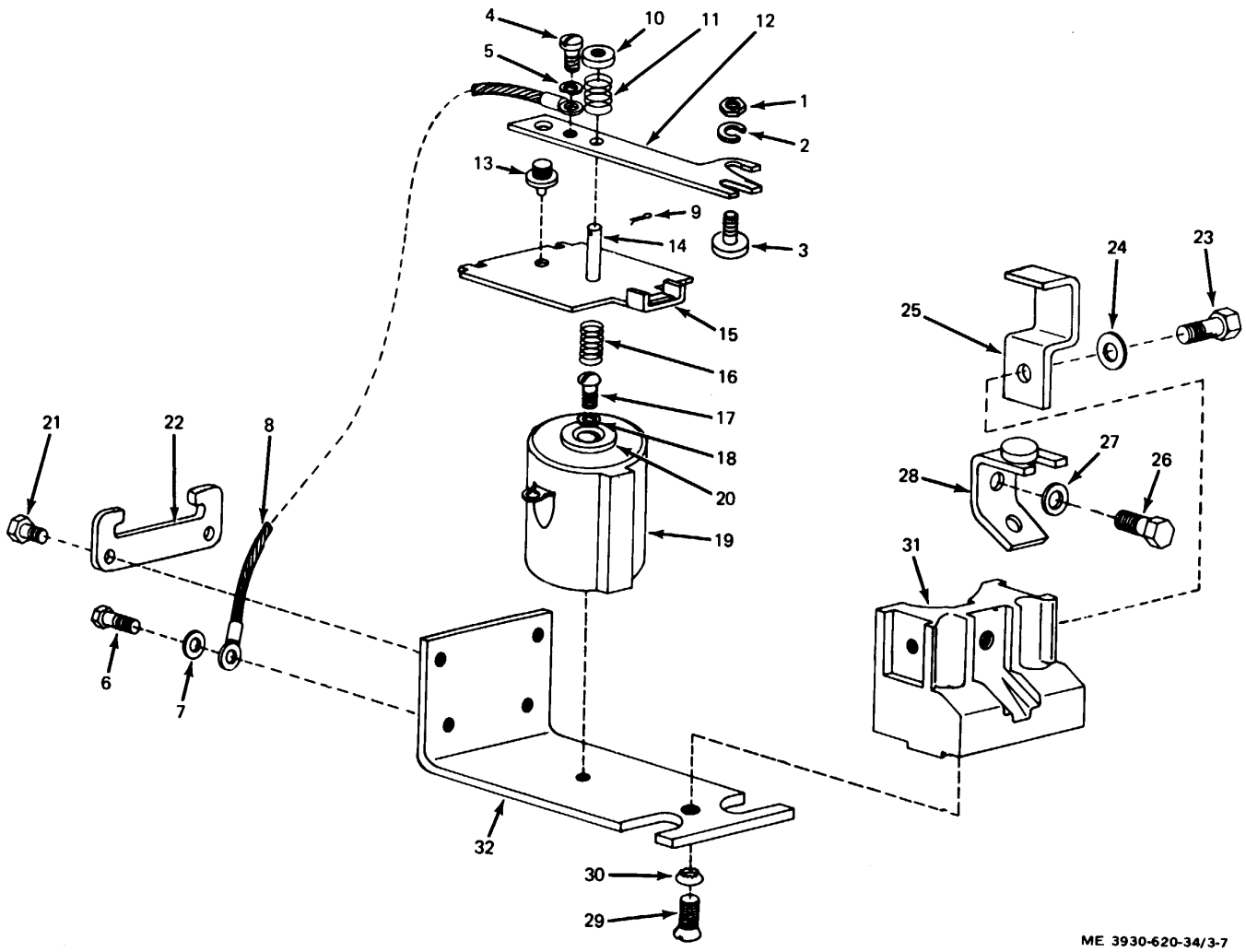

Figure 3-7. Power steering contactor. exploded view.

(4) Disconnect diode to measure forward and backward resistance.

KEY to fig. 3-8:

1. Jumper wire
2. Lead
3. Lead
4. Lead
5. Lead
6. Lead
7. Insulation
8. Diode
9. Resistor
10. Relay

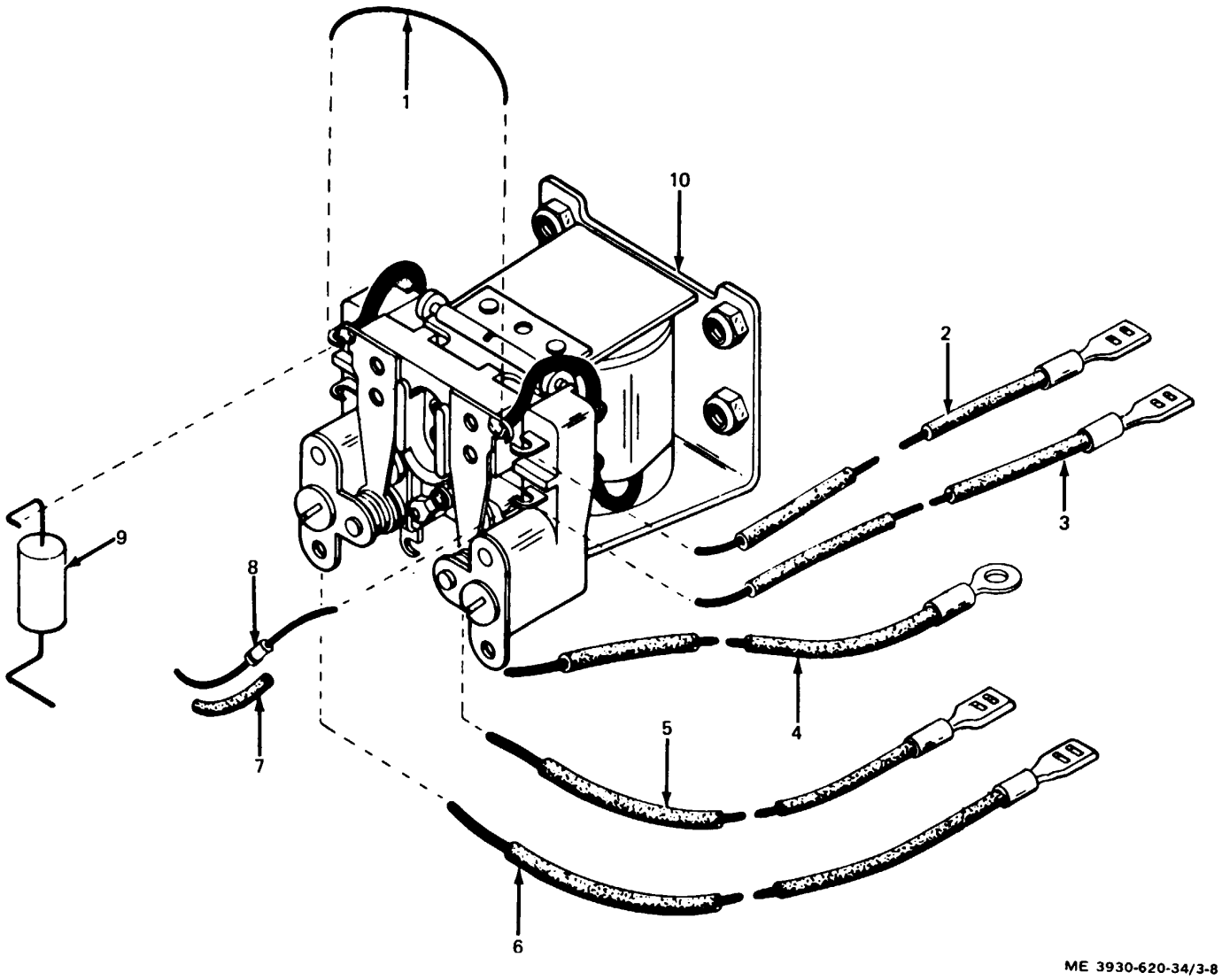

Figure 3-8. Control relay assembly. exploded view.

i. Reassembly. Reassemble the parts in the contactor box by installing the mounting hardware and other parts removed. (fig. 3-3.) Be sure an insulator is placed under each contactor when it is remounted to the control unit box.

3-6. Speed Control

a. General.

(1) The speed control consists of the accelerator pedal linkage and the speed control box assembly. The box assembly includes the speed interlock microswitch and the speed potentiometer. The speed potentiometer should be adjusted prior to the adjustment of the inching control on the control unit.

(2) Before working on the speed control; disconnect battery and discharge capacitors (para 2-5).

b. Description.

(1) The accelerator pedal is connected through linkage to the shaft in the speed control box assembly. (fig. 3-9.) The action of the spring holds the arm in the position shown when no pressure is applied to the pedal.

(2) The arm determines the position of the actuator, which is held by the set screw to the potentiometer shaft. In the up position, the potentiometer provides a resistance of about 15.000 ohms.

(3) When the pedal is depressed, the actuator rotates clockwise, turning the potentiometer shaft and releasing the microswitch plunger. This rotation decreases the resistance of the potentiometer.

(4) Maximum depression of the pedal is reached when the arm bears against the down stop. At this point, the potentiometer provides a resistance of about 40 ohms.

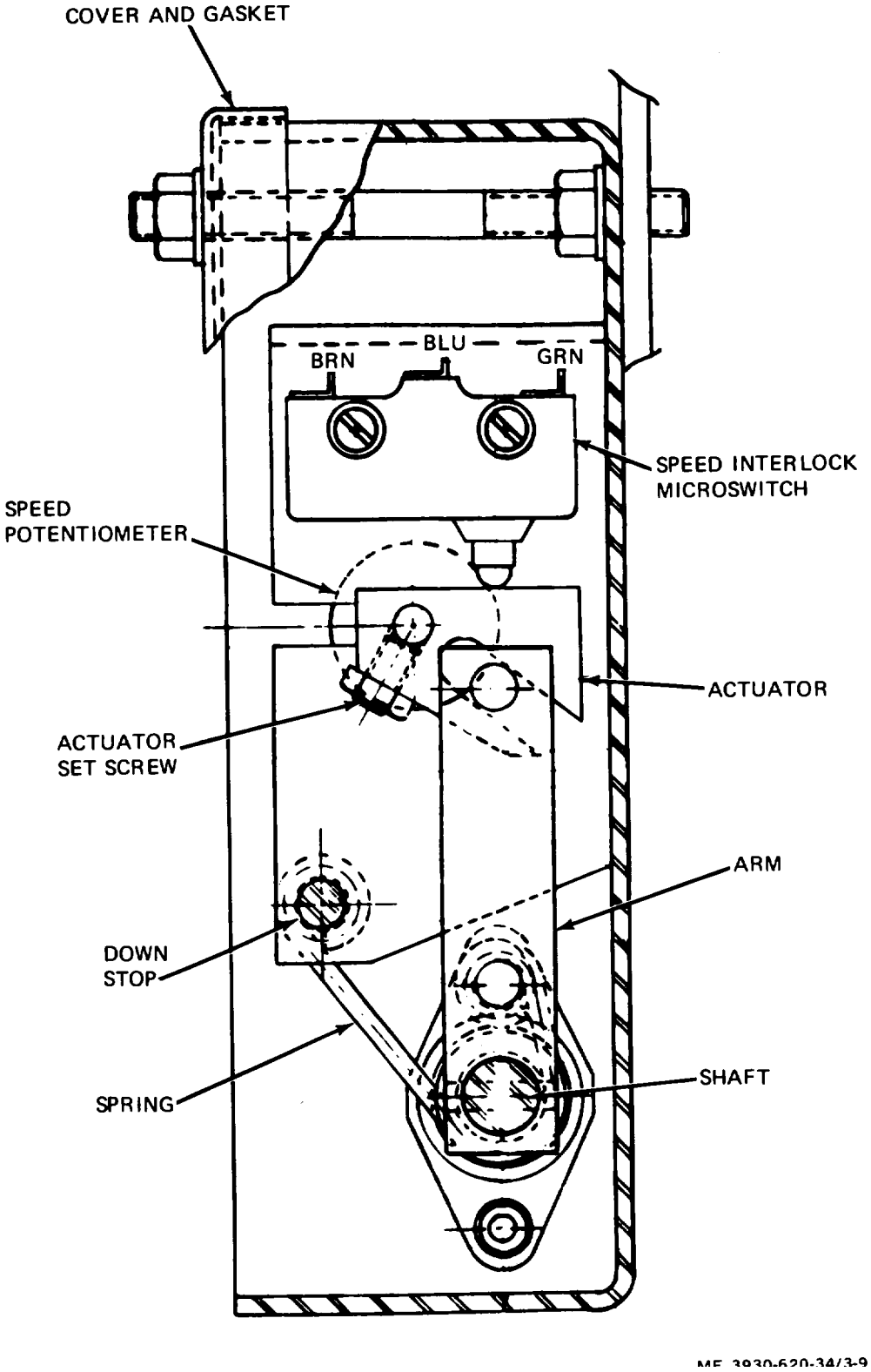

Figure 3-9. Speed control box assembly, sectional view

c. Inspection. (fig. 3-10 and 3-11.)

(1) Remove toe plate ITM 10-3930-620-12}.

(2) Remove the two nuts (1, fig. 3-11) and lock washers (2) and remove the cover (3) and gasket 141 from the speed control box assembly. Inspect the gasket for damage and deterioration.

(3) Operate the pedal (17, fig. 3-10) and check for freedom of movement and that the pedal returns to the up position.

(4) To check spring tension, remove the cotter pin (1, fig. 3-10) and yoke pin (2) to separate the yoke (3) from the box assembly shaft. A force of 17 to 25 pounds should be required to move the shaft. Reconnect the yoke and shaft.

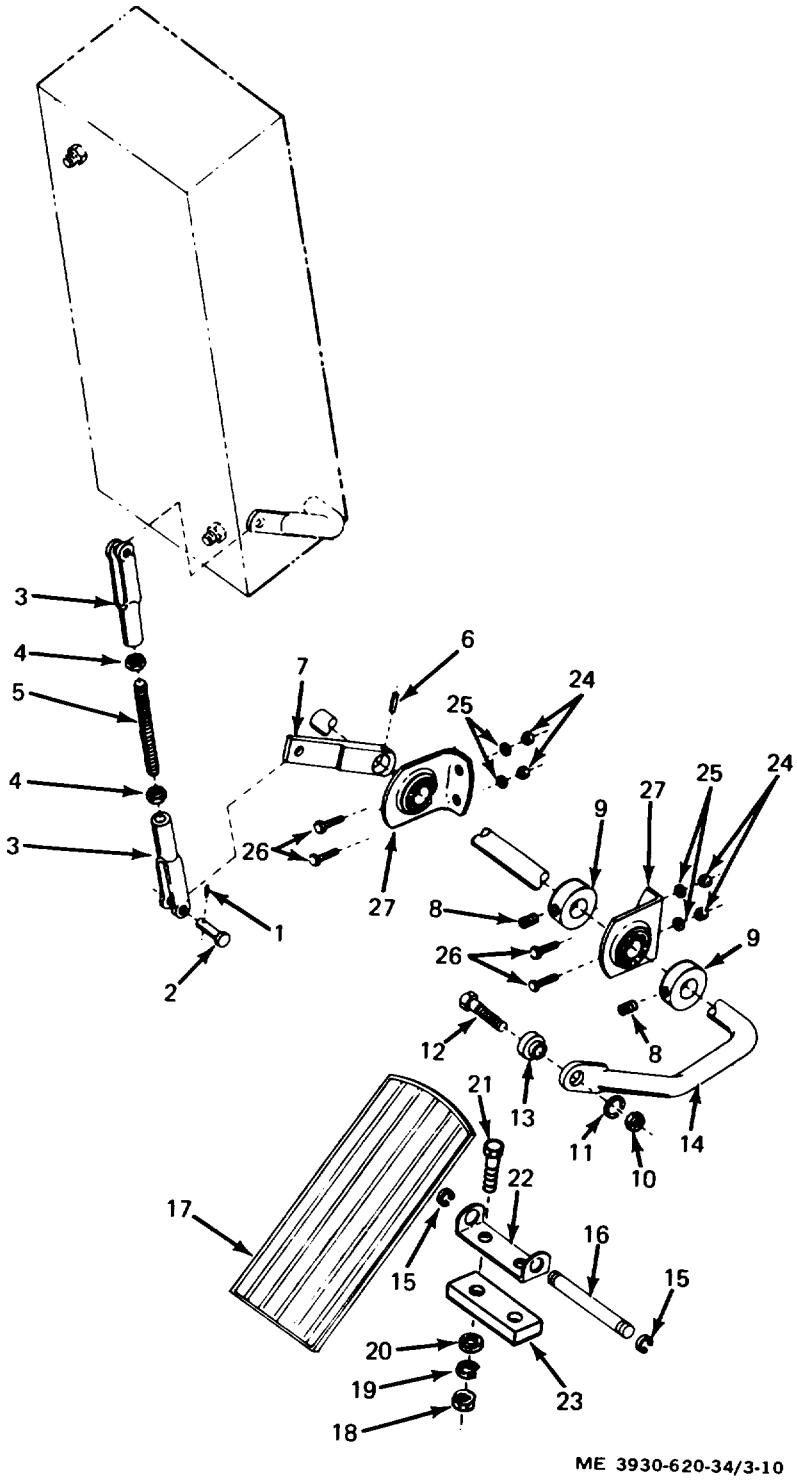

Figure 3-10. Accelerator pedal and linkage, exploded view

KEY to fig. 3-10:

1. Cotter pin (2)
2. Yoke pin (2).
3. Yoke (2)
4. Jam nut (2)
5. Yoke rod
6. Roll pin
7. Connecting link
8. Set screw (2)
9. Collar (2)
10. Nut
11. Lock Washer
12. Screw
13. Bearing
14. Rod

15. Retaining ring (2)
16. Pin
17 Pedal
18. Nut (2)
19. Lock washer (2)
20. Washer (2)
21. Screw (2)
22. Bracket
2:3. Spacer
24. Nut (4)
25. Lock washer (4)
26. Screw (4)
27. Flange hearing (2)

KEY to fig. 3-11

1 Nut (2)
2. Lock washer (2)
3. Cover
4. Gasket
5. Nut (2)
6. Lock Washer (2)
7. Washer
8. Spacer (2)
9. Screw (2)
10. Washer (2)
11. Microswitch
12. Nut
13. Set screw
14. Potentiometer with washer. Lock washer and nut
15. Washer
16. Actuator arm
17. Nut
18. Washer
19. Screw
20. Nut
21. Roll pin
22. Set screw
23. Collar
24. Spring
25. Arm assembly
26. Shaft
27. Nut (4)
28. Lock washer (4)
29. Screw (4)
30. Flange bearing (2)
31. Button plug
32. Button plug
33. Nut (2)
34. Lock washer (2)
35. Nut (2)
36. Rod (2)
37. Harness
38. Box

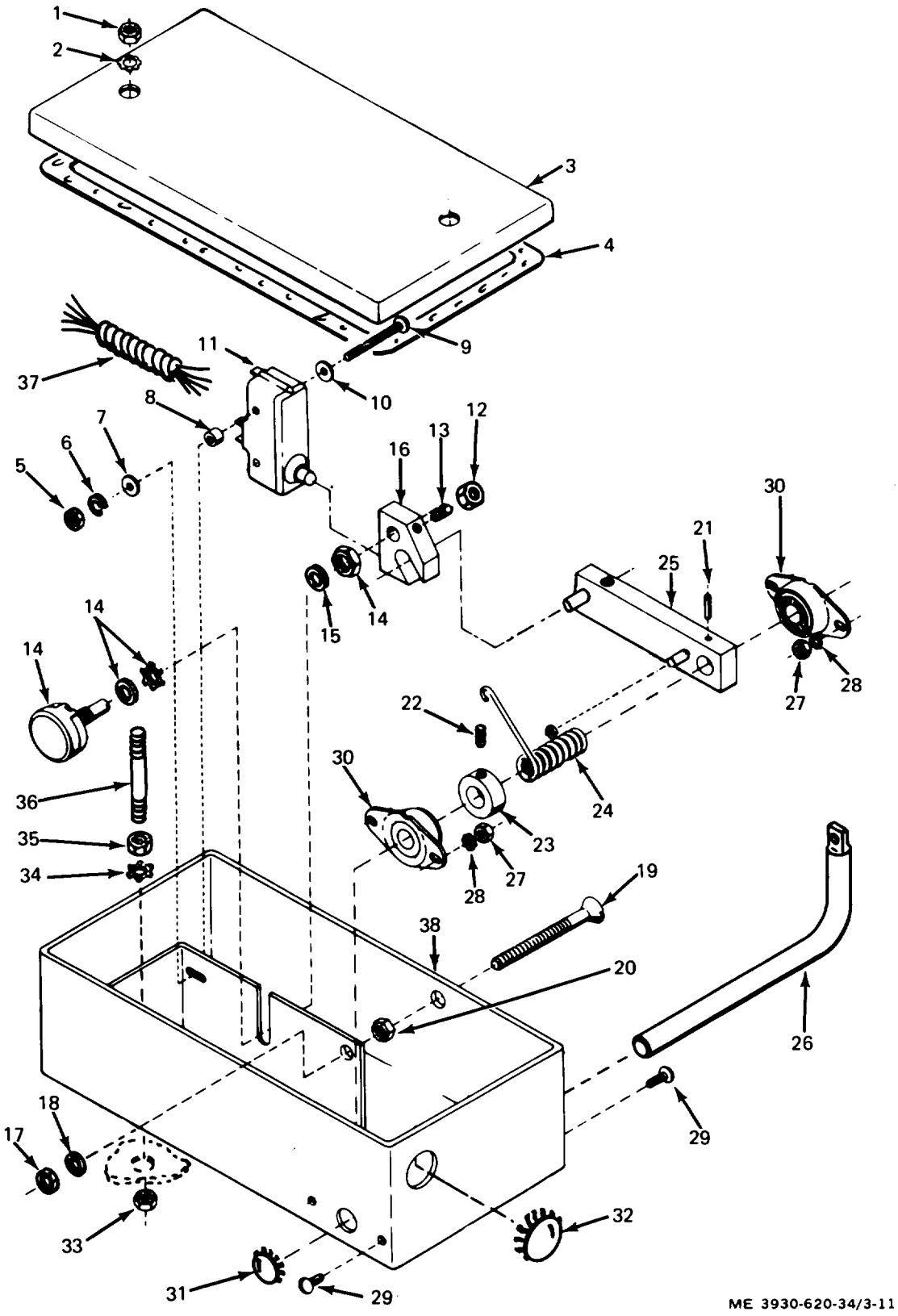

Figure 3-11. Speed control bus assembly, exploded view/

(5) Check for evidence of wear, binding, damage, and bending of parts that might impair operation.

d. Disassembly.

(1) Disassemble accelerator pedal and linkage according to figure 3-10.

(2) Disassemble speed control box assembly according to figure 3-11.

e. Reassembly.

(1) Reassemble speed control box assembly according to the reverse of figure 3-11 and as follows:

(a) Install the microswitch (11) with the common terminal toward the rear of the box.

(b) Install the potentiometer (14) with the terminals toward the bottom of the box.

(c) Connect the purple wire of the harness (37) to the center terminal of the potentiometer. Connect the yellow wire to the terminal nearest you.

(2) Reassemble the accelerator pedal and linkage according to the reverse of figure 3-10.

f. Adjustment. To aid in adjustment it is recommended that a toe plate fixture be substituted in place of the toe plate. The fixture should be the same thickness as the toe plate and large enough so the accelerator rod bearing (13, fig. 3-10) will make contact with it. Secure the fixture to the right hand mountings on the truck frame.

(1) Disconnect wires from speed potentiometer (14. fig. 3-11). Connect ohmmeter between center terminal and terminal nearest you.

(2) Loosen the set screw (13) in the actuator arm 116) so the potentiometer shaft is free. .

(3) Depress the accelerator pedal. Adjust the yoke positions on the yoke rod (5, fig. 3-10) so the arm assembly (5, fig. 3-11) in the box touches the down stop screw (191 when the accelerator bearing is within 1/ inch of the toe plate (or fixture).

(4) With the pedal depressed fully, adjust the potentiometer for an ohmmeter reading of 30 to 50 ohms. Tighten the set screw (13) in the actuator to securely engage the potentiometer shaft.

(5) With the pedal in the up position, a reading of 15, 000 to 16, 000 ohms should be obtained on the ohm meter.

(6) Adjust position of microswitch (11) so its plunger operates when the pedal is l/4 inch from the full up position.

(7) Recheck the readings of steps 4 and 5 and the microswitch operation of step 6.

Note. P1erform the inching control adjustment this time. Refer to paragraph 3-7d.

(8) Disconnect ohmmeter and reconnect wires to potentiometer.

(9) Remove the toe plate fixture and install the toe plate (TM 10-3930-620-12).

(10) Install the box cover (3) and gasket (4) using the two screws (1) and lock washers (2 .

3-7. Control Unit

a. Voltage Test. This test should be made a with a fully charged battery. Set the voltmeter to the appropriate scale for each test. Connect the voltmeter negative and positive leads according to the - and + indicators given for each measurement. (fig. 3-12.)

Note. 'The seat must be depressed and emergency stop switch released when performing these tests.

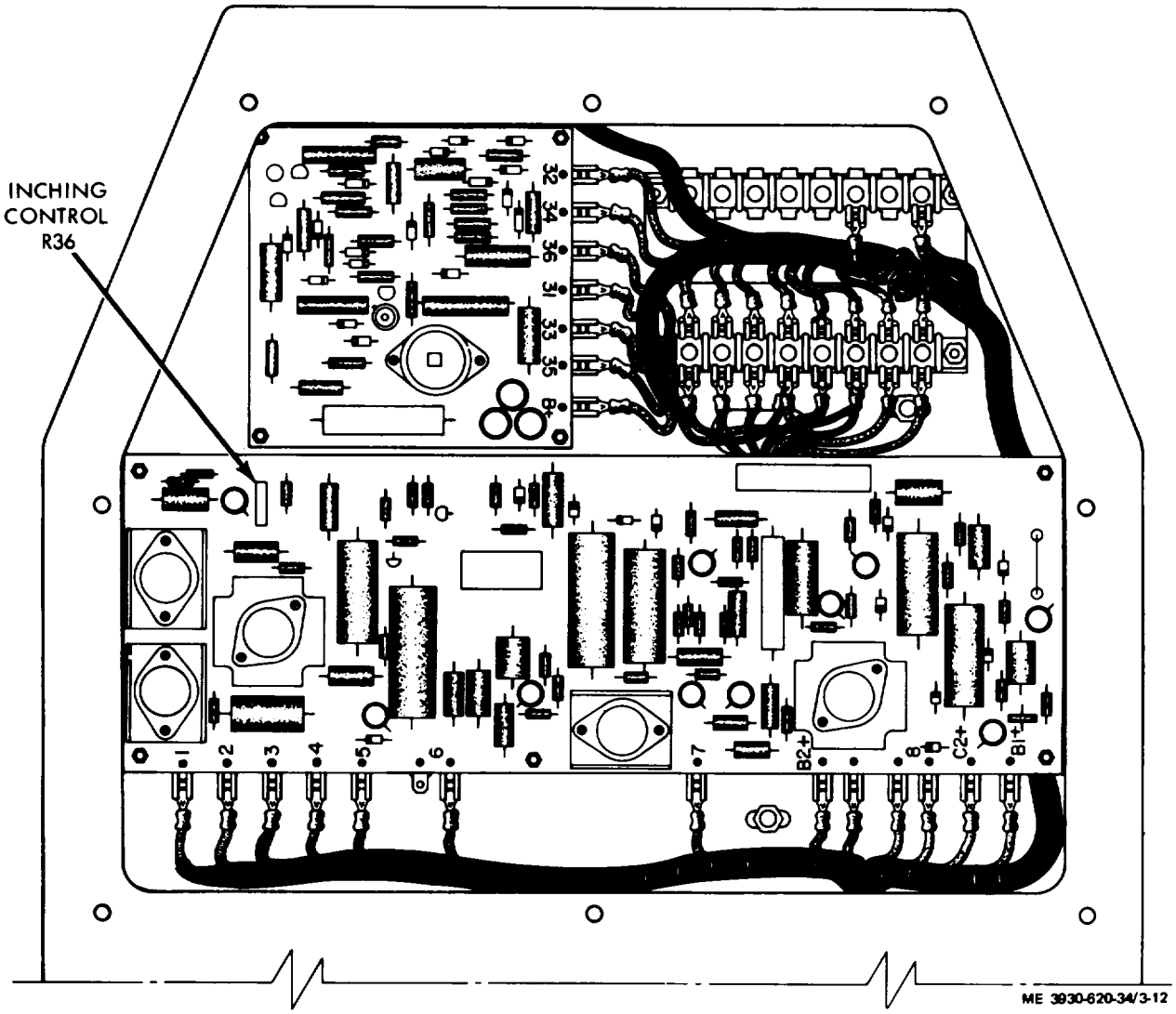

Figure 3-12. Control compartment, terminal and control locations

(1) Turn off key switch. Isolate all power circuits by placing thin cardboard between all pairs of contacts on all contractors except the EC contactor.

(2) Remove control compartment cover panel (TM 10-3930-620-12). Connect battery and turn on key switch.

(3) Measure for full battery voltage from terminal 8 (-) to terminals B +, B2+, and C2+.

(4) Measure for full battery voltage from terminal 2 (-) to terminal B2+.

Note. If incorrect reading is obtained on terminals 2, 4. 6. or 7, test resistor assembly (para 3-8).

(5) Measure for 0.14 volts from terminal 4 (-) to terminal B2+.

(6) Measure for 13 to 15 volts from terminal 6 to terminal B2+.

(7) Measure for 9.5 to 10.5 volts from terminal 7 (-) to terminal B2+.

(8) Measure for 4.5 to 5.5 volts from terminal B2+ (- lead) to terminal I (+ lead).

Note. If the reading of step 18) is incorrect, test the diode bias block on the power switch assembly (para 3-9).

(9) Measure voltage between terminal 3 (--)and terminal B2+ as follows:

(a) Set directional control switch in forward (F) position.

(b) With accelerator pedal up, voltmeter should read below zero.

Note. If the reading of step (b) or (c) is incorrect, check the adjustment of the speed potentiometer (para 3-6 f).

(c) With accelerator pedal fully depressed, voltmeter should read approximately 4 volts.

(d) Voltage reading should vary smoothly

according to movement of accelerator pedal. If not, speed potentiometer is defective.

(10) Remove the cardboard insulation from the contractors.

b. Under voltage Test.

(1) Disconnect battery and discharge capacitors (para 2-5).

(2) Insulate the tips of all contractors on contactor unit with thin cardboard (except EC contactor).

(3) Disconnect the two wires from terminal 8 on the control unit. Connect the two wires together.
(Two n ale spade terminals connected by a one inch piece of wire make a useful tool for this purpose.)

(4) Connect a wire from the negative battery terminal to terminal 8 on the control unit.

(5) Connect the battery and turn the key switch on.

(6) Connect the voltmeter between control unit terminal 2 (+ lead) and terminal 3 (- lead). The voltmeter should read the full battery voltage.

(7) Move the wire from the negative battery terminal to each other battery terminal, working toward the positive terminal. When the voltmeter, reading drops to about one-half volt, measure the voltage between the positive terminal and the terminal that produces the under voltage condition. This voltage must be between 20 and 24 volts. If not, the control unit requires repair.

(8) Disconnect battery and discharge capacitors (para 2-5).

(9) Disconnect the jumper wire to battery and the juniper between the two wires. Reconnect the two wires to control unit terminal 8. Remove the insulation from the contactor unit.

c Current Limit Test.

(1) Disconnect battery and discharge capacitors (para 2-5).

(2) Disconnect truck lead from B2- terminal. Connect 50 millivolt, 500 ampere shunt between truck lead and B2- terminal.

(3) Connect peak-reading meter in parallel across shunt: Red lead to shunt terminal at B2--;black lead to other shunt terminal.

(4) Set peak-reading meter to 1000 ampere scale.

(5) Set voltmeter to 50 volt scale. Connect between control unit terminal 2 (+ lead) and terminal 3 (- lead)

(6) Short circuit brake interlock switch by connecting insulated wire with alligator clips between its two terminals.

(7) Connect battery and turn key switch on.

Caution: Do not allow peak-reading meter indication to exceed 800 ampers at any time.

(8) Set directional control switch to forward (F) position. Stall drive wheels using service brake.

(9) Observe both meters and slowly depress the accelerator pedal. The voltmeter reading should increase to the full battery voltage at the current limit point. This should occur between 720 and 760 amperes.

(10) If current limit point is incorrect, control unit requires repair.

(11) Disconnect battery and discharge capacitors (para 2-5).

(12) Disconnect voltmeter, peak-reading meter, and shunt.

(13) Reconnect truck lead to terminal B2-.

(14) Remove the short circuit from the brake interlock switch.

d. Inching Control Adjustment. The inching control adjustment is made following the speed potentiometer adjustment of paragraph 3-6f.

(1) Raise and block the drive wheels. Warning: Be sure drive wheels are clear of blocks and ground.

(2) Set the directional control switch to the forward (F) position.

(3) Depress the accelerator pedal 1/2 inch beyond the point where the microswitch in the peed control box assembly operates.

(4) Adjust inching control R36 on the control unit to the point where the drive wheels just barely begin to rotate. (fig. 3-12.)

e. Removal

(1) Disconnect battery and discharge capacitors (para 2-5t.

(2) ’Tag and disconnect the leads.

(3) Remove the five nuts (1. fig. 3-13) and remove the control unit.

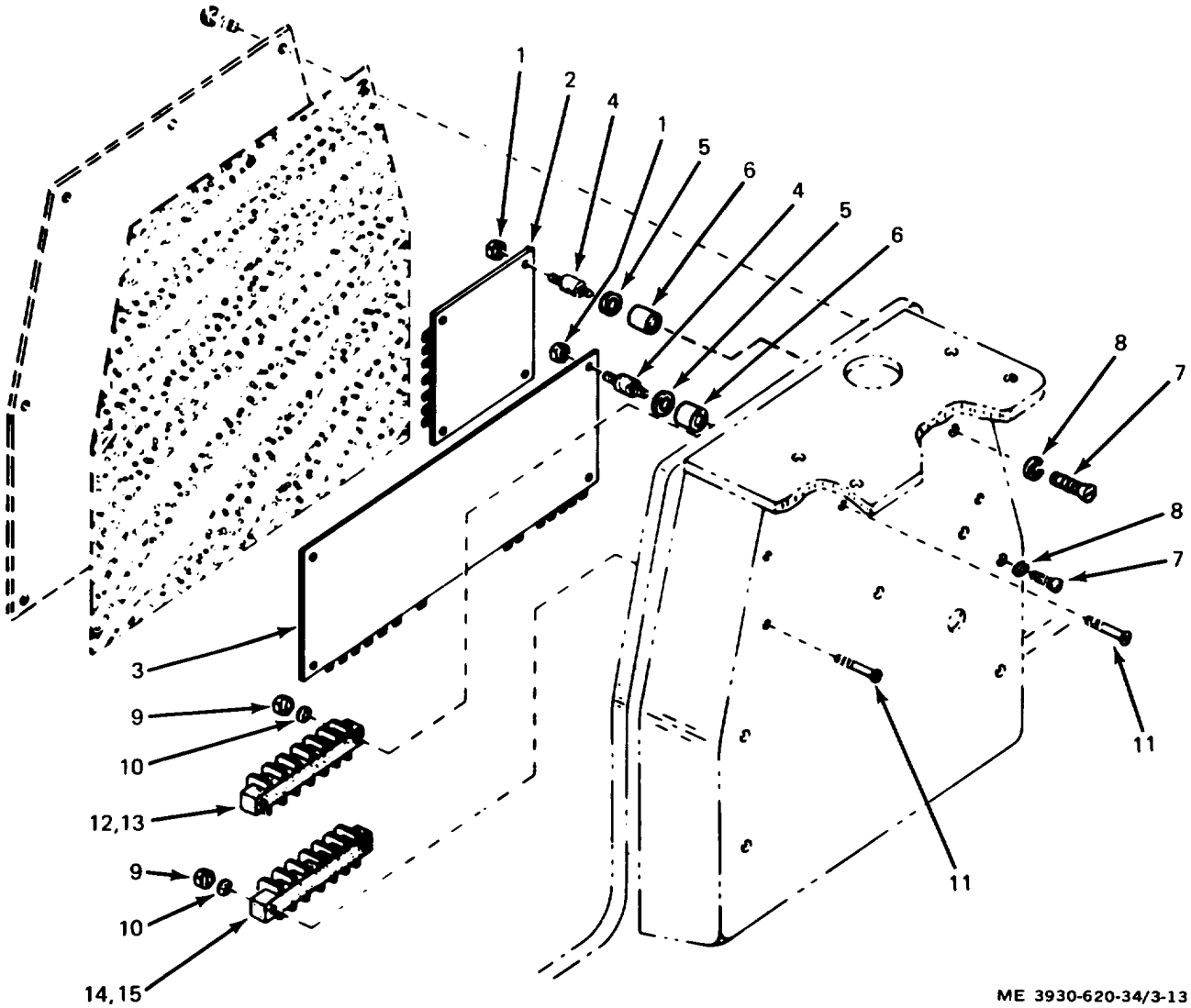

KEY to fig. 3-13:

1. Nut (9)
2. Protective circuit board
3. Control unit
4. Flexible mounting
5. Washer
6. Spacer
8. Lock washer
9. Nut (4)
10. Lock washer (4)
11. Screw (4)
12. Terminal block
13. Marker strip
14. Terminal block
15. Marker strip

Figure 3-13. Control compartment, exploded view

f. Installation.

(1) Position the control unit on the studs of the flexible mountings (4. fig. :3-13) and install the nuts (1)

(2) Reconnect the wiring.

3-8. Resistor Assembly

a. Removal.

(1) Disconnect battery and discharge capacitors (para 2-5).

(2) Tag and disconnect the leads and remove the attaching nuts, lock washers, and screws. (fig. 3-14)

(3) Clean off old silicone grease from the mounting surface of the resistor assembly and truck.

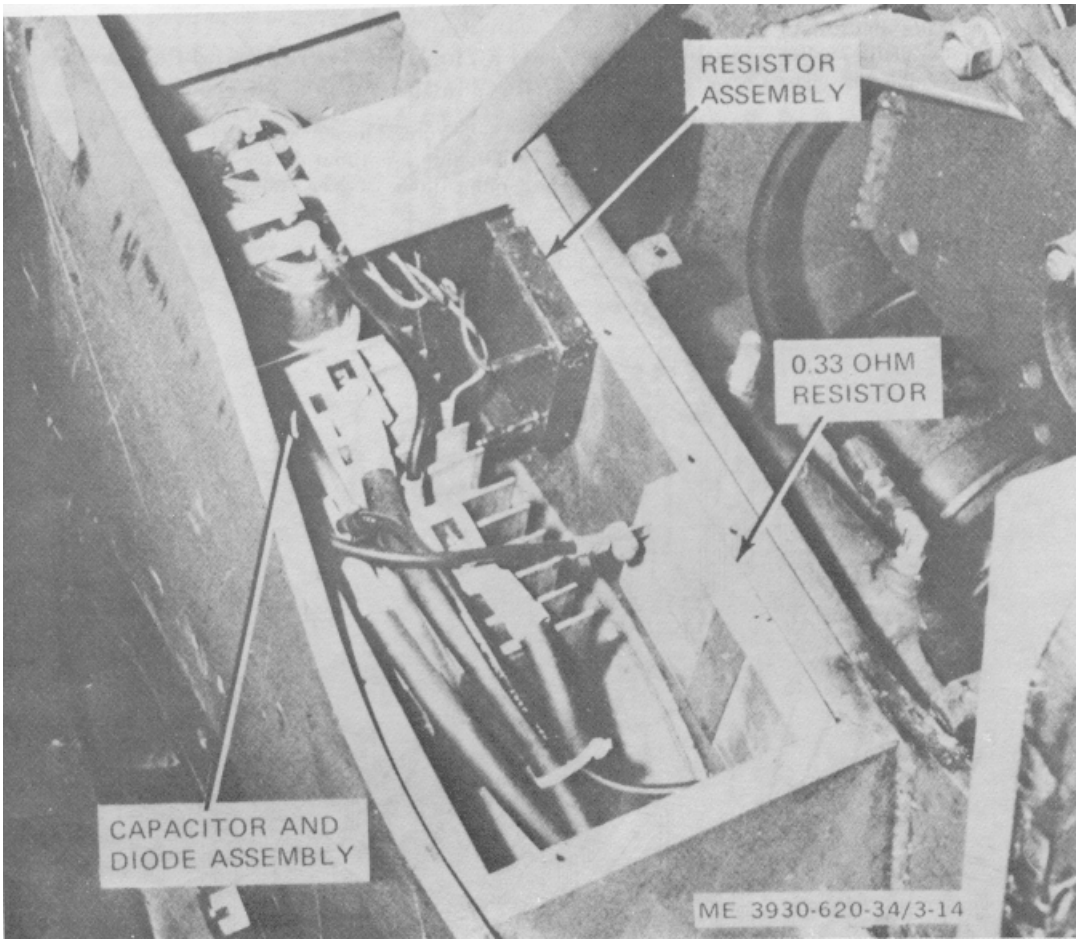

Figure 3-14. Capacitor and diode assembly compartment

b. Inspection. Inspect for evidence of damage, overheating, or warping. Inspect around terminals and case for cracks.

c. Resistance Test.

(1) Use ohmmeter to measure for zero ohms between the two terminals numbered 8.

(2) Measure from one terminal 8 to each other terminal, as indicated below. Each resistance value has a tolerance of ±5 %

Terminal	*Resistance*
2	6 Ohms
4	55 Ohms
6	25 Ohms
7	33 Ohms

d. Breakdown Test. Using an insulation break-down tester, make a high-potential test from case to each terminal. Test at 1000 volts ac for one minute. There should be no current leakage.

e. Installation. Apply silicone grease to the mounting surface of the resistor assembly and the truck. (fig. 3-17.) Install using the screws, lock washers, and nuts and reconnect the leads.

3-9. Power Switch Assembly

a. General.

(1) Open the power switch cover (TM 10-3930-620-12).

(2) Power should be kept off for all of the following procedures except for the voltage test of subparagraph d. Disconnect battery and discharge capacitors (para 2-5).

b. Inspection.

(1) Inspect for dust, dirt, and other foreign material in the compartment. Pay particular attention to the areas between the fins of the heat sinks. Clean using a vacuum cleaner and brush.

(2) Examine for ant evidence of overheating, frayed or cracked spires, bulging. or discoloration.

c. Resistance Tests. Use an ohmmeter to check continuity and to measure resistance, as indicated below. Reconnect each lead and fuse after checking. (fig. 3-15)

(1) Remove one end of each accessible wire lead and check for continuity (zero ohms resistance).

Note. For the wire leads that are not accessible. Check their continuity after removal of the switch assembly. Unless the trouble is found in the following tests.

(2) Remove each fuse (5 and 6) and check for continuity.

(3) Disconnect the center lead of each encapsulated resistor 33 by removing the screw (17) lock washer (18) and flat washer (19). Check for continuity of each resistor.

Note. The encapsulated resistor has a resistance of 0.036 ohms. Without the use of a milliohmmeter, however, this should appear as zero ohms

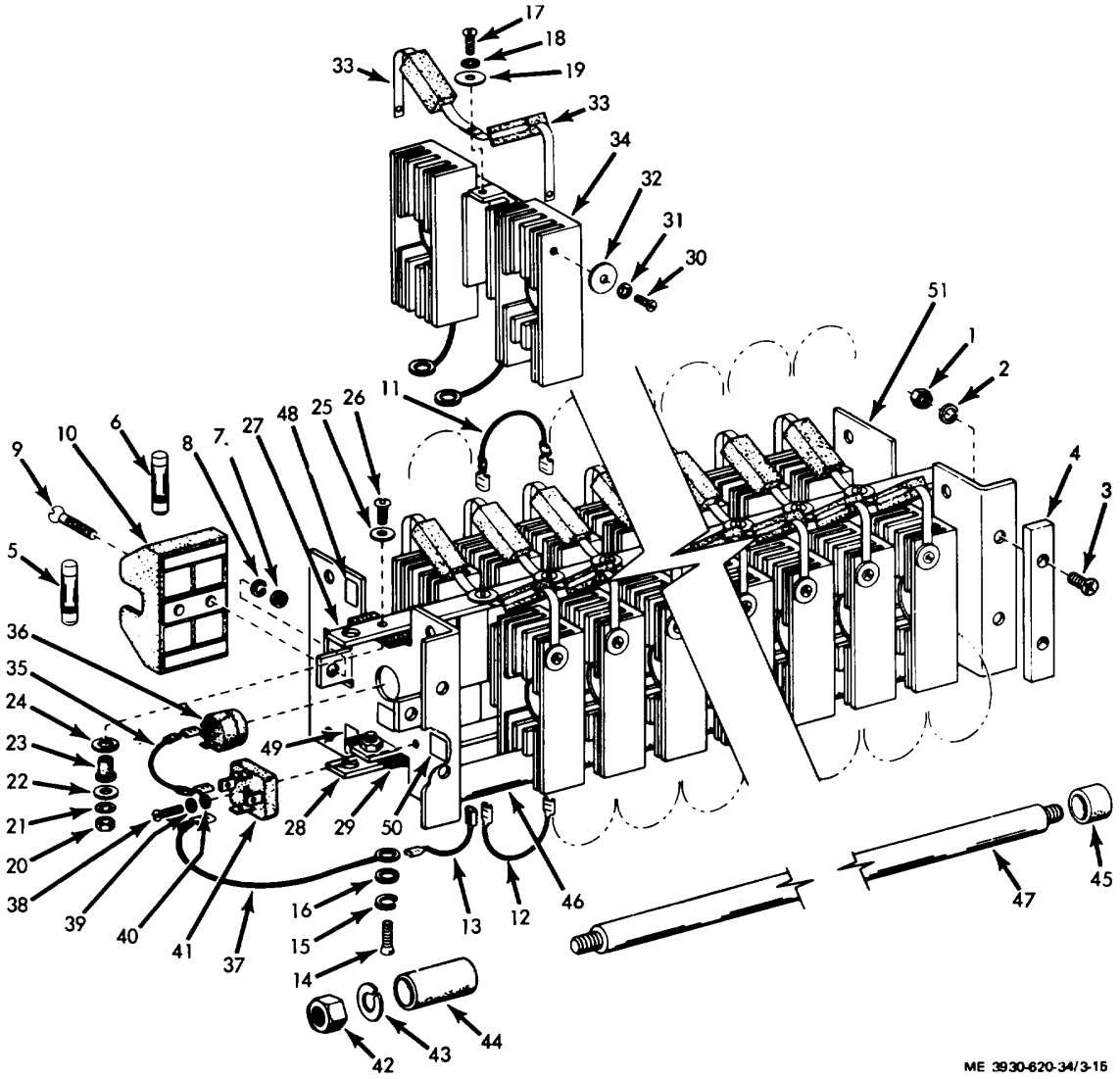

1. Nut
2. Lock washer
3. Screw
4. Insulator (2)
5. Fuse, 10A
6. Fuse, 5A
7. Nut
8. Lock washer
9. Screw
10. Fuse block
11. Flexible lead (11)
12. Flexible lead (22)
13. Flexible lead (3)
14. Screw (12)
15. Lock washer (12)
16. Flat washer (2)
17. Screw (2)
18. Lock washer (12)
19. Flat washer (12)
20. Nut (4)
21. Lock washer (4)
22. Flat washer *4)
23. Insulating bushing (4)
24. Nylon washer (4)
25. Flat washer (4)
26. Screw (4)
27, Bus bar
28. Bus bar
29. Bus bar insulator (4)
30. Screw (24)
31. Lock washer (24)
32. Flat washer (24)
33. Encapsulated resistor (24)
34. Power switch module (12)
35. Flexible lead (2)
36. Terminal bushing
37. Flexible lead
38. Screw
39. Lock washer
40. Flat washer
41. Diode bias block
42. Nut (4)
43. Lock washer (4)
44. Spacer (24)
45. Spacer (2)
46. Spacer (2)
45. Mounting rod (2)
48. Marker, A1
49. Marker, B2+
50. Marker, 1
51. End plate (2)

Figure 3-15. Power :switch assembly. exploded view.

(4) Disconnect the lead to the A1 bus bar (27) by removing the nut, lock washer, flat washer, and screw. Connect the positive ohmmeter lead to the A1 bus bar and the negative lead to the B2+ bus bar (28). The ohmmeter should read about 70 ohms. Zero ohms indicates a short circuit within the switch assembly. (one or more shorted transistors.)

To locate a shorted transistor:

(a) Remove the screw (30), lock washer (31), and flat washer (32) attaching the encapsulated resistor to the heat sink of the module (34). Do this for each module, one on each side, one at a time, until the reading on the ohmmeter is normal. The last module disconnected is shorted.

(b) To check for additional shorted transistors, momentarily touch each disconnected resistor lead to the heat sink, one at a time. A zero ohm reading indicates a shorted transistor in that module also.

d. Voltage Test. This test verifies that the diode bias block is functional.

(1) Connect battery and turn the key switch on.

(2) Connect voltmeter negative lead to the B2+ bus bar (28, (fig. 3-15) for this test. Measure voltage by touching the positive lead to the point indicated.

(3) Measure for 4.5 to 5.5 volts at diode bias block terminal 4. (fig. 3-16.)

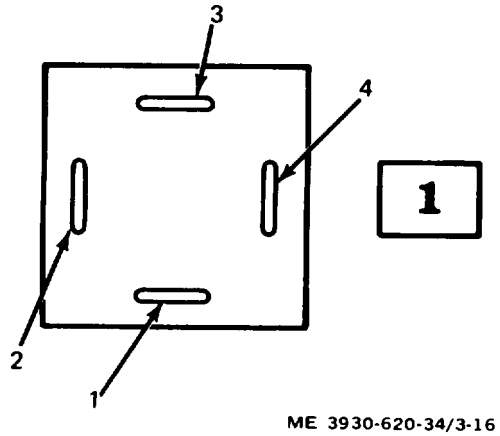

Figure 3-16. Diode bias block terminal identification

(4) If the voltage is incorrect, verify that the control unit is functioning by disconnecting the lead to the bias block terminal 4 and measuring at the lead. It should measure about 15 volts.

(5) Reconnect the lead. Measure for 1.5 volts ±10% at bias block terminal 2.

(6) Measure for 3 volts ±10% at bias block terminal 3.

e. Removal. Remove the power switch assembly according to paragraph 2-7.

f. Disassembly.

(1) Disassemble the power switch assembly according to figure 3-15. A single or all power switch modules can be removed as follows.

(a) Disconnect push-on leads (11, 12, and 13) from top and bottom of module.

(b) Remove screw (14), lock washer (15), and flat washer (16) connecting emitter lead of module to emitter bus bar (28).

(c) Remove screw (17), lock washer (18), and flat washer (191 connecting each encapsulated resistor to collector bus bar (27).

(d) Remove nylon screw (26) and associated parts connecting each end of collector bus bar (27) to end plates (51).

(e) Slide collector bus bar out of assembly.

(f) Loosen nuts (421 at both ends of insulated mounting rods sufficiently to allow removal of desired module (34).

(2) Disassemble the individual power switch modules according to figure 3-17.

.

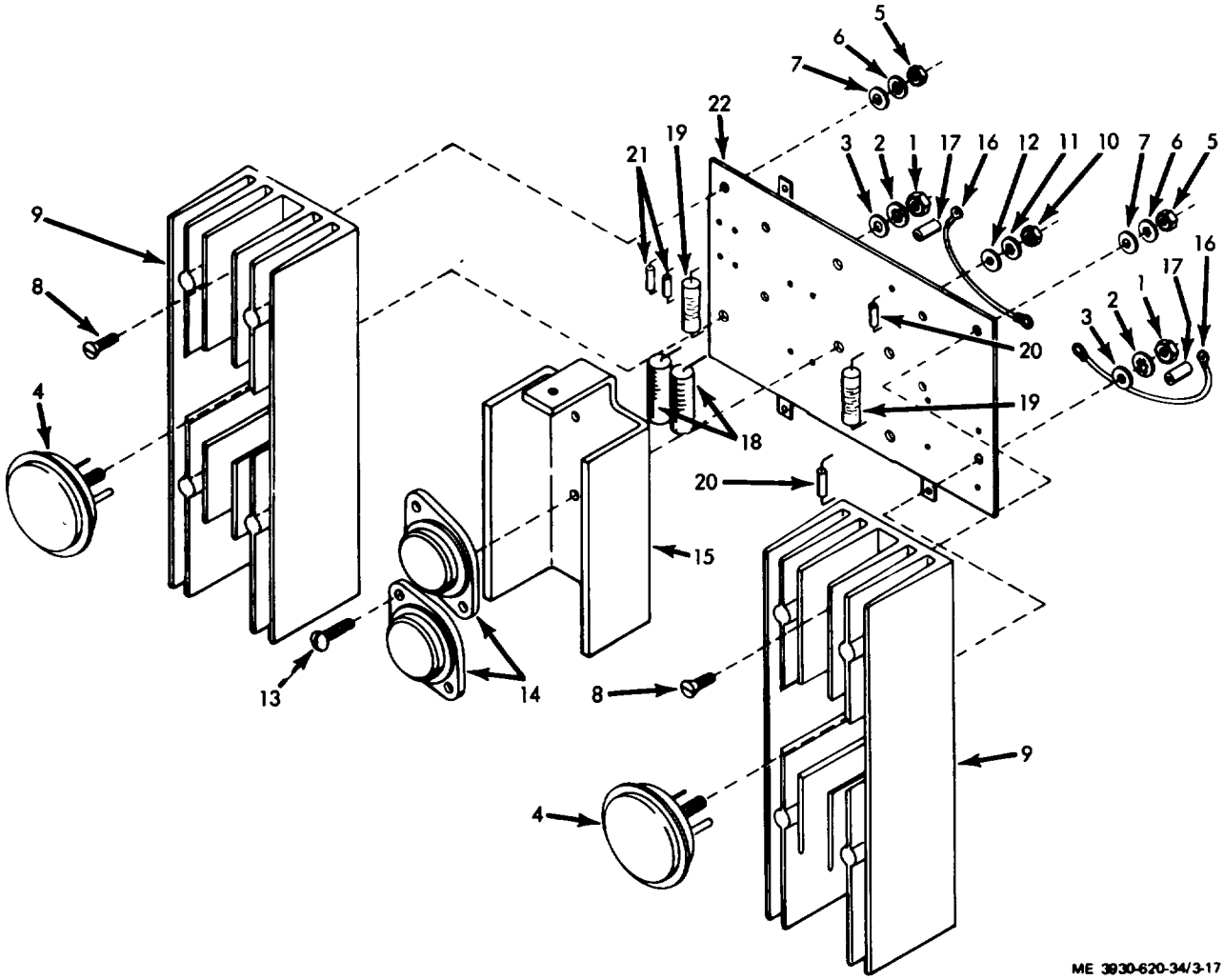

1. Nut (2)
2. Lock washer (2)
3. Washer (2)
4. T'ransist4or (2)
5. Nut (2)
6. Lock washer (2)
7. Washer (2)
8. Screw(2)
9. Heat sink (2)
10. Nut (4)
11. Lock washer (4)
12. Washer (4)
13. Screw (4)
14. Transistor (2)
15. Heat sink
16. Lead (2)
17. Spacer (2)
18. Resistor.0.3 ohm (2)
19. Resistor 22 ohm (2)
20. Resistor 100 ohm (2)
21. Resistor 220 ohm (2)
22. Printed wiring board

Figure 3-17. Power switch module, exploded view.

g. Transistor Tests

(1) To determine a shorted or open condition, use an ohmmeter to test each power and drive transistor, as follows: (fig. 3-18.)

Negative Lead	*Positive Lead*	*Resistance*
Emitter	Collector	High resistance
Collector	Emitter	High resistance
Base	Emitter	Low resistance
Emitter	Base	High resistance
Base	Collector	Low resistance
Collector	Base	High resistance

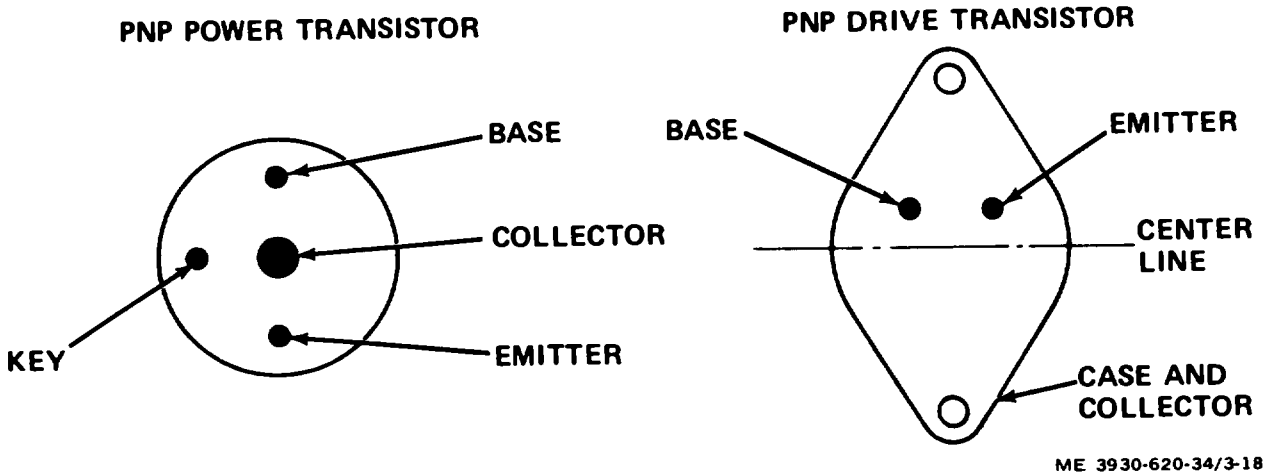

Figure 3-18. Transistor terminal identification

(2) To determine transistor leakage, check on a transistor checker.

h. Diode Bias Block Test. Check each diode in the diode bias block for forward and backward resistance using an ohmmeter. (fig. 3-1 and 3-16.) Backward resistance must be about 10 times higher than forward resistance.

i. Inspection of parts.

(1) Inspect all parts for general condition and signs of overheating and oxidation.

(2) Check electrical leads for frayed or deteriorated condition.

(3) Check printed wiring board for cracks or other damage. If in doubt, check printed wiring for continuity.

(4) Measure board mounted resistors and encapsulated resistors using an ohmmeter and milliohm meter.

j. Reassembly.

(1) Reassemble an individual power switch module in the reverse of the order shown in figure 3-17.

Note. Use silicone grease between the transistors and their heat sinks when assembling.

(2) Reassemble the power switch assembly in the reverse of the order shown in figure 3-15, and as follow s.

(a) Assemble power switch modules on mounting rods 147) between end plates. Position spacers (44) between power switch modules.

(b) Tighten nuts (42) at both ends of insulated mounting rods.

(c) Position collector bus bar (27) under encapsulated resistors (33) and on top of modules.

(d) Align holes in collector bus bar and install and tighten attaching hardware terminal identification.

(e) Reconnect encapsulated resistors on collector bus bar and emitter leads on emitter bus bar (28).

(f) Reconnect all electrical leads and check for possible wiring errors.

3-10. Capacitor and Diode Assembly

a. Inspection.

(1) Inspect the capacitor and diode assembly for dust, dirt, and other foreign material. (fig. 3-14.) Pay particular attention to the areas between the fins of the heat sinks.

(2) Check for any evidence of damage such as capacitor leakage, overheating, and arcing.

b. Test. Test the capacitor and diode assembly using an ohmmeter. Disconnect battery and discharge capacitors (para2-5I. Tag and disconnect all leads coming to terminals Al, A2, B2-, and B2+. (fig. 3-19.) Reconnect the leads after the test.

(1) Measure forward resistance of diode D 1 by connecting ohmmeter between terminals Al (-lead) and B2- (+lead). Note reading.

(2) Measure D1 backward resistance by reversing the connections. Backward-to-forward resistance ratio should be at least 10 to 1.

(3) Measure forward resistance of diode D2 by connecting ohmmeter between terminals Al (-lead) and A2 (+ lead). Note reading.

(4) Measure D2 backward resistance by reversing the connections. Backward-to-forward resistance ratio should be at least 10 to 1.

(5) Disconnect the D3 lead from the capacitors.

(6) Measure forward resistance of diode D3 by connecting ohmmeter between terminal Al (- lead) and the D3 lead (+ lead). Note reading.

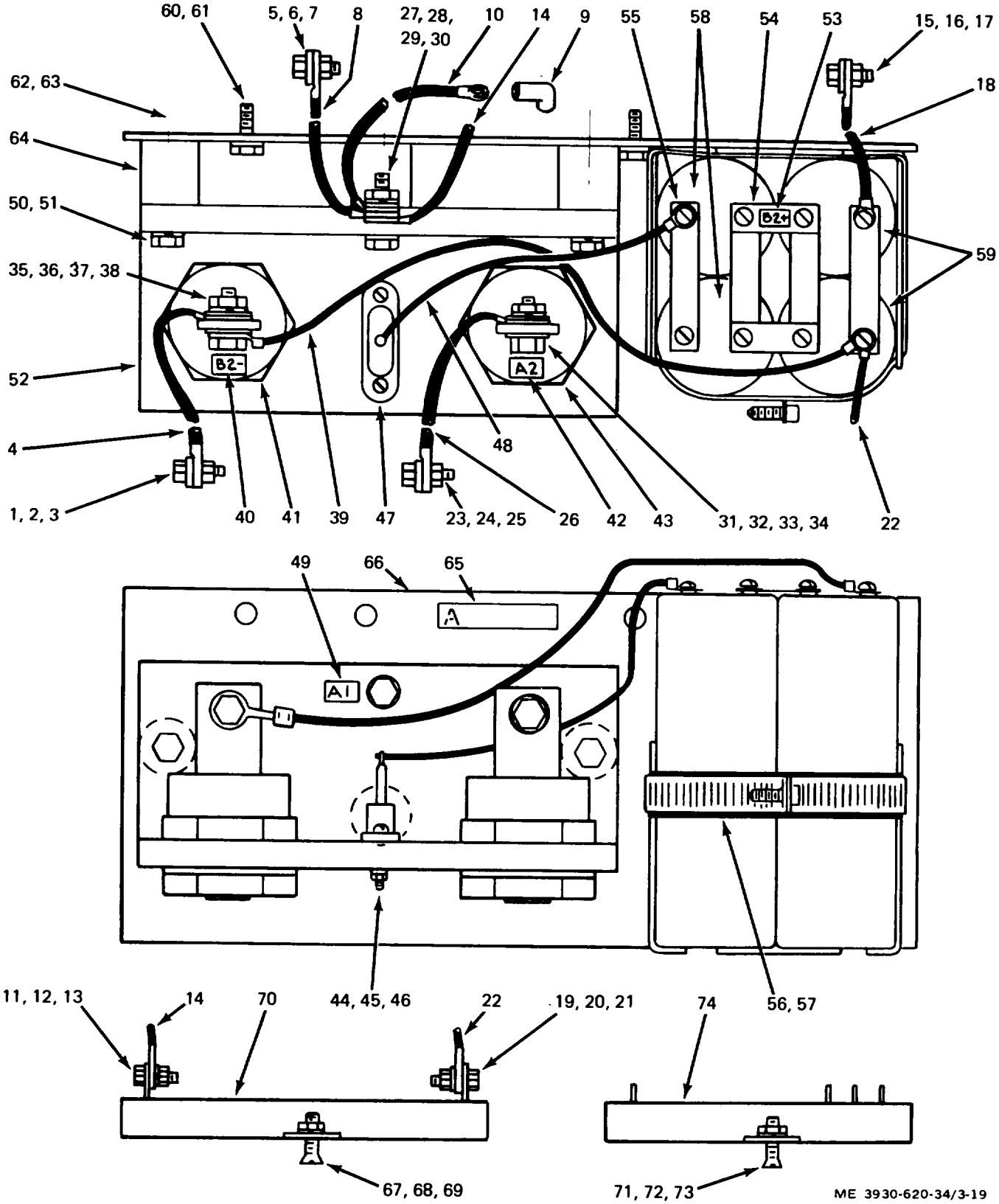

Figure 3-19. Capacitor and diode assembly with resistor assemblies.

KEY to fig 3-19:

1. Screw
2. Washer
3. Nut
4. Lead
5. Screw
6. Washer
a. Nut
8. Lead
9. Cable nipple
10. Lead
11. Screw
12. Washer
13. Nut
14. Lead
15. Screw
16. Washer
17. Nut
18. Lead
19. Screw
20. Washer
21. Nut
22. Lead
23. Screw
24. Washer
25. Nut
26. Lead
27. Nut
28. Lock washer
29. Washer (2)
30. Screw
31. Nut
32. Lock washer
33. Washer (2)
34. Screw
35. Nut
36. Lock washer
37 Washer (2)
38. Scre%w
39. Flexible lead
40. Marker.B2-
41. Diode
42. Marker A2
43. Diode
44. Nut (2)
45. Lock washer (2)
46. Screw (2)
47. Diode
48. Flexible lead
49. Marker.A1
50. Screw (3)
51. Lock washer (3)
52. Diode support
53. Marker, B2+
54. Link, short (2)
55. Link, long (4)
56. Clamp
57. Weather strip
58. Capacitor, 1000 μF (2)
59. Capacitor, 5500 μF (2)
60. Screw (2)
61. Lock washer (2)
62. Screw 131
63. Lock washer (3)
64. Standoff insulator (3)
65. Label
66. Base assembly
67. Nut (2)
68. Lock washer (2)
69. Screw (2)
70. Resistor assembly
71. Nut (2)
72. Lock washer (2)
73. Screw (2)
74. Resistor assembly

(7) Measure D3 backward resistance by reversing the connections. Backward-to-forward resistance ratio should be at least 10 to 1.

(8) Test the capacitors as follows:

(a) Connect the positive ohmmeter lead to terminal B2+.

(b) Touch the negative ohmmeter lead to the left-most capacitor terminals, and then to the right-most terminals.

(c) In each case, the meter pointer should swing toward zero and then rise.

(9) Reconnect the D3 lead to the capacitor connection.

c. Removal.

(1) Tag and disconnect all leads coming to terminals Al, A2, B2-, and B2+.

(2) Remove the two screws (60) and lock washers (61)1.

d. Disassembly. Disassemble by following the sequence of figure 3-19.

e. Inspection of parts.

(1) Visually inspect all parts for evidence of damage, including terminals and wire leads. Pay particular attention to the mating surfaces of the diode support (52, fig. 3-19) and diodes. Clean off the old silicone grease on these surfaces.

(2) Check capacitors for cracks and electrolyte leakage.

(3) Check wire leads for continuity using ohmmeter.

f. Reassembly. Reassemble in the reverse order of figure 3-19. Be sure that weatherstrip (57) is under adjustable metal clamp (561.

Note. Silicone grease must be applied to the mating surfaces between the diode support (52) and diodes l, D2, and D3.

g. Installation. Install the capacitor and diode assembly using the two screws (60, fig. 3-19) and lock washer (61). Reconnect leads.

3-11. Protective Circuit

a. Test.

(1) Use cardboard to insulate all forward and reverse contacts in the contactor unit (except EC contactor).

Note. Seat must be depressed and emergency stop switch released.

(2) Connect voltmeter positive lead to terminal B+ and the negative lead to terminal 35 of the protective circuit. (fig. 3-12.) Select a voltage range higher than the battery voltage.

(3) Turn the key switch on. The voltmeter

should read 2 to 2.5 volts, indicating the protective circuit is not tripped. If the full battery voltage is read, the circuit is tripped and must be reset before continuing.

(4) Make the voltage measurements of table 3-1

caution: For measurements with the accelerator pedal down, proceed as rapidly as p1ossibltl to avoid burning out the 10 ohm resistor in the contactor unit.

Table 3-1. Protective Circuit Voltage Tests

Voltmeter lead connection		Select direction		Accelerator pedal		Voltage reading
Positive (Red)	Negative (Black)	Yes	No	Up	Down	
B+	33		X	X		Full battery voltage
B+	34		X	X		Full battery voltage
B+	34	X		X		Less than 5 volts
31	B+	X		X		3 volts
B+	31	X			X*	5 volts
B+	36	X			X*	Full battery voltage

* Do not hold accelerator pedal In the down position These test should be accomplished as rapidly as possible

b. Trouble Analysis. If all of the voltages are correct, likely causes of trouble are as follows.

(1) Protective circuit trips when direction is selected due to:

(a) Defective control unit-low bias.

(b) Defective power switch-open emitter, shorted base to collector.

(c) Improper turn-on sequence.

(2) Protective circuit trips when pedal is depressed only far enough to operate microswitch due to:

(a) Open or intermittent 10 ohm resistor in contactor unit.

(b) Shorted power switch.

(3) Protective circuit trips when pedal is depressed far enough to generate a drive signal due to:

(a) Defective control unit-low drive.

(b) Open, intermittent, or wrong value in resistor assembly.

c. Removal. Tag and disconnect the leads and remove according to figure 3-13.

d. Installation. Install the protective circuit according to the reverse of removal.

3-12. Directional Control Switch

a. General. The directional control switch is a lever-operated, double-pole, double-throw switch with a center off position. Detents are provided to hold the switch in any of its three positions.

b. Removal. Remove the directional control switch according to paragraph 2-8.

c *Disassembly.* (fig. 3-20.)

(1) Squeeze contact finger assemblies (6) together, rotate 1/2 turn, and withdraw assemblies and contact finger spring (7).

(2) Remove screws through terminal board assemblies (8 and 9) and remove assemblies.

(3) Unhook handle springs (10) from pins and remove.

(4) Remove screws holding clips (11) and remove clips and arms.

(5) Remove screw and washers holding carrier assembly and remove assembly.

(6) Remove operating shaft assembly (15), washer (16), and spacer (17).

d. Cleaning.

(1) Blow dust from parts with compressed air under moderate pressure.

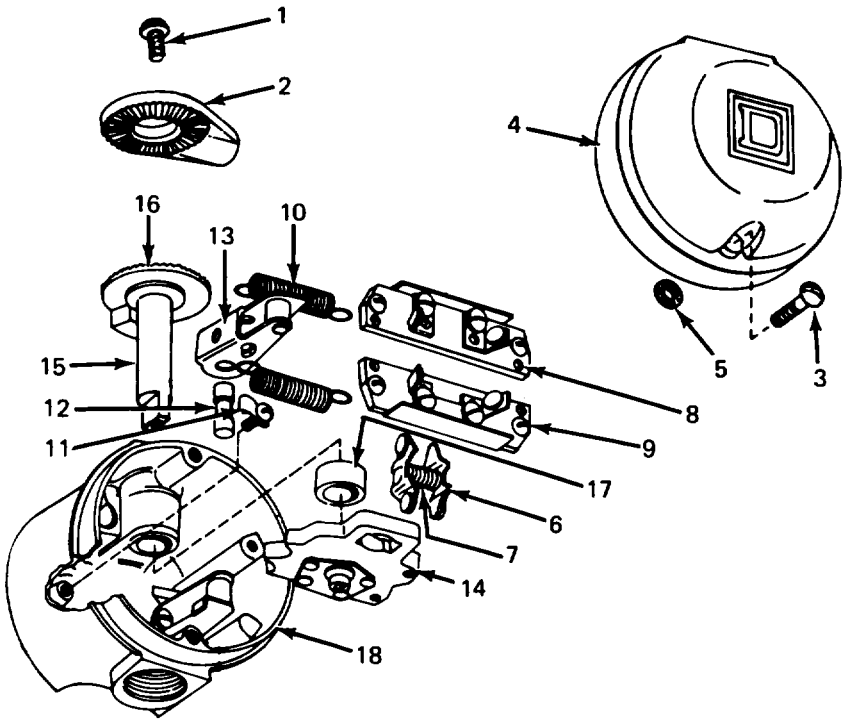

MF 3930-620-34/3-20

1. Screws
2. Lever end
3. Screws (2)
4. Cover
5. Washer (2)
6. Contact finger assembly (2)
7. Contact finger spring
8. Terminal board assembly
9. Terminal board assembly
10. Handle spring (2)
11. Clip (2)
12. Hinge pin (2)
13. Roller arm assembly (2)
14. Carrier assembly
15. Shaft assembly
16. Special washer
17. Spacer
18. Housing assembly

Figure 3-20. Directional control switch. exploded view.

(2) If additional cleaning is required, wash parts in a dry type solvent and dry with compressed air.

e. Inspection.

(1) Inspect threaded parts and tapped holes for stripped threads or other thread damage.

(2) Inspect cover, housing, lever, arms, clips, carrier, contact fingers, and terminal boards for cracks, distortion, corrosion, and other damage.

(3) Inspect contacts on terminal boards and on contact fingers for pitting, burning and other dam age.

(4) Inspect springs for excessive stretch.

f. Repair.

(1) Repair minor thread damage with a tap or thread chaser.

(2) Replace all cracked, distorted, or corroded parts.

(3) Replace springs if damaged in any way.

(4) Replace terminal boards and contact fingers if contacts are pitted or burned.

g. Reassembly. Reassemble the switch in the reverse order of disassembly.

3-13. Thermal Relay

a. Removal.

(1) Disconnect battery and discharge capacitors para 2-5).

(2) Tag and disconnect the two wires attached to the thermal relay. (fig. 3-21.)

(3) Remove the two screws (or nuts), lock washers, washers, and the clamp.

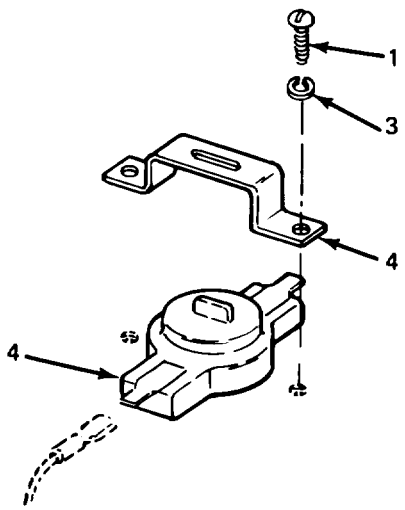

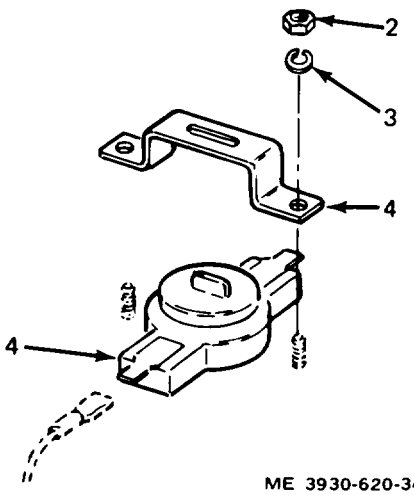

ME 3930-620-34/3-21

1. Screw (6)
2. Nut (4)
3. Lockwasher (10)
4. Termal relay (5)

Figure 3-21. Thermal relay removal and installation.

b. Test.

(1) Use an oven and thermometer capable of 107°C (225°F).

(2) Fabricate extension leads for the ohmmeter using thin, insulated wire.

(3) Place the thermal relay in the oven with the extension leads connected. The ohmmeter should indicate zero.

(4) Increase the oven heat, observing temperature using the ohmmeter. When the relay opens, the ohmmeter indication changes from zero to infinity. The relay must open between 102° and 107°C (213° and 225°F).

(5) Decrease the heat, observing temperature and ohmmeter. When the relay closes, the ohmmeter indication changes from infinity to zero. The relay must close between 95° and 104°C (203° and 219°F).

c. Installation.

(1) Mount the thermal relay using the clamp and attaching hardware. (fig. 3-21.)

(2) Push the two wires onto the relay terminals (either wire to either terminal).

3-14. Shunt

a. Disassembly.

(1) Tag the electrical wires and cables of the shunt.

(2) Disassemble the shunt as shown in figure 3-22

KEY to fig. 3-22.

1. Screw (2)
2. Lock washer (2)
3. Washer (2)
4. Nut
5. Lock washer
6. Washer
7. Lead
8. Lead
9. Cable nipple
10. Nut
11. Lock washer
12. Washer
13. Lead
14. Clamp (2)
15. Shunt
16. Spacer (2)
17. Stud (2)
18. Screw (2)
19. Lock washer (2)
20. Standoff insulator (2)
21. Insulator

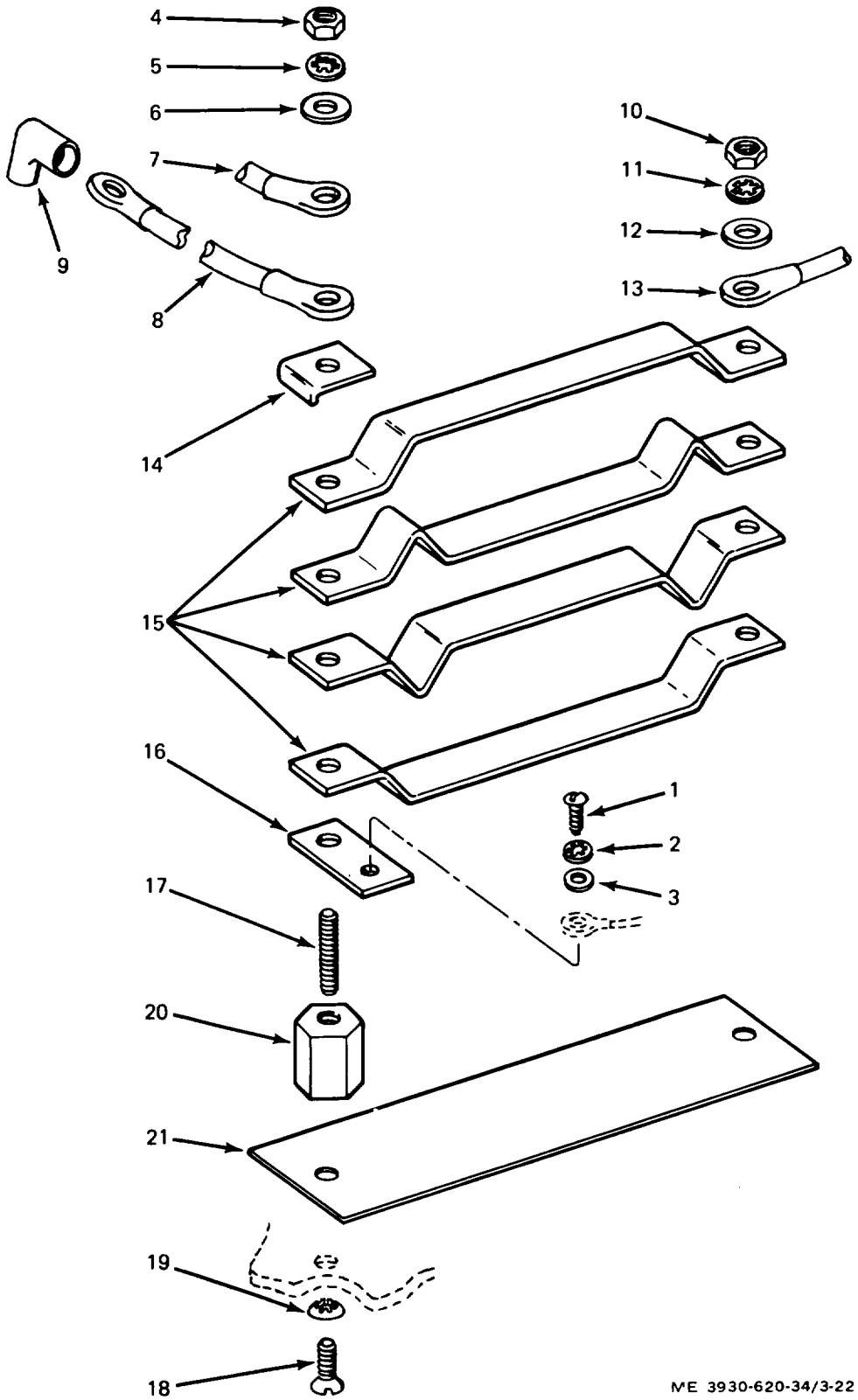

Figure 3-22. Shunt, exploded view.

b. Inspection.

(1) Inspect the shunt elements for damage, overheating, and dirty contact surfaces.

(2) Inspect the standoff insulators for cracking, dirt, and grease.

(3) Clean or replace parts as necessary.

c. Reassembly. Reassemble the shunt in the reverse order of that shown in figure 3-22. Insure that cables and wires are reconnected correctly according to the tagging and as shown in figure 3-22.

3-15. Battery Connector

a. Removal. Remove the battery connector (TM 10-3930-620-12).

b. Disassembly. Disassemble connector as shown in figure 3-23. Do not disassemble the contacts from the cables unless necessary. If necessary, unsolder the contacts using an LP torch.

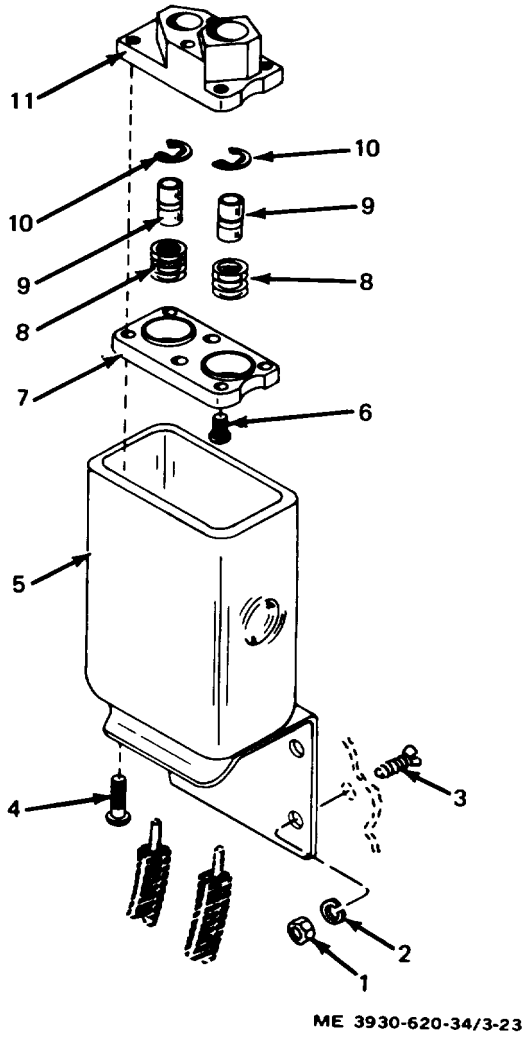

Figure 3-23. Battery connector, exploded view.

KEY to fig. 3-23:

1. Nut (4)
2. Lock washer (4)
3. Screw (4)
4. Screw (2)
5. Body, mounting half
6. Screw (2)
7. Contact block, outer
8. Contact spring (2)
9. Contact (2)
10. Retaining ring (2)
11. Contact block, inner

c. Inspection. Inspect all parts for wear, cleanliness, damage, and corrosion. Check springs for tension.

d. Repair. Replace any defective parts. Springs, contacts, and retaining rings are replaced as a kit. Contact blocks and screws are replaced as a kit.

e. Reassembly. Reassemble connector in the reverse order of that shown in figure 3-23. Use an LP torch and rosin core solder to connect contacts to cables.

Section II. HYDRAULIC SYSTEM

3-16. Description (fig. 3-24)

The lift truck hydraulic system provides a means by which the lifting, tilting, and side shift are controlled. A motor-driven, gear-type hydraulic pump supplies the hydraulic oil pressure to operate hydraulic components. The hydraulic reservoir supplies hydraulic oil to the pump and also contains an oil reserve. Hydraulic oil is filtered through a 25 micron filter located in the return line between the oil reservoir and the control valve. The control valve directs the hydraulic oil, under pressure, to the appropriate cylinders.

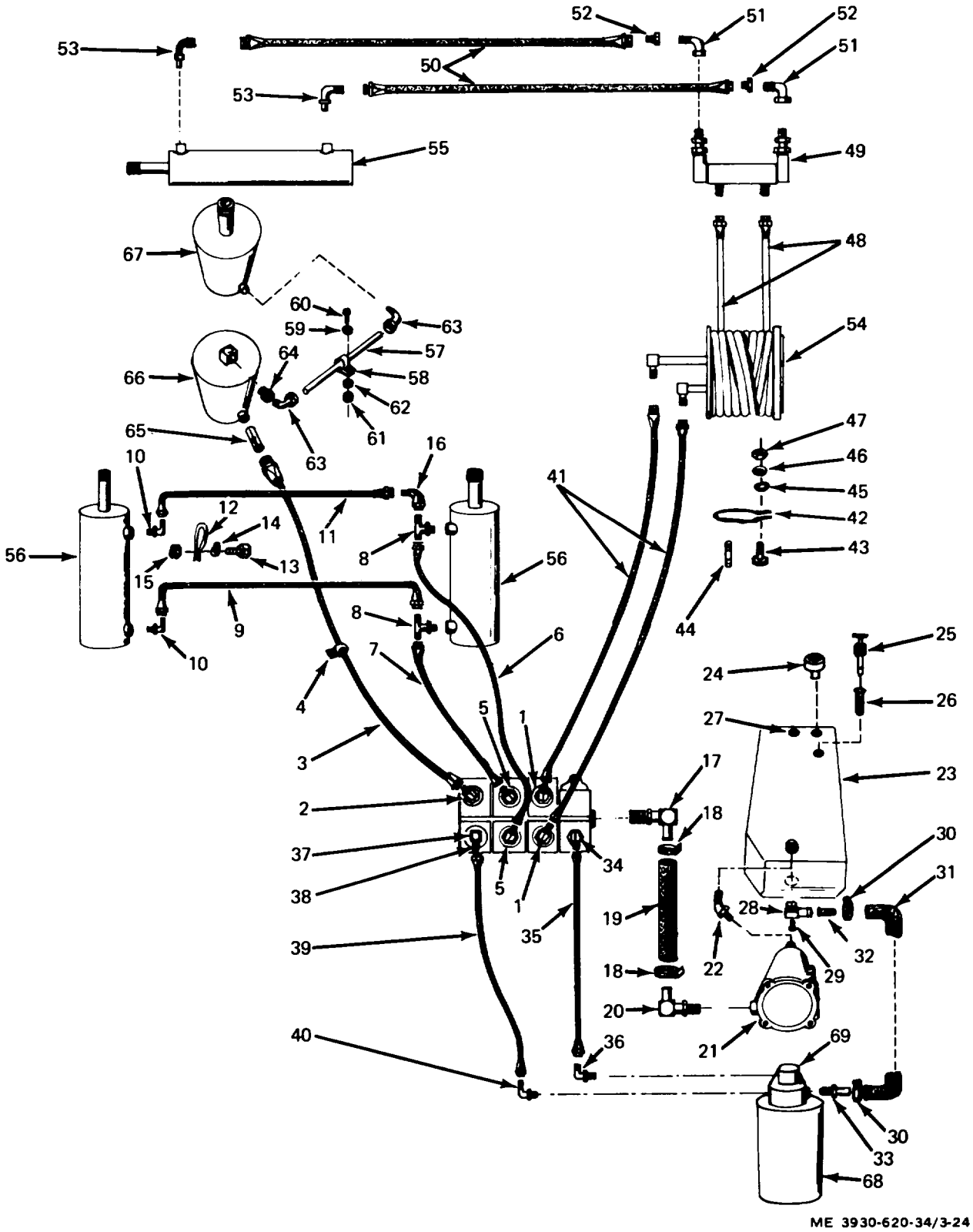

Figure 3-24. Hydraulic system, schematic diagram.

KEY to fig. 3-24

1. Elbow (2)
2. Elbow
3. Hose assembly
4. Hose clamp
5. Elbow (2)
6. Hose assembly
7. Hose assembly
8. Branch tee (2)
9. Hose assembly
10. Elbow (2)
11. Hose assembly
12. Hose clamp
13. Screw
14. Lock washer
15. Nut
16. Elbow
17. Elbow
18. Hose clamp (2)
19. Hose
20. Elbow
21. Filter
22. Elbow
23. Hydraulic oil reservoir
24. Breather
25. Level gage
26. Filler screen
27. Pipe plug
28. Elbow
29. Pipe plug
30. Hose clamp (2)
31. Hose
32. Strainer element
33. Adaptor
34. Elbow
35. Hose assembly
36. Elbow
37. Pipe plug
38. Elbow
39. Hose assembly
40. Elbow
41. Hose (2)
42. Loop clamp (3)
43. Screw
44. Stud (2)
45. Lock washer (3)
46. Washer (2)
47. Nut (3)
48. Hose (2)
49. Swivel fitting
50. Hose
51. Elbow (2)
52. Reducer (2)
53. Elbow (2)
54. Reel assembly
55. Side shift cylinder
56. Tilt cylinder assembly (2)
57. Tube
58. Clamp
59. Washer
60. Screw
61. Nut
62. Washer
63. Angle adaptor (2)
64. Bushing
65. Flow regulator
66. Secondary lift cylinder
67. Primary lift cylinder
68. Pump motor
69. Hydraulic pump

3-17. Hydraulic Oil Filter

The hydraulic oil filter is connected into the hydraulic oil reservoir return line. The filter assembly consists of a filter head, preformed packing, 25 micron filter element, and body. The 25 micron filter element is changed after the first 25 hours of use, after 100 hours of use, and at each 200 hour interval thereafter. A preset bypass valve is incorporated into the body. Hydraulic oil is allowed to bypass the element and flow (unfiltered) continuously if the element becomes blocked or clogged. Refer to TM 10-3930-620-12 for replacement.

3-18. Tilt Cylinder

a. Removal. Remove tilt cylinder (TM 10-3930-624-12).

b. Disassembly. (fig. 3-25.)

(1) Place the tilt cylinder in a vise. Extend the rod to its fully extended position.

(2) Using a spanner wrench, unscrew the gland nut (1) from the tube assembly (13).

(3) Secure the yoke (20) in a vise. Remove the bearing (11) and packing (12).

(4) Remove the nut (23), lock washer (22) and screw (21) and remove the yoke (20) from the rod.

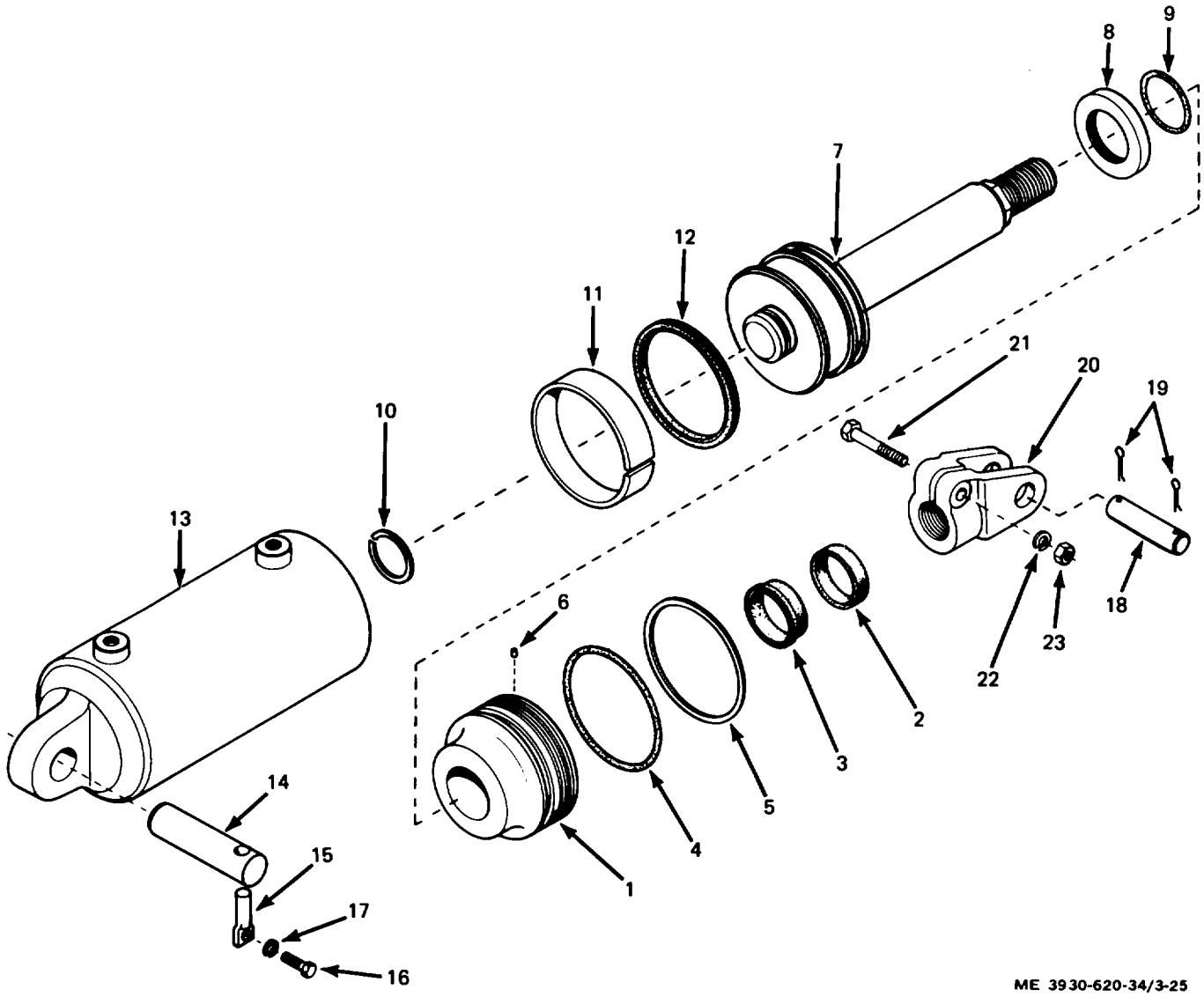

1. Gland nut
2. Wiper ring
3. Packing
4. Preformed packing
5. Anti extrusion ring
6. Nylon locking pellet (2)
7. Piston-rod assembly
8. Spacer ring (2)
9. Preformed packing
10. Retaining ring
11. Piston bearing
12. Packing assembly
13. Tube assembly
14. Pin
15. Pin
16. Screw
17. Lock washer
18. Pin
19. Cotter pin (2)
20. Yoke
21. Screw
22. Lock washer
23. Nut

Figure 3-25. Tilt cylinder, exploded view.

c. Cleaning, Inspection and Repair.

(1) Clean all parts with a cleaning solvent. Thoroughly flush the inside of the cylinder tube.

(2) Inspect the cylinder tube for dents, cracks, and other damage. Inspect the cylinder for score marks or nicks. Hone the cylinder tube to remove slight score marks. If the cylinder tube is badly scored, it must be replaced.

(3) Inspect the piston-rod assembly for nicks, scratches, burrs, wear, and other damage. Inspect the piston groove for rough spots. Remove any

rough spots in the grooves. Repair or replace the piston-rod assembly as necessary.

(4) Inspect all metal surfaces where packings or seals are located. If the surfaces are scored or nicked, replace the parts or resurface them.

d. Reassembly. (fig. 3-25.)

(1) Install all new rings and packings in the cylinder. Soak the packings in hydraulic oil before in stalling.

***Caution*: Do not use sharp tools or instruments when installing packings. When installing rings, do not stretch them more than absolutely necessary.**

(2) Install the gland nut (1) on the piston-rod assembly (7). Screw the yoke (20) on the rod and secure in place with the screw (21), lock washer (22), and nut (23).

(3) Lightly lubricate the wiper ring (2) with hydraulic fluid and install the assembly into the tube assembly (13).

(4) Tighten the gland nut with a spanner wrench until the face of the nut is flush with the outer end of the tube assembly.

3-19. Primary Lift Cylinder

a. Removal. Remove the primary lift cylinder according to paragraph 2-17.

b. Disassembly.

(1) Place the cylinder assembly in a bench vise and drain any remaining oil.

(2) Remove the packing nut (1, fig. 3-26) from the tube assembly (11). Remove the wiper ring (31, preformed packing (4 and 5), and backup ring (6).

(3) Using a spanner wrench, remove the stop ring (7).

(4) Remove the plunger assembly (8) and bearing (9) from the tube assembly (11).

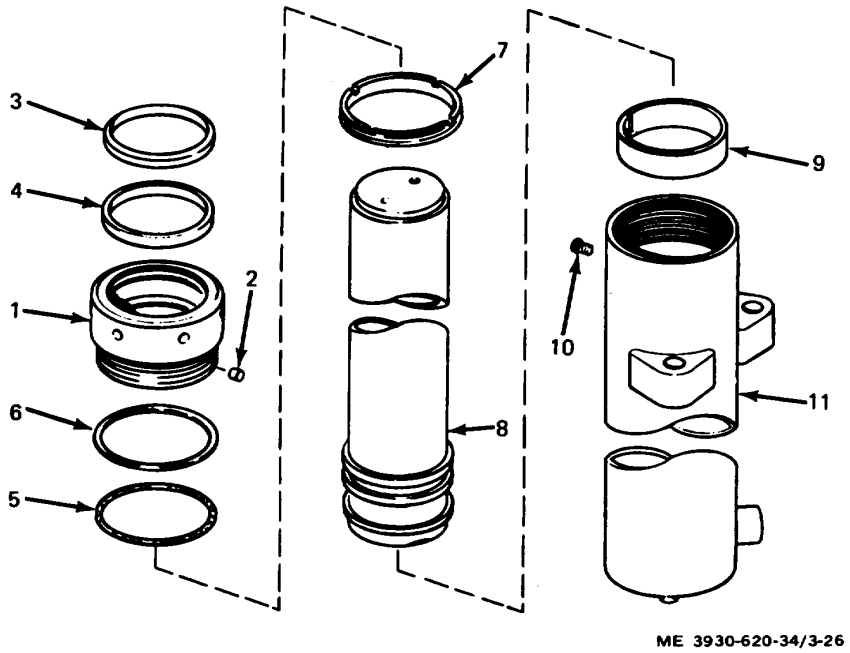

1. Packing nut
2. Nylon insert (2)
3. Wiper ring
4. Preformed packing
5. Preformed packing
6. Backup ring
7. Stop ring
8. Plunger assembly
9. Bearing
10. Bleed screw
11. Tube assembly

Figure 3-26. Primary lift cylinder, exploded view.

c. Cleaning, Inspection and Repair.

(1) Clean all metallic parts with cleaning solvent.

(2) Discard all preformed packings.

(3) Inspect the plungers, packing nut, bearing, and tube assembly for cracks, nicks, scores, dents, wear on the sliding surfaces, stripped threads, and other damage which may cause internal or external leakage.

(4) Replace all defective parts.

d. Reassembly.

(1) Place tube assembly (11, fig. 3-26) in a vise. Be careful not to tighten excessively as this will deform the tube.

(2) Install tile bearing (91 on the lower end of the plunger assembly (8).

(3) Carefully install the plunger assembly into the tube assembly).

(4) Install the stop ring (7) and tighten with a spanner wrench.

(5) Place the backup ring (6) and a new preformed packing (5) on the packing nut (1).

(6) Install the wiper ring (3) and the packing (4) in the packing nut.

(7) Install the packing nut into the assembly.

3-20. Secondary Lift Cylinder

a. Removal. Remove the secondary lift cylinder according to paragraph 2-18.

b. Disassembly.

(1) Place the cylinder in a vise. Unscrew the inner packing nut (1, fig. 3-27) to remove it and its attached parts.

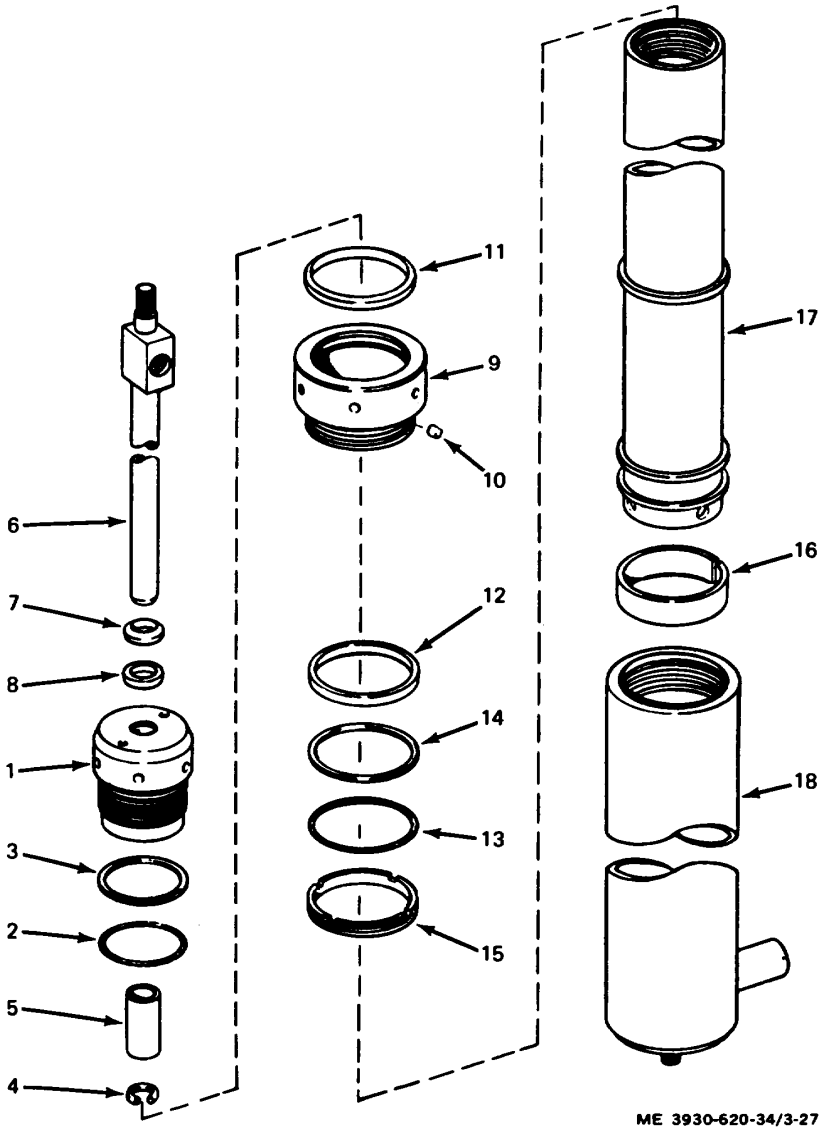

1. Inner packing nut
2. Preformed packing
3. Backup ring
4. Retaining ring
5. Bearing
6. Inner tube assembly
7. Wiper ring
8. Preformed packing
9. Outer packing nut
10. Nylon insert (4)
11. Wiper ring
12. Preformed packing
13. Preformed packing
14. Backup ring
15. Stop ring
16. Bearing
17. Plunger assembly
18. Tube assembly

Figure 3-27. Secondary lift cylinder, exploded view.

(2) Remove the retaining ring (4) and separate the inner tube assembly (6), wiper ring (7), bearing (5), backup ring (2), and preformed packing (2 and 8).

(3) Unscrew the outer packing nut (9) and separate the wiper ring (11), backup ring (14), and preformed packing (12 and 13).

(4) Using a spanner wrench, unscrew the stop ring (15).

(5) Lift out the plunger assembly (17) and remove the bearing (16).

c. Cleaning, Inspection and Repair.

(1) Clean all metallic parts with solvent.

(2) Inspect the tube and plunger assemblies, packing nuts, and bearings for cracks, nicks, scores, dents, excessive wear on sliding surfaces, stripped threads or other damage.

(3) Replace damaged parts as necessary.

d. Reassembly.

***Caution*: Be certain that all parts are clean and that there is no foreign matter in the tube assembly 118, fig. 3-27.**

(1) Place the tube assembly in a bench vise. Be careful not to apply excessive pressure which might deform the tube.

(2) Install the parts in the reverse order of disassembly. Do not overtighten packing nuts as leakage may result.

3-21. Side Shift Cylinder

a. Removal. Remove the side shift cylinder (TM 10-3930-620-12).

b. Disassembly.

(1) Remove retainer ring (1, fig. 3-28) securing spacer (2) in position, then remove spacer.

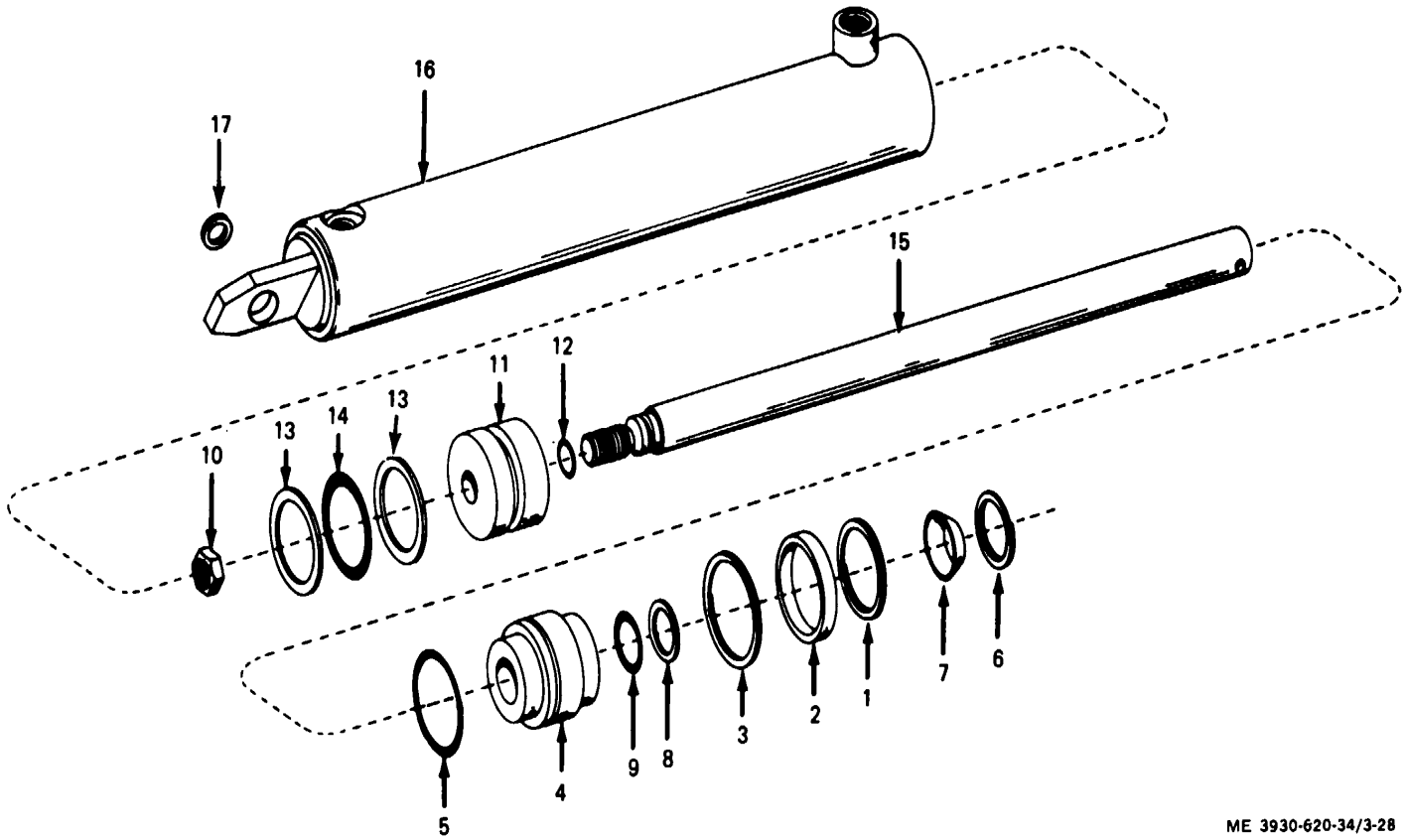

1. Retainer ring
2. Spacer
3. Anti extrusion ring
4. Head
5. Preformed packing
6. Lock ring
7. Wiper ring
8. Backup ring
9. Preformed packing
10. Nut
11. Piston
12. Preformed packing
13. Backup ring (2)
14. Preformed packing
15. Shaft
16. Tube assembly
17. Bearing

Figure 3-28. Side shift cylinder, exploded view.

(2) Compress lock ring (6) holding head (4) and remove from tube assembly.

(3) Remove remaining internal components by carefully pulling on shaft (15).

(4) Carefully slide head off end of shaft.

(5) Remove nut (10) securing piston (11) to shaft. Slide piston off end of shaft.

(6) Remove backup rings (13) and preformed packing (14) from piston, Remove preformed packing (12) from shaft.

(7) Remove backup ring (8) and preformed packing (5 and 9) from head.

(8) Check bearing (17) at end of tube assembly and replace if damaged.

c. Cleaning, Inspection and Repair.

(1) Clean all metallic parts with solvent.

(2) Inspect tube bore, rod head, and piston for cracks, scratches, scoring, and other possible dam age.

(3) Repair or replace any components that are worn or damaged.

d. Reassembly.

(1) Use new preformed packing (5, 9, 12, and 14, fig. 3-28).

(2) Prior to assembling, coat each component with clean hydraulic oil to facilitate installation and to provide initial lubrication.

(3) Position backup rings (13) and packing (14) on piston. Install piston on rod and secure with nut.

(4) Install wiper ring (7) in head with small diameter towards the end of shaft. Secure with lock ring (6).

(5) Install packing (9) and backup ring (8) in head. Position anti extrusion ring (3), and spacer (2) on head.

(6) Carefully slide piston and rod assembly into tube assembly (16).

(7) Position head assembly over rod and compress retainer ring (1). Slide head assembly (with retainer ring compressed) into tube until retainer ring snaps into groove in tube assembly.

3-22. Control Valve

a. General. The hydraulic system control valve (fig. 3-29) contains three plunger sections, an inlet section, and an outlet section. Each section may be replaced separately. Parts in each section may be replaced individually, except plunger section housings and their selectively fit plungers, which shall be replaced as units.

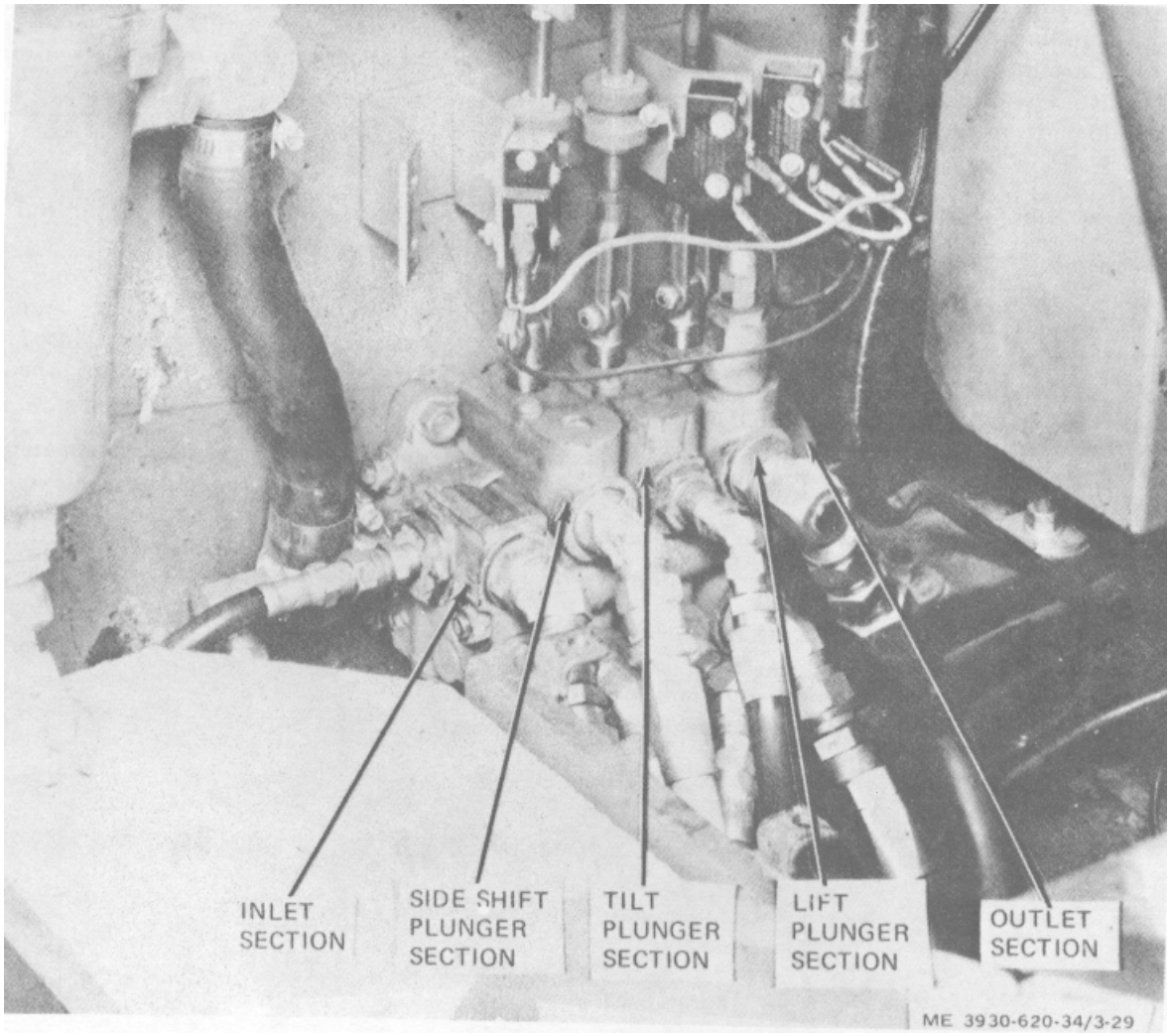

Figure 3-29. Control valve.

b. Removal. Remove control valve according to paragraph 2-9.

c. Disassembly. Disassemble control valve as follows: (fig. 3-30.)

***Caution*: Disassembly of hydraulic system components shall be performed in a clean working area, free of dirt and other foreign matter.**

Note. Position all parts on a flat working surface in order of disassembly, insuring that parts, which are common between sections, do not become mixed. Identify and tag all parts.

(1) Insure that working area is clean and free of dirt and other foreign matter.

(2) Position control valve on inlet end.

(3) Remove retaining nuts from tie rods (82 and 84).

(4) Remove outlet section (81) from tie rods.

(5) Remove spring (80), poppet (79), and preformed packing (78) from lift plunger section.

(6) If poppet cannot be removed easily, hold lift plunger section above working surface with poppet facing downward and tap lightly on plunger section until poppet slides out.

(7) Remove lift plunger section from tie rods.

(8) Remove seal plate (56) from plunger end of section.

(9) Remove plunger cap (51) and seal plate (56) at opposite end of housing and pull lift plunger from housing.

(10) Remove wiper (57) and preformed packing (58) from lift plunger end of section and identify from which end these were removed.

(11) Remove special screw (54), plunger spring (55), spring seats (53), and wiper (57) from lift plunger.

(12) Remove acorn nut (76), jamnut (75), and copper washers (77) from relief assembly.

(13) Turn relief valve assembly out of inlet housing. Flats are provided on cap to remove relief valve assembly.

(14) Remove adjusting screw (74), spring (73), poppet "E" (72), preformed packings (70, 68, and 64), and backup rings (63 and 69) from plug (71). Count and record the number of turns required to remove the adjusting screw.

(15) Remove poppet "K" (62) from cap (61).

(16) Remove poppet "D" (65), and preformed packing (70) from poppet "K".

(17) Remove spring (50), poppet (49), and preformed packing (48), from lift plunger section.

(18) Remove tilt plunger section from tie rods.

(19) Remove plugs and preformed packings from housing.

(20) Repeat steps (8) through (11) for disassembly of tilt plunger section.

(21) Repeat steps (9) through (11) for disassembly of tilt wiper section.

(22) Remove preformed packing (36) from left section.

(23) Repeat steps (8) through (11) for disassembly of side shift plunger section.

(24) Repeat steps (9) through (11) for disassembly of side shift wiper section.

(25) Remove plug (13) and preformed packing (14) from inlet housing.

(26) Remove acorn nut (7) jamnut (9), and copper washers (9) from relief valve assembly.

(27) Turn relief valve assembly out of inlet housing. Flats are provided on cap to remove relief valve assembly.

(28) Remove adjusting screw (10) spring (11), poppet "E" (12), preformed packings (14, 16, and 20) and backup rings (15 and 21) from plug (13). Count and record the number of turns required to remove the adjusting screw.

(29) Remove poppet "K" (22) from cap (23).

(30) Remove poppet "D" (19) and backup ring (21), preformed packing (20), spring (17) and piston (18) from poppet "K".

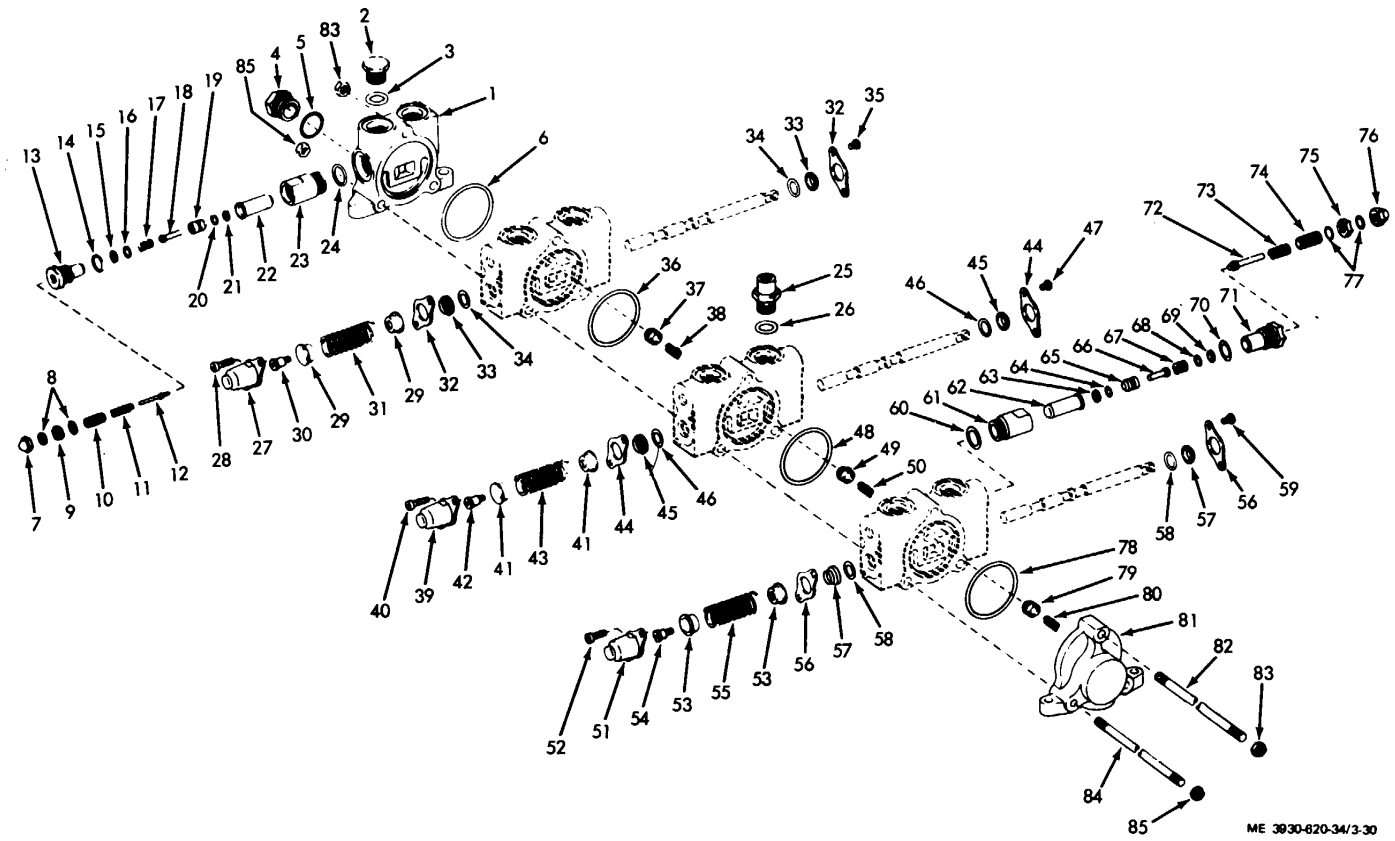

Figure 3-30. Control valve, exploded view.

KEY to fig. 3-30:

1. Inlet section assy
2. Plug
3. Preformed packing
4. Plug
5. Preformed packing
6. Preformed packing
7. Acorn nut
8. Washer
9. Jamnut
10. Adjusting screw
11. Spring
12. Poppet "E"
13. Plug
14. Preformed packing
15. Backup ring
16. Preformed packing
17. Spring
18. Piston
19. Poppet "D"
20. Preformed packing
21. Backup ring
22. Poppet "K"
23. Cap
24. Preformed packing
25. Plug
26. Preformed packing
27. Plunger cap
28. Special setscrew
29. Spring seat (2)
30. Screw
31. Plunger spring
32. Seal plate (2)
33. Wiper (2)
34. Preformed packing (2)
35. Screw
36. Preformed packing
37. Poppet
38. Spring
39. Plunger cap
40. Special setscrew
41. Spring seat (2)
43. Spring
44. Seal plate (2)
45. Wiper (2)
46. Preformed packing (2)
47. Screw
48. Preformed packing
49. Poppet
50. Spring
51. Plunger cap
52. Special setscrew
53. Spring seat (2)
54. Screw
55. Plunger spring
56. Seal plate (2)
57. Wiper (2)
58. Preformed packing (2)
59. Screw
60. Preformed packing
61. Cap
62. Poppet "K"
63. Backup ring
64. Preformed packing
65. Poppet "D"
66. Piston
67. Spring
68. Preformed packing
69. Backup ring
70. Preformed packing
71. Plug
72. Poppet "E"
73. Spring
74. Adjusting screw
75. Jamnut
76. Acorn nut
77. Washer
78. Preformed packing
79. Poppet
80. Spring
81. Outlet section
82. Tie rod
83. Nut (2)
84. Tie rod
85. Nut (2)

d. Cleaning and Inspection. Clean and inspect control valve as follows:

***Warning*: Use an approved cleaning solvent.**

(1) Clean each metal part in an approved solvent and dry thoroughly.

(2) Inspect housings for physical damage, such as cracks, etc.

(3) Carefully inspect plunger bores for scores, cracks, and other damage.

(4) If plunger bores are scored or damaged, replace valve section.

(5) each section's mating surfaces and insure that surfaces are free of burrs and pits.

(6) Inspect all control valve parts for damaged or worn parts.

(7) Apply a coating of clean hydraulic oil to all parts.

e. Reassembly. Reassemble control valve as follows: (fig. 3-30.)

Note. Serviceable seals contained in repair kit. should be installed in control valve prior to reassembly. Prior to reassembling control valve, insure that a coating of clean hydraulic oil has been applied to each part.

(1) Install plug (2) and preformed packing (3) in inlet section.

(2) Install preformed packing (20) and backup ring (21) on poppet "D" (191. The preformed packing is installed on top of backup ring.

(3) Place poppet "D" (19) in poppet "K" (22).

(4) Position piston (18) and spring (17) in poppet "D" and "K" assembly. Install piston first.

(5) Place poppet "E" (12) and spring (11) in plug (13). Secure poppet and spring in position using adjusting screw (10). Turn screw in the same number of turns required for removal.

(6) Install backup ring (15) and preformed

packings (14 and 16 on plug. Backup ring is positioned toward adjusting screw end of plug.

(7) Install preformed packing on plug and assemble plug and cap assembly to complete relief valve. Secure relief valve in inlet housing.

(8) Install plugs and preformed packings on tilt plunger section.

(9) Install wiper (45) and preformed packing (46) on spring end of tilt plunger.

(10) Position seal plate (44), spring seats (41), and plunger spring (43) on tilt plunger and secure using special screw (42).

(11) Slide plunger assembly into housing bore and coat plunger spring with a light coat of multipurpose grease.

(12) Position plunger cap (391 over spring end of plunger and secure to housing using screws (40).

(13) Install preformed packing (46), then wiper (45) on linkage end of tilt plunger.

(14) Secure seal plate (44) to housing using screws (47).

(15) Install preformed packing (481, poppet (491, and spring (50) on tilt plunger section housing.

(16) Repeat steps (8) through (14) to assemble lift plunger section.

(17) Repeat steps (8) through (14) to assemble side shift plunger section housing.

(18) Position inlet, side shift, lift, tilt, and outlet sections together. Insure that preformed packing, poppets, and springs remain in position.

Note. Before connecting sections, insure that two 5/16 inch and one 3/8 inch tie rods are properly positioned.

(18) Connect control valve sections using tie rods.

(19) Install nuts on each end of the rods.

(20) Torque 3/8 inch nuts 33 foot-pounds and 5/16 inch nuts 14 foot-pounds.

(21) Tape all openings on control valve to prevent dirt and other foreign matter from entering valve during installation.

f. Adjustment. Adjustment is performed after installation, according to paragraph 2-9.

3-23. Reservoir

a. Removal. Remove the reservoir according to paragraph 2-10.

b. Disassembly. (fig. 3-24.) To disassemble the reservoir, remove the level gage (25), filler screen (26), breather (24), elbow (28), and pipe plug (27).

c. Inspection and Repair. Inspect the reservoir for cracks or breaks which could cause leakage.

Weld broken or cracked areas. Inspect the threaded holes. If threads are damaged, repair them with suitable pipe or bolt taps. Reservoir should be flushed clean after welding or other repair.

d. Reassembly. Replace parts removed in subparagraph *b*.

3-24. Hydraulic Pump

a. Removal. Remove the hydraulic pump according to paragraph 2-14.

b. Disassembly.

***Warning*: Use an approved cleaning solvent.**

(1) Clean exterior of hydraulic pump using an approved solvent.

(2) Secure hydraulic pump in a vise.

(3) Scribe mark across back plate (17, fig. 3-31), body parts (22, 26 and 27), and front plate assembly (5) to assure proper reassembly. If the back plate and body are rotated 180 degrees, the pump will rotate in the opposite direction.

(4) Cover drive gear shaft splines with tape to protect splines and oil seal during disassembly.

(5) Remove screws from back plate (17) and port adaptor (1). Remove port adaptor and gasket (2) from body. Separate back plate from slip-fit gear body (22).

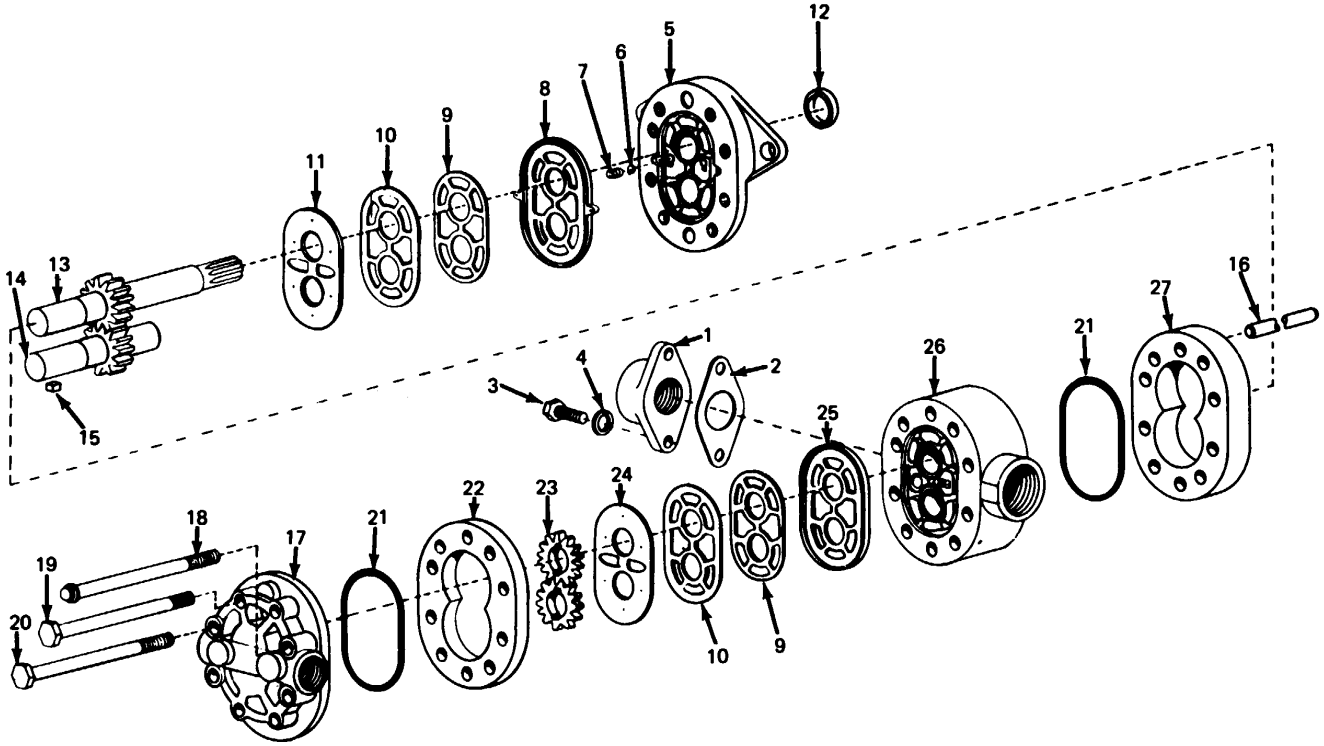

ME 3930-620-34/3-31

1. Port adaptor
2. Port gasket
3. Screw (2)
4. Lock washer (2)
5. Front plate assembly
6. Steel ball (2)
7. Spring (2)
8. Diaphragm seal
9. Protector gasket (2)
10. Backup gasket (2)
11. Diaphragm
12. Shaft seal
13. Drive gear assembly
14. Idler gear assembly
1. Machine key
1. Dowel pin (2)
1. Back plate
18. Screw (2)
19. Screw (4)
20. Screw (2)
21. Preformed packing (2)
22. Body
23. Slip fit gear (2)
24. Diaphragm
25. Diaphragm seal
26. Adaptor body assembly
27. Body

Figure 3-31. Hydraulic pump, exploded view.

(6) Remove pump from vise and turn pump shaft-end up. Shake pump to remove slip-fit gears (23) from body.

(7) Remove key from drive gear shaft.

(8) With rubber mallet, tap splined end of drive gear shaft to separate front plate from body.
Remove drive gear and idler shaft from front plate.

(9) Lift diaphragm (11, backup gasket (10), protector gasket 19) and diaphragm seal (8) from front plate and adaptor body assembly. Remove steel balls and springs from front plate.

(10) With a drift pin, remove dowel pins i16} securing body and body adaptor.

(11) Separate body and adaptor.

c. Cleaning and Inspection.

(1) Clean all parts in an approved solvent and thoroughly dry with compressed air. Remove any nicks or burrs from parts with emery cloth.

(2) Inspect drive gear shaft for broken keyway or damaged splines. The drive gear shaft and idler gear shaft must be inspected in bearing and seal areas for rough surfaces and excessive wear. If shafts measure less than 0.6850 inch in bearing area, the gear assembly must be replaced. (One gear assembly may be replaced separately. Shafts and gears are available as assemblies only.)

(3) Inspect the drive, idler, and slip fit gear faces for scoring and excessive wear. If the gear width of the drive gear assembly and idler gear assembly is less than 0.767 inch, the gear assemblies require replacement. If the slip fit gear width is less than 0.371 inch, the gears must be replaced.

(4) Measure the inside diameter of the bearings in the front plate or adaptor plate. The front plate or body adaptor require replacement if the inside diameter of the bearings exceeds 0.691 inch.

(5) The gear pockets in the gear bodies must be checked for excessive scoring or wear. The bodies should be replaced if the inside diameter of the gear pocket exceeds 1.719 inches.

d. Reassembly.

(1) Before reassembling pump, clean each part in an approved solvent. Thoroughly dry each part with compressed air and coat each part with clean hydraulic oil. All seals, gaskets, and diaphragms should be replaced with new parts. Be careful to keep parts clean during reassembly.

(2) Tuck diaphragm seal (8, fig. 3-31) into grooves in front plate assembly (5) with open part of "V" section down.

(3) Press gasket protector (9) and backup gasket (101 into diaphragm seal. Drop steel balls into seats in front plate assembly and position springs over balls.

(4) Place diaphragm (11) on top of backup gasket, bronze face up.

(5) Repeat steps (2), (3) and (4), above, for installing diaphragm seal, protector gasket, backup gasket, and diaphragm to body adaptor (26). The steel balls and springs are not used in the body adaptor. The intake hole in the diaphragm must be aligned over the intake hole in the face of the body adaptor.

(6) The entire diaphragm must fit inside the raised rim of the diaphragm seal (25)

(7) Slide gear assemblies (13 and 14) through front plate bearings.

(8) Apply a thin coat of heavy grease to both milled faces of body. Slip body over gears onto front plate. Half-moon port cavities in body must face away from the front plate. The small drilled hole in one of the cavities must be on the pressure side of the pump.

(9) Slide body adaptor over gear shaft and tap into place with rubber hammer. Install key on drive shaft and slide slip fit gears (23) onto shafts.

(10) Coat both milled surfaces of slip fit gear body (22) with a thin coat of heavy grease. Slide body over gears onto body adaptor. Half-moon cavities in body must face away from body adaptor. Small drilled hole in one of the cavities must be on pressure side of pump.

(11) Position back plate (17) onto slip fit gear body. Secure pump sections together with screws (18, 19, and 20). Tighten screws to 25 foot-pounds.

Note. The two 4 1/2 inch, 12-point screws are installed on each side of the pressure port. The two 4 1/2 inch, hex head screws are installed directly opposite the 12-point screws. The 4 1/4 inch screws are installed in the remaining positions in the back plate.

(12) Position port gasket (2) and port adaptor (1) to pump housing with lock washers (4) and screws (3). Tighten screws to 10-12 foot-pounds.

(13) Tape drive gear shaft splines and work shaft seal over shaft into position in back plate. Oil the seal liberally when installing. Take care not to damage oil seal rubber lip.

(14) Rotate pump shaft by hand or with pliers. Pump will have a small amount of drag, but should turn freely after short period of use.

e. Hydraulic Pump Specifications.

Pump section:	*Primary*	*Secondary*
GPM at 2015 RPM:	2.3 (1500 psi)	9.5 1500 psi)
Displacement:	0.33 cu in / rev	1.25 cu in / rev
Rotation (viewed from drive gearshaft end):	Clockwise	

3-25. Hydraulic Pump Motor

a. General. The hydraulic pump motor is a sealed, ball bearing type motor. The pump motor is compound wound for uniform speed, maximum pump life, and smooth hydraulic control. The pump motor is located to the right of the drive

motor and is supported on each end by mounting brackets which are secured to the lift truck frame. The pump motor is activated through microswitches whenever the key switch is in the ON position and the lift or tilt levers are operated. Hydraulic pump motor specifications are as follows:

b. Specifications.

Power ..... 10.7 hp
Speed ..... 1950 rpm
Voltage ..... 36 volts
Amperage ..... 260 amperes

c. Brush and Brush Holder Service. Dual pump motor brushes of high current-carrying capacity are precision fitted into broached brush boxes to insure proper brush alignment. A metal clip located on top of each brush provides a seat for the spring and also forms a stop device that prevents commutator scoring should brushes become excessively worn. Brushes require replacement when their length is 9/16 inch or less. Pump motor brushes may be changed without difficulty whenever pump motor has been removed from lift truck, however, brushes may be changed if pump motor is installed on lift truck by performing the following. (fig. 3-32.)

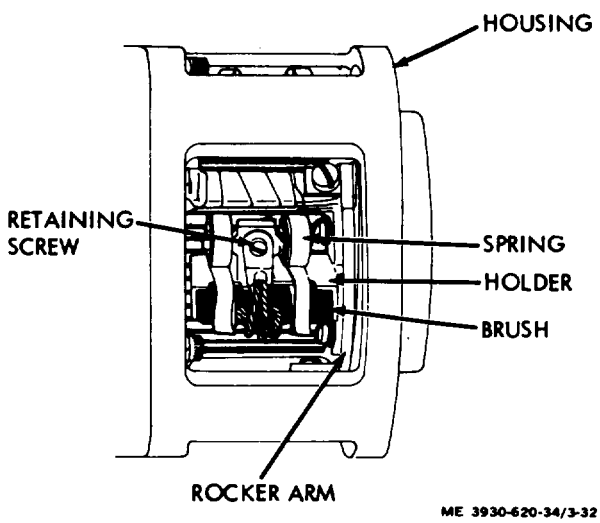

Figure 3-32. Hydraulic pump motor brush location.

(1) Removal of Brushes.

(a) Disconnect battery and discharge capacitors (para 2-5).

(b) Raise operator's seat by pulling forward to gain access to battery compartment.

(c) Open battery compartment cover by lifting up and pulling back on the handle.

(d) battery side panels by lifting up and removing from lift truck.

(e) a chain hoist, remove battery from battery compartment.

(f) Remove screws securing battery retainer and remove retainer.

(g) Remove screws securing battery acid tray and remove tray.

(h) Unsnap band assembly from around pump motor housing and remove band.

(i) Remove brush shunt retaining screws.

(j) Lift brush retaining springs and remove brushes from brush holders.

(k) Install wheel chocks forward and aft of front wheels to prevent lift truck from moving.

(l) Using a suitable lifting device, raise rear end of lift truck above the ground sufficiently to gain access to lower pump motor brushes. Install blocking under truck.

(m) Remove brush shunt retaining screws.

(n) brush retaining springs and remove brushes from brush holders.

(2) *Installation of Brushes.*

Note. Before installing new brushes into pump motor, insure that brushes are contoured to match radius and brush angle of brushes removed during removal procedure. Check brush spring tension. It should be 25 ounces : ± 20%.

Note. Final seating of brushes can be accomplished using a fine mesh seating stone while commutator is rotating.

(*a*) Using a sanding drum with the same diameter as pump motor commutator, hold new brush against sanding drum until brush contact face resembles old brush contact face.

(*b*) Repeat step (a) for each new pump motor brush to be installed.

(*c*) new pump motor brushes in the reverse order of removal procedure.

d. Removal. For repair, beyond brush holder service, remove the hydraulic pump motor according to paragraph 2-15.

e. Disassembly. Disassemble pump motor as follows:

(1) Remove thermal relay from stator housing ITM 10-3930-620-12).

(2) Remove screws securing mounting brackets (4 and 20, fig. 3-33) and remove brackets.

(3) Remove front and rear bands 1 and 2) from pump motor.

(4) Remove brush shunt retaining screws.

(5) Lift brush retaining springs (15) and remove brushes (16) from brush holders (13).

(6) Remove remaining screws securing front housing (3) to stator (391 and remove housing.

***Caution*: Use extreme care when removing armature to prevent damaging core, commutator, or pole faces. Insure that armature is pulled straight up and out of stator.**

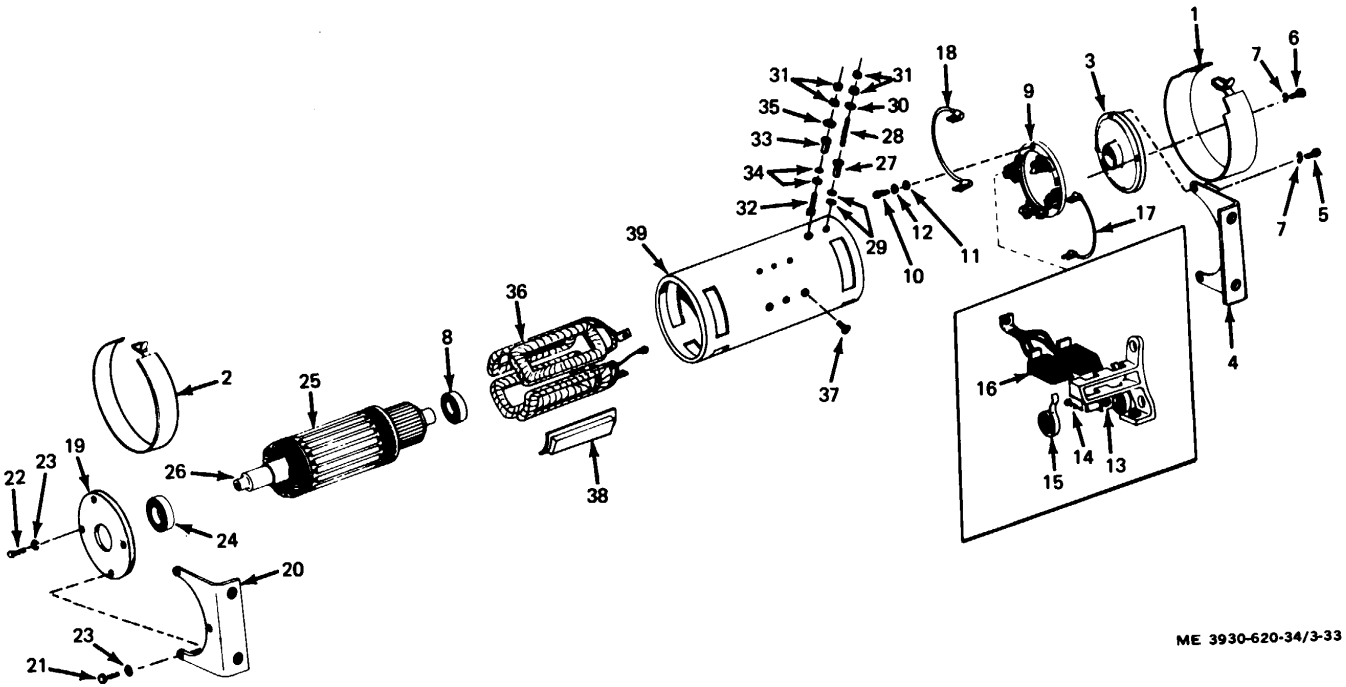

1. Band
2. Band
3. Front housing
4. Bracket assembly
5. Screw
6. Screw
7. Lock washer
8. Bearing
9. Brush plate
10. Screw
11. Lock washer
12. Lock washer
13. Brush holder
14. Screw
15. Brush spring
16. Brush
17. Brush connector
18. Brush connector
19. Rear housing
20. Bracket assembly
21. Screw
22. Screw
23. Lock washer
24. Bearing
25. Armature assembly
26. Armature shaft
27. Insulator
28. Stud terminal
29. Washer
30. Lock washer
31. Nut
32. Screw
33. Insulator
34. Washer
35. Lock washer
36. Field winding
37. Screw
38. Shim
39. Stator

Figure 3-33. Hydraulic pump motor, exploded view.

(7) Carefully remove armature assembly, complete with bearings, from stator. (fig. 3-34.)

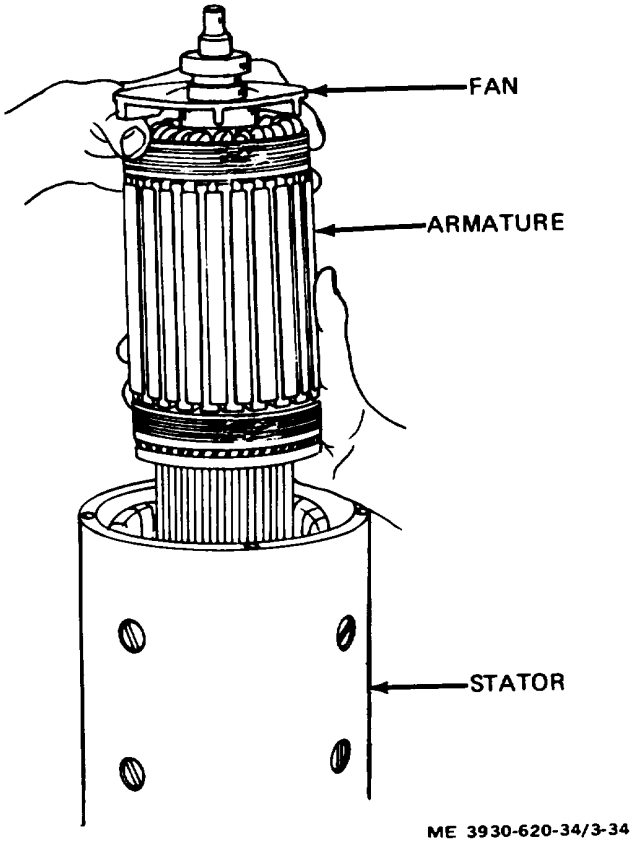

Figure 3-34. Armature removal.

***Caution*: Use extreme care when using a gear puller as center of shaft may be damaged. Insure that a shaft protector is used in conjunction with gear puller.**

(8) If bearings are worn or damaged, remove bearings from armature shaft using a suitable gear puller. (fig. 3-35.)

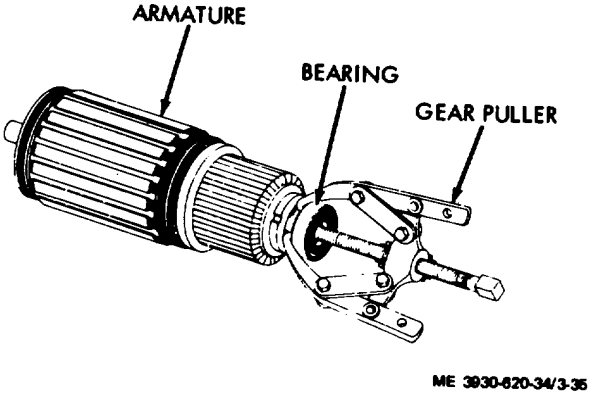

Figure 3-35. Bearing removal.

(9) If necessary, remove key and snap ring securing fan to armature shaft.

(10) Remove end cover and rocker arm assembly. (fig. 3-36.) Disassemble rocker arm assembly as far as necessary to remove worn or dam aged parts.

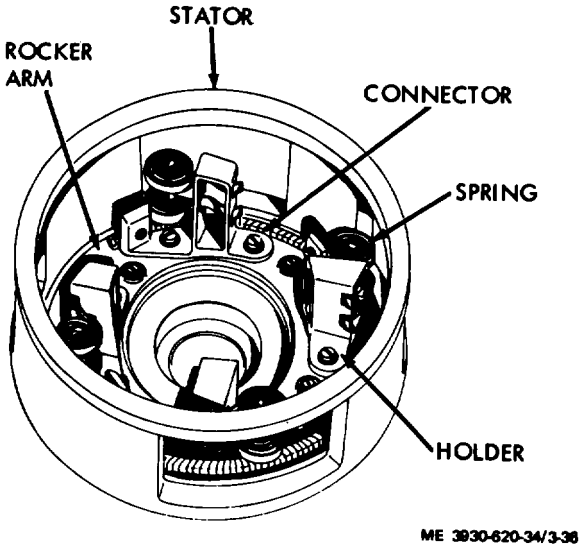

Figure 3-36. End cover and rocker arm assembly.

***Caution*: Use care when removing field winding 136, fig. 3-33) to prevent damage to insulation.**

Note. Do not remove field winding unless coils are to be replaced.

(11) Remove pole retaining screws and remove field coils. Note and record the quantity of shims found behind each pole shoe. (fig. 3-37.)

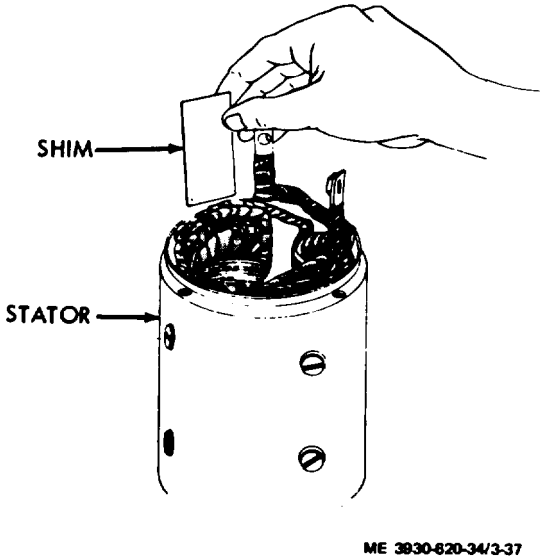

Figure 3-37. Shim removal.

(12) Remove pole shoe from each field coil, then remove coil assembly.

Note. Record sequence of disassembly to insure proper reassembly.

(13) Disassemble and remove terminal studs if damaged.

f. Replacement of Armature Shaft.

Note. If armature or armature shaft is damaged. perform the following:

(1) Disassembly.

***Caution*: Insure that top end of pipe makes complete contact with the core from above the shaft, but under the core rivets.**

(*a)* Place drive end of armature shaft in a pipe approximately 2 inches inside diameter and approximately 15 inches long. (fig. 3-38.)

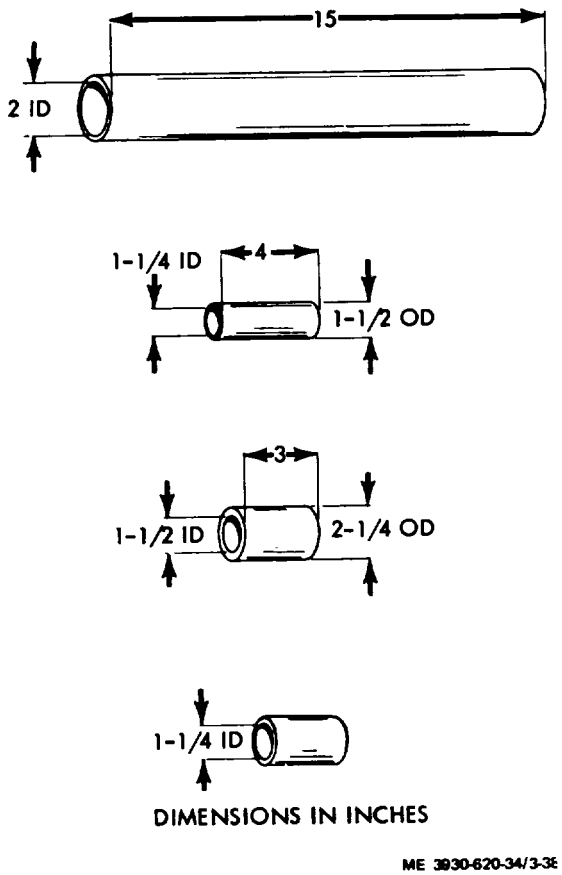

Figure 3-38. Armature shaft pipes.

(*b*) a second pipe of 11/4 inches inside diameter, 1 1/2 inches (maximum) outside diameter, and approximately 4 inches long against the bearing shoulder on the commutator end of the shaft.

(*c*) Apply vertical pressure on the pipe (commutator end) and press the shaft from the arm attire.

(2) Reassembly.

(a) Insert the shaft in the armature as far as possible, using hand pressure only.

(b) With assembly in vertical position, place a 3 inch long, 1 1/2 inch inside diameter, 2 ¼ inch outside diameter pipe against the commutator sleeve.

(c) Using a 1 1/4 inch inside diameter pipe against the bearing shoulder (drive end), apply vertical pressure until the shaft bottoms completely against the core support.

g. Cleaning and Inspection. Clean and inspect pump motor as follows:

***Warning*: Use an approved cleaning solvent in a well ventilated area when cleaning parts.**

***Caution*: Armature and armature field windings must be cleaned using a clean cloth dampened in solvent. Do not soak, dip, or saturate armature or field windings.**

(1) Using a clean cloth dampened in solvent, clean armature and field windings and allow to dry thoroughly.

(2) Clean all other parts in solvent and allow to dry thoroughly.

(3) Inspect all parts for wear, broken windings, and damage.

h. Test.

***Caution*: Whenever connections have to be soldered, a resin flux must be used. Acid flux must never be used on electrical connections.**

(1) Check armature for shorts by placing it on a "growler" and with a steel strip or a hack saw blade held on armature core, rotate armature. If blade vibrates, armature is shorted in area of the core below the vibrating blade. Copper or brush dust in slots between commutator bars sometimes cause shorts which can be eliminated by cleaning out slots. Shorts at crossovers of coils at core end can often be eliminated by bending wire slightly and re-insulating exposed bare wire. If short cannot be eliminated, armature must be replaced.

(2) To test armature for grounds, place one probe of test lamp on armature core or shaft and place other probe on each commutator bar in turn. If lamp lights, armature is grounded and must be replaced.

(3) To test for grounded fields, place one probe of test lamp on field frame and other probe on field terminal. If lamp lights, field coils are grounded and must be replaced, if ground cannot be located and required.

i. Commutator Repair. Carefully inspect the commutator. If burned, rough, or out-of-round, it must be cut down and the mica undercut. Minimum diameter for undercutting is 3 inches.

(1) Place armature in a lathe and turn down commutator until true. Make certain cut is not made on commutator riser bars as solder will be removed, weakening coil connections at this section. Remain approximately 3 / 16 inch from riser bars when cutting.

(2) Undercut mica between bars to a depth not exceeding 0.030inch. Undercut must be full width of mica and flat at bottom. After undercutting, clean out slots to remove any dirt and copper dust.

(3) commutator lightly with No. 00 sandpaper to remove an)y burrs left from undercutting.

(4) Check armature on a growler for short circuits. Refer to subparagraph h.

j. Reassembly. Reassemble pump motor in the reverse order of disassembly.

Note. Prior to reassembly, lubricate bearings in accordance with LO 10-3930-620-12.

Section III. MAST GROUP

3-26. General

The mast group of the vehicle consists of a mast assembly, carriage and backrest assembly, and forks. The hydraulic lift mast consists of an inner mast, an intermediate mast, and an outer mast. The intermediate and inner masts ride on adjustable roller bearings, enabling them to telescope up and down smoothly and with a minimum of drag. The carriage assembly is a welded structure having horizontal upper and lower fork support bars and a pair of vertical carriage support bars.

3-27. Mast Assembly

a. Removal. Mast repair can usually be accomplished without removal from the truck. If necessary, remove the mast assembly according to paragraph 2-19.

b. Disassembly. (fig. 3-39.)

(1) Remove the chains (8 and 20), bolts (10 and 22), hydraulic line and support (25). Remove the elbows, fitting and flow regulator from the primary and secondary lift cylinders.

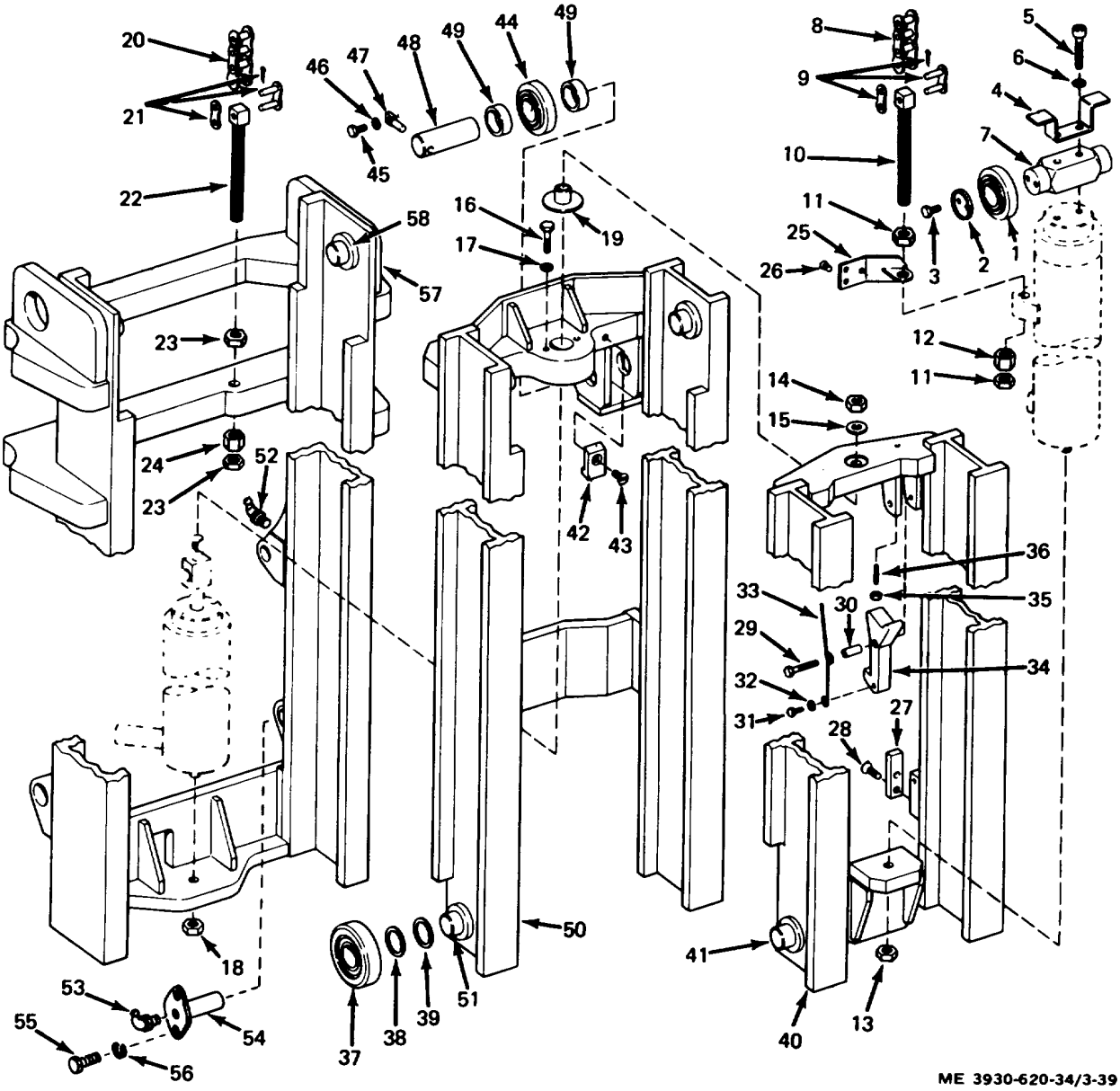

1. Bearing
2. Retainer
3. Screw
4. Guard
5.. Screw
6. Washer
7. Crosshead
8. Chain
9. Link
10. Anchor bolt
11. Nut
12. Nut
13. Nut
14. Nut
15. Washer
16. Screw
17. Washer
18. Nut
19. Spacer
20. Chain
21. Link
22. Anchor bolt
23. Nut
24. Nut
25. Support
26. Screw
27. Stop
28. Screw
29. Screw
30. Spacer
31. Screw
32. Washer
33. Spring
34. Interlock
35. Nut
36. Setscrew
37. Bearing
38. Shim
39. Shim
40. Inner mast
41. Shaft
42. Striker
43. Screw
44. Bearing
45. Screw
46. Washer
47. Pin
48. Shaft
49. Spacer
50. Intermediate mast
51. Shaft
52. Lub fitting
53. Lub fitting
54. Pin
55. Screw
56. Washer
57. Outer mast
58. Shaft

Figure 3-39. Mast assembly, exploded view.

(2) Remove the primary lift cylinder (para 2-17) and remove the chain guard (4), bearing (1) and crosshead (7).

(3) Remove the spacer (19) and the secondary lift cylinder (para 2-18).

(4) Remove the spring (33), interlock (34) and stop (27). Slide the inner mast (40) out the bottom of the intermediate mast (50).

(5) Remove the striker (42) and slide the intermediate mast (50) out the top of the outer mast (57).

(6) Remove the shaft (48) bearing (44), bearing (37), and lubrication fitting (52).

c. Cleaning, Inspection and Repair.

(1) Clean structural components with a soap solution and rinse with clean water. Soak chains for four hours in a solution of 50 percent engine oil with 50 percent solvent. Wipe dry. Clean remaining parts with solvent.

(2) Inspect the mast structures for cracks, fatigue lines, distorted or misaligned channels, broken welds, and other damage. Repair cracks and minor breaks in the mast by welding. Avoid heat distortion. Replace the mast if damage is excessive.

(3) Inspect bushings and rollers for wear, scoring, pitting, discoloration, and other damage. Replace if damaged.

(4) Inspect chains for worn or damaged links. Replace as required.

(5) Inspect all other components for damage, distortion, and wear. Repair or replace parts as necessary.

d. Mast Bearing Adjustment.

(1) Using an adjustable spanning tool, locate the narrowest point on the rear inside of the outer mast channel. (fig. 3-40.) Lock the tool in this position. Set an adjustable outside spanning tool to match the inside spanning tool and lock in position.

(2) Install bearings on shafts at the bottom of the intermediate mast assembly. Using the outside spanning tool, span bearings at the maximum camber point. Add shims as required to obtain a maximum clearance of 0.015 inch between the hearings and the outside spanning tool. Divide shims as equally as possible between bearings.

Note. If an odd number of shims is required, place the extra shim on the same side of all mast sections and carriage so that the mast will be balanced.

(3) Using the outside spanning tool, find the widest point in the outside width on the web on the intermediate mast assembly. Install bearings on the shafts at the top inside of the outer mast. Use the inside spanning tool to span bearings at the maximum camber point. Check the clearance between the spanning tools. Add shims as necessary to obtain a maximum clearance of 0.015 inch.

(4) Repeat (2) and (3) to adjust the upper bearings on the inside of the intermediate mast and the lower bearings on the inner mast.

(5) Raise and lower the mast and carriage several times to check for free movement throughout the entire range of travel. Readjust bearings if necessary.

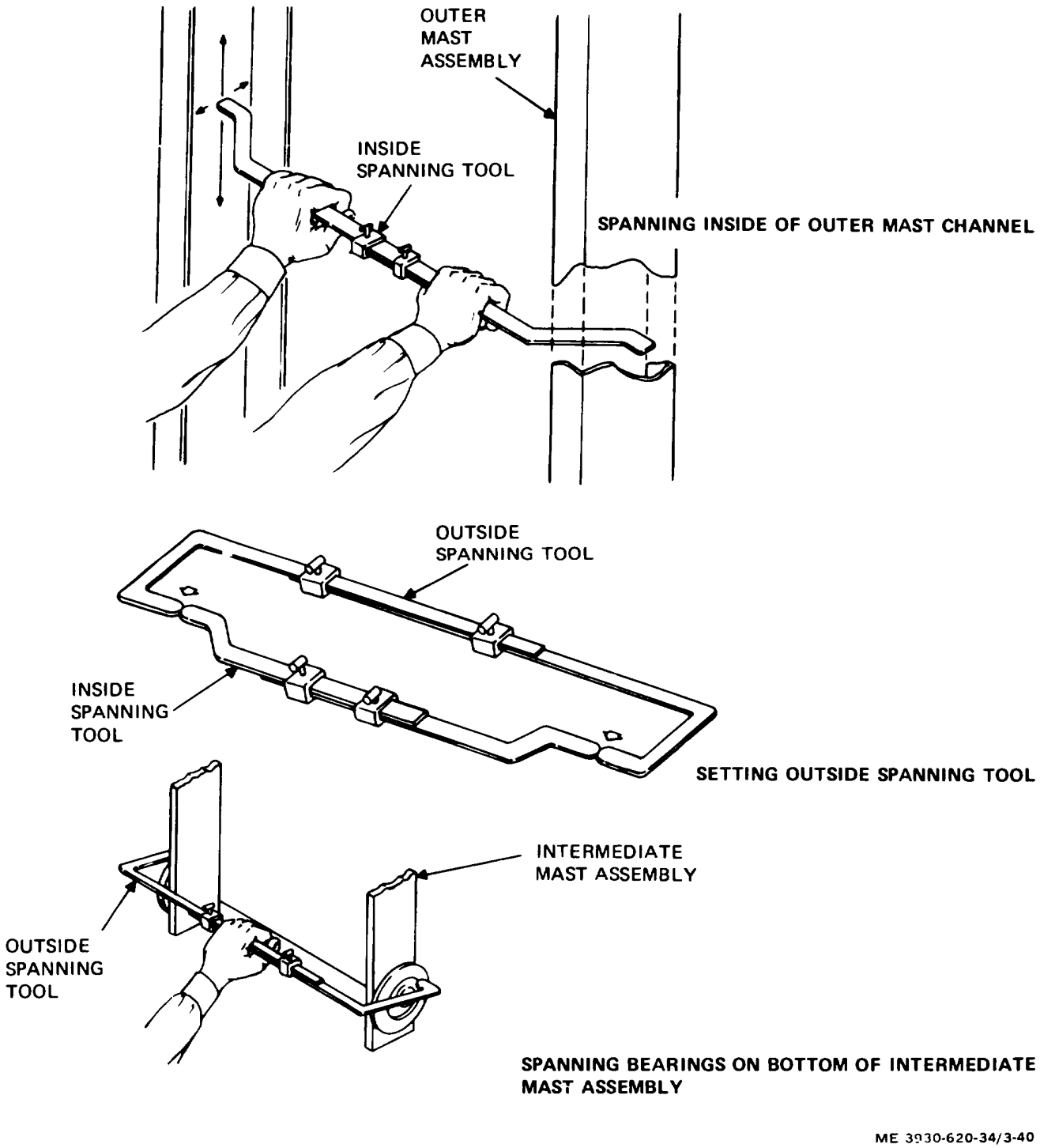

Figure 3-40. Mast bearing adjustment.

e. Reassembly. Reassemble the mast in the reverse order of disassembly.

f. Chain Adjustment. For mast and carriage chain adjustment, refer to paragraph 2-19.

3-28. Carriage and Backrest Assembly

a. Removal. Remove the carriage and backrest assembly according to paragraph 2-16.

b. General. Disassembly. (fig. 3-41.)

(1) Remove the backrest from the carriage.

(2) Remove the bearings and shims from the carriage.

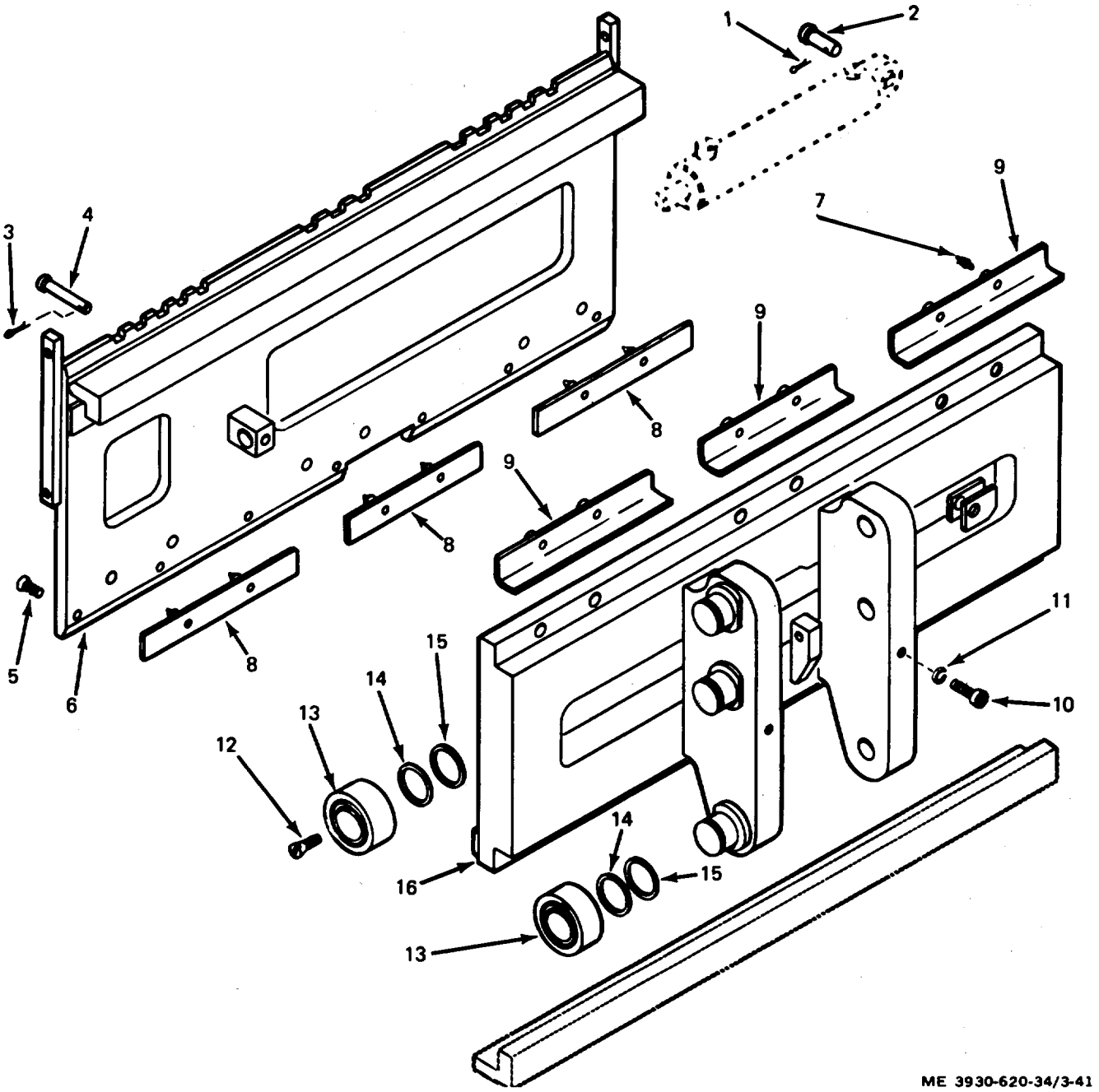

1. Pin
2. Pin
3. Pin
4. Pin
5. Screw (7)
6. Plate
7. Lubrication fitting (12)
8. Wear strip (3)
9. Wear angle (3)
10. Screw (2)
11. Washer (2)
12. Screw (2)
13. Bearing (6)
14. Shim (6)
15. Shim (6)
16. Frame

Figure 3-41. Side shift carriage, exploded view.

c. General Cleaning, Inspection and Repair.

(1) Clean the carriage and backrest components with soap and water and rinse with clean water. Clean bearings as follows:

***Warning*: Use an approved cleaning solvent.Do not use compressed air to spin-dry bearings.**

(*a*) Clean bearings in an approved solvent.

(*b*) Dry bearings thoroughly using a clean lint-free cloth.

(*c)* Pack bearings by hand or by using a mechanical packer.

(*d)* that grease is introduced between balls and rollers.

(*e*) If bearings are not to be installed immediately, wrap bearings in clean oilproof paper to keep them free of contaminents.

(2) Inspect the carriage and backrest for cracked or broken welds, dents, bends, distortion and other damage. Repair by welding if possible, or replace as required.

(3) Inspect the rollers for distortion and damage. They must turn freely on the carriage posts. Replace rollers as necessary.

d. Side Shift Carriage Wear Strips. Bronze wear strips are used in the side shift carriage to aid in reducing sliding friction whenever the carriage is moved to the right or left. Nine grease fittings located on the forward side of the side shift carriage are used to lubricate the wear strips. Bronze wear strips will be replaced whenever wear strips are less than 1/16 inch in thickness. Proceed as follows:

(1) Remove seven flathead nylon screws securing lower hanger bar to side shift carriage.

(2) Remove lower hanger bar end fork carriage.

(3) Using a suitable prying tool, loosen and remove wear strips from fork carriage.

(4) Clean wear strip mating surfaces and check for nicks, scratches, and uneven wear.

(5) Repair damaged areas, if required.

(6) Install new bronze wear strips and grease fittings on fork carriage by snapping into holes provided.

(7) Apply a coating of grease to all wear strips and mating surfaces.

(8) Position fork carriage and lower hanger bar on side shift carriage and install seven flathead nylon capscrews.

(9) Torque screws to 57±3 foot-pounds.

e. Reassembly. Reassemble the carriage and backrest in the reverse order of disassembly. Using a grease gun, lubricate the wear strips.

f. Bearing Adjustment. For bearing adjustment, refer to paragraph 2-16.

3-29. Forks

a. Removal. Remove the forks (TM 10-3930620-12).

b. Inspection and Repair. (fig. 3-42.)

(1) Inspect the latch (5), clevis pin (3), spring (7), and lock pin (6) for signs of wear or damage. If any of these parts are worn or damaged they must be replaced as a unit.

(2) If the fork (I) is damaged, replace as authorized.

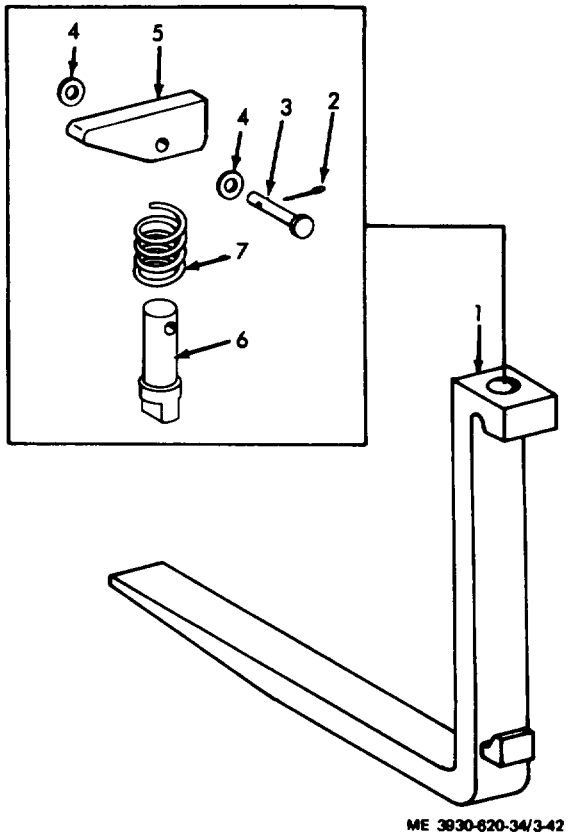

Figure 3-42. Fork assembly, exploded view

3-30. General

a. A hydraulically operated, self-adjusting service brake system is used in the lift truck to insure positive, safe braking. (fig. 3-43.) The system consists of a mechanically activated hydraulic master cylinder with heavy duty brake lines transmitting hydraulic pressure to brake wheel AND SEAT BRAKES cylinders located behind a dust shield in each of the drive wheels. The wheel cylinders are double end type. This type of cylinder has activating links extending from each end of the cylinder. These links transmit the movement from the wheel cylinders to the brake shoes.

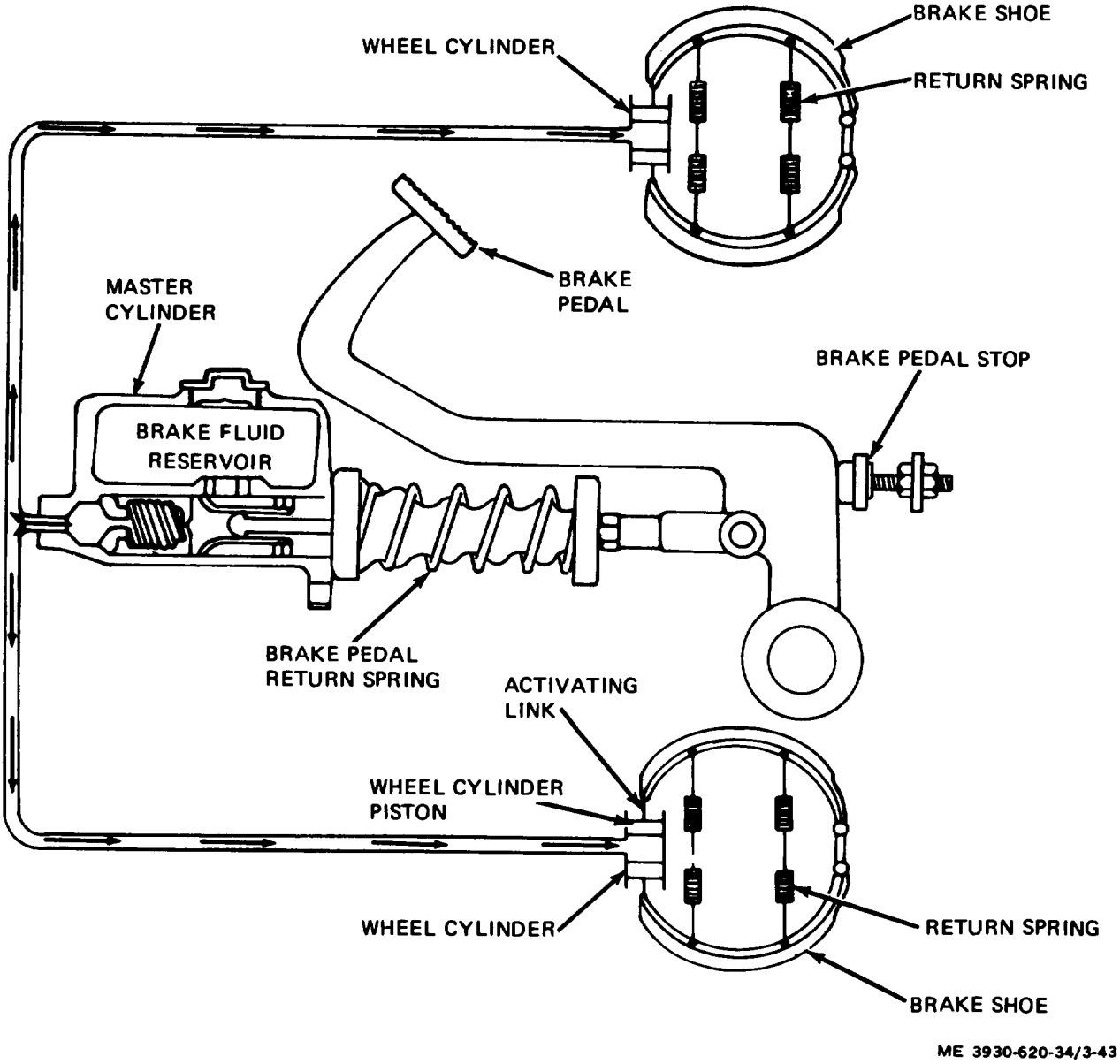

Figure 3-43. Hydraulic service brake system.

b. The service brakes are self-adjusting through the use of a friction operated link assembly in each wheel. The friction in the link assembly is great enough to prevent shoe return springs from collapsing the link, but not enough to prevent pedal pressure from expanding it. Link assemblies are attached to the brake shoes with roll pins. The pin mounting holes in the brake shoes are 1/32 inch oversize to provide proper working clearance between shoe lining and brake drum.

c. The seat brake is a fully enclosed, two shoe. mechanical brake. Equal pressure is applied to both shoes when the brake is actuated (seat unoccupied). The directional control is electronically returned to a "Neutral" condition when the seat brake is actuated.

3-31. Hydraulic Wheel Cylinder

a. Removal. Remove the wheel cylinder (Tm 10-3930-620-12).

b. Disassembly. Cleaning. and Inspection. (fig. 3-44.)

(1)Remove rubber boots (1) from openings at end of wheel cylinder.

(2) Remove pistons (2), piston caps (3), and spring (4) from wheel cylinder.

(3) Low pressure air may be used to remove internal parts of wheel cylinder by applying air pressure at hydraulic brake fluid inlet, if required.

Caution: Do not use mineral base solvents such as gasoline, kerosene, carbon tetrachloride, acetone, point thinners, etc., to clean rubber parts.

(4) Clean wheel cylinder internal parts using a lint-free cloth dampened in clean denatured alcohol or hydraulic brake fluid.

(5) Inspect parts for corrosion.

(6) Inspect piston surfaces for scratching or pitting.

(7) Inspect rubber parts for deterioration, swelling, softening, tackiness, and lack of springaction.

(8) Replace all parts which appear to be worn or damaged.

(9) Inspect cylinder bore for deep blemishes, scratching, or pitting.

(10) If scratching, pitting, or deep blemishes are found in cylinder bore, remove cylinder and recondition in accordance with subparagraph c.

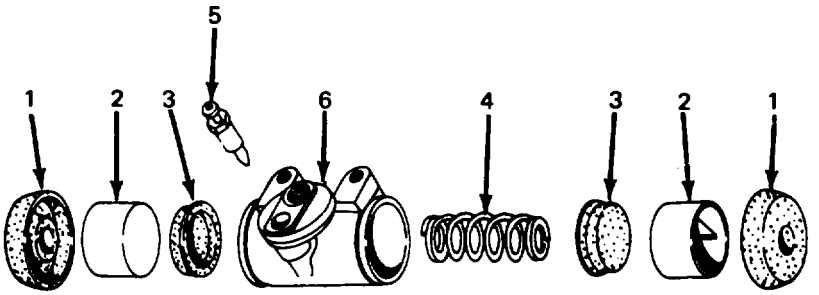

ME 3930-620-34/3-44

1. Boot (2)
2. Piston (2)
3. Piston (2)
4. Spring
5. Bleeder screw
6. Cylinder

Figure 3-44. Wheel cylinder, exploded view.

c. Repair.

(1) Insure that wheel cylinder has been cleaned in accordance with subparagraph b.

(2) Apply a coating of clean hydraulic brake fluid to walls of cylinder bore.

Caution: Do not distort or crack cylinder body when securing cylinder in vise.

(3) Secure wheel cylinder in vise.

Note. Before honing cylinder bore, become familiar with honing equipment manufacturer's operating and servicing instructions.

(4) Using honing equipment, remove scratching, pitting, etc. from cylinder bore in single passes.

(5) After each pass is completed, visually check cylinder bore for the absence of scratching, pitting, etc.

(6) If scratching, pitting, etc., is deep or excessive and wheel cylinder bore would have to be honed oversize (greater than 1.5070 inches), replace cylinder.

(7) Clean cylinder body using clean, soapy water.

(8) Rinse cylinder body using clean, warm water.

Warning: Wear suitable eye protection when using compressed air.

(9) Dry cylinder body using compressed air.

d. Reassembly. (fig. 3-44.)

Note. If cylinder bore has been honed, insure that new parts contained in repair kit are installed.

(1) Apply a coating of clean hydraulic brake fluid to walls of cylinder bore and all internal wheel cylinder parts.

Note. Do not push pistons through full length of cylinder bore.

(2) Install spring (4), piston caps (3), and pistons (2) into wheel cylinder.

(3) Install rubber boots I1 on openings at end of wheel cylinder.

(4) Insure that rubber boots are properly positioned in cylinder grooves.

3-32. Master Brake Cylinder

a. General. The hydraulic master brake cylinder is located below the toe and floor plates on the inside frame of the lift truck. The master brake cylinder and hydraulic brake fluid reservoir are combined into one body and are joined by intake and bypass ports located within the cylinder wall. Internal parts are removed and installed at the push rod end of the cylinder. An electrical stop light switch is located on the opposite end of the cylinder. The cylinder piston is actuated through linkage when pressure is applied to the brake pedal.

b. Removal. Remove the master brake cylinder TM 10-*3930-620-12).*

c. Disassembly. (fig. 3-45.)

Caution: Do not distort or crack cylinder body when securing cylinder in vise.

(1) Secure master brake cylinder in vise.

(2) Remove boot (21 and piston rod (1).

Note. Piston assembly parts will spring outward when lockwire is removed if parts are are not held in place.

(3) Remove lockwire (3) from piston assembly (5), while holding parts in place.

(4) Carefully remove piston plate (4), piston assembly (5), primary cup (6), spring assembly (7), and valve assembly (8).

(5) Remove stop light switch, fluid passage bolt, outlet fitting (11), and gaskets 19 and 10) from outlet end of cylinder.

(6) Remove filler cap (12) and nonmetallic washer (13) from body.

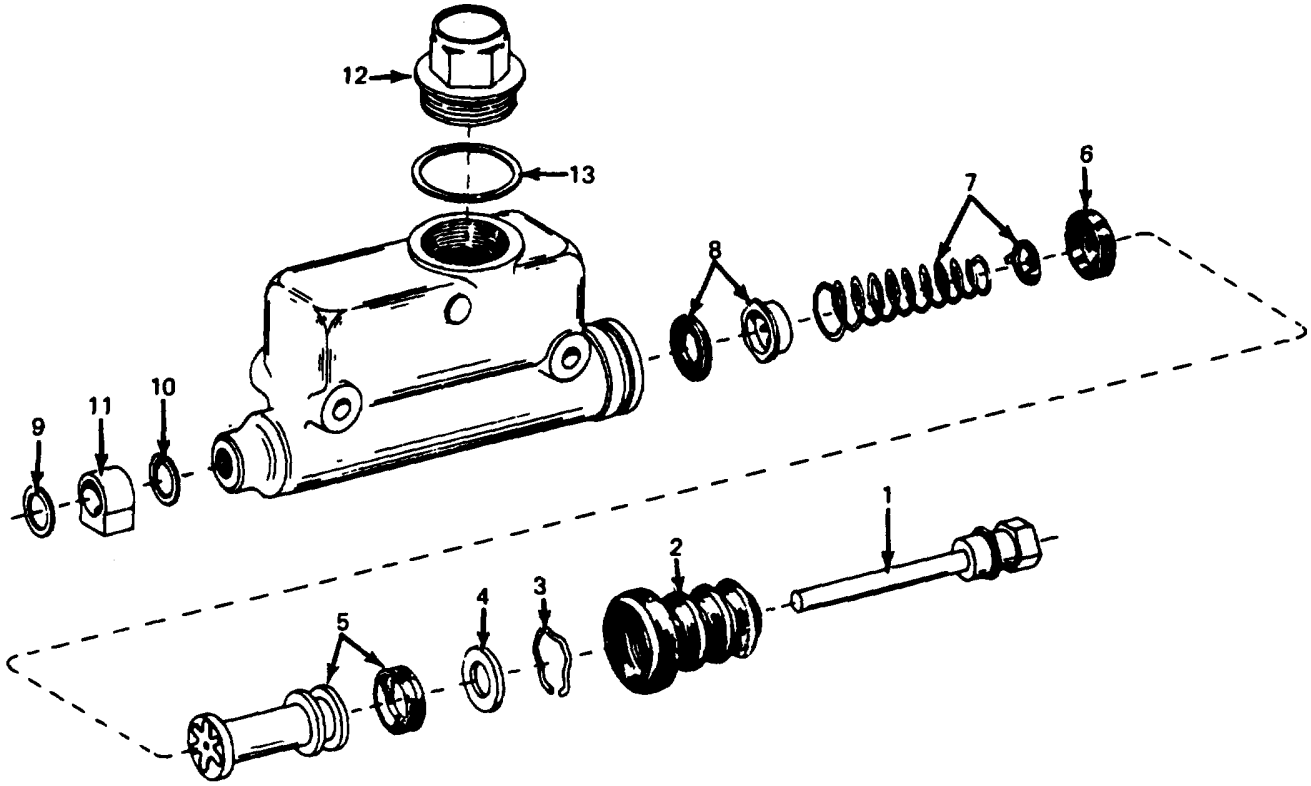

ME 3930-620-34/3-45

1. Piston rod
2. Boot
3. Lockwire
4. Piston plate
5. Piston assembly
6. Primary cup
7. Spring assembly
8. Valve assembly
9. Outlet gasket
10. Outlet gasket
11. Outlet fitting
12. Filler cap
13. Nonmetallic washer

Figure 3-45. Master brake cylinder, exploded view.

d. Cleaning and Inspection.

Caution: Do not use mineral base cleaning solvents such as gasoline, kerosene, carbon tetrachloride, acetone, paint thinners, etc., to clean rubber parts.

(1) Clean all master brake cylinder internal parts using a lint-free cloth dampened in clean denatured alcohol or hydraulic brake fluid.

(2) Remove dirt, metal filings, sludge, and other foreign matter from cylinder and tank and external cylinder parts.

(3) Inspect cylinder bore for deep blemishes.

(4) If deep blemishes are found, cylinder shall be honed and all new parts contained in repair kit will be installed (sub-para e).

(5) Inspect cylinder for pressure marks and discoloration.

Caution: Do not use emery cloth or sandpaper to polish affected area.

(6) If pressure marks and discoloration is found, polish affected area using crocus cloth.

(7) Insure that intake port and bypass port passages are free of burrs, dirt, and other foreign matter.

(8) Using a piece of soft, iron wire, probe bypass port passage to insure that passage is open.

(9) Inspect all parts for corrosion.

(10) Inspect piston bearing surfaces for scratches or pitting.

(11) Inspect rubber parts for deterioration, swelling, softening, tackiness, and lack of spring-action.

(12) Replace all parts which appear to be worn or damaged.

e. Repair.

(1) Insure that master brake cylinder has been cleaned in accordance with subparagraph d.

(2) Apply a coating of clean hydraulic brake fluid to walls of cylinder bore.

Caution: Do not distort or crack cylinder body when securing cylinder in vise.

(3) Secure hydraulic master brake cylinder in vise.

Note. Before honing cylinder bore, become familiar with honing equipment manufacture's operating and servicing instructions.

(4) Using honing equipment, remove scratching, pitting, etc., from cylinder bore in single passes.

(5) After each pass is completed, visually check cylinder bore for the absence of scratching, pitting, etc.

(6) If scratching, pitting, etc., is deep or excessive and master brake cylinder bore would have to be honed oversize (greater than 1.0070 inches), replace cylinder.

(7) Clean cylinder body using clean, soapy water.

(8) Rinse cylinder body using clean, warm water.

Warning: Wear suitable eye protection when using compressed air.

(9) Dry cylinder body using compressed air.

(10) Insure that intake port and bypass port passages are free of burrs, dirt, and other foreign matter.

(11) Submerge cylinder body in clean hydraulic brake fluid.

f. Reassembly. (fig. 3-45.)

Note. If cylinder bore has been honed, insure that new parts contained in repair kit are installed.

(1) Insure that all master brake cylinder internal parts and cylinder bore have been coated with clean hydraulic brake fluid.

Caution: Do not distort or crack cylinder body when securing cylinder in vise.

(2) Secure hydraulic master brake cylinder in vise.

(3) Insure that large end of spring is positioned as shown in figure 3-45 before installing valve assembly (8) and spring assembly (7).

(4) Install valve assembly and spring assembly in bore of cylinder body.

(5) Place primary cup (6) in cylinder bore and install piston assembly 15).

(6) While compressing spring and piston assembly, install piston plate 14) and lockwire (3).

(7) Insure that lockwire is seated in groove in end of cylinder.

(8) Install gaskets (9 and 10), outlet fitting (11), fluid passage bolt, and stop light switch in outlet end of cylinder.

(9) Position boot (2) on push rod end of cylinder.

(10) Insert piston rod (11 through opening in boot and insure that end of piston rod is seated in piston assembly.

(11) Install nonmetallic washer (13) and filler cap (12) but do not tighten.

(12) Remove cylinder from vise.

3-33. Seat Brake (fig. 3-46.)

a. General.

(1) The seat brake is an enclosed, two-shoe, mechanically operated brake, mounted on the drive motor armature shaft. The seat brake is actuated through spring pressure and mechanical linkage which is attached to the seat brake actuating cam. When spring pressure is applied to the actuating cam. pressure is applied to the actuating arms, which move the brake shoe linings in contact with the brake drum. As the spring pressure is removed front the actuating cam, the brake shoes are returned to the neutral position by the brake shoe return springs.

(2) If the seat brake and brake linkage are properly adjusted, the seat brake will be applied when the operator's seat is raised. The spring pressure which applies the brake is removed when a weight (e.g. the operator) is applied to the seat.

(3) The same spring pressure that applies the seat brake also raises the operator's seat (when unoccupied) through mechanical linkage. As the seat is raised, a tension block located along side of the seat hinge actuates the seat switch. The seat switch opens and interrupts power to the directional and power steering control circuits and all other systems. If the seat switch is properly adjusted, the lift truck remains stationary when the operator's seat is raised (unoccupied). The systems become operational when sufficient weight is applied to the operator's seat.

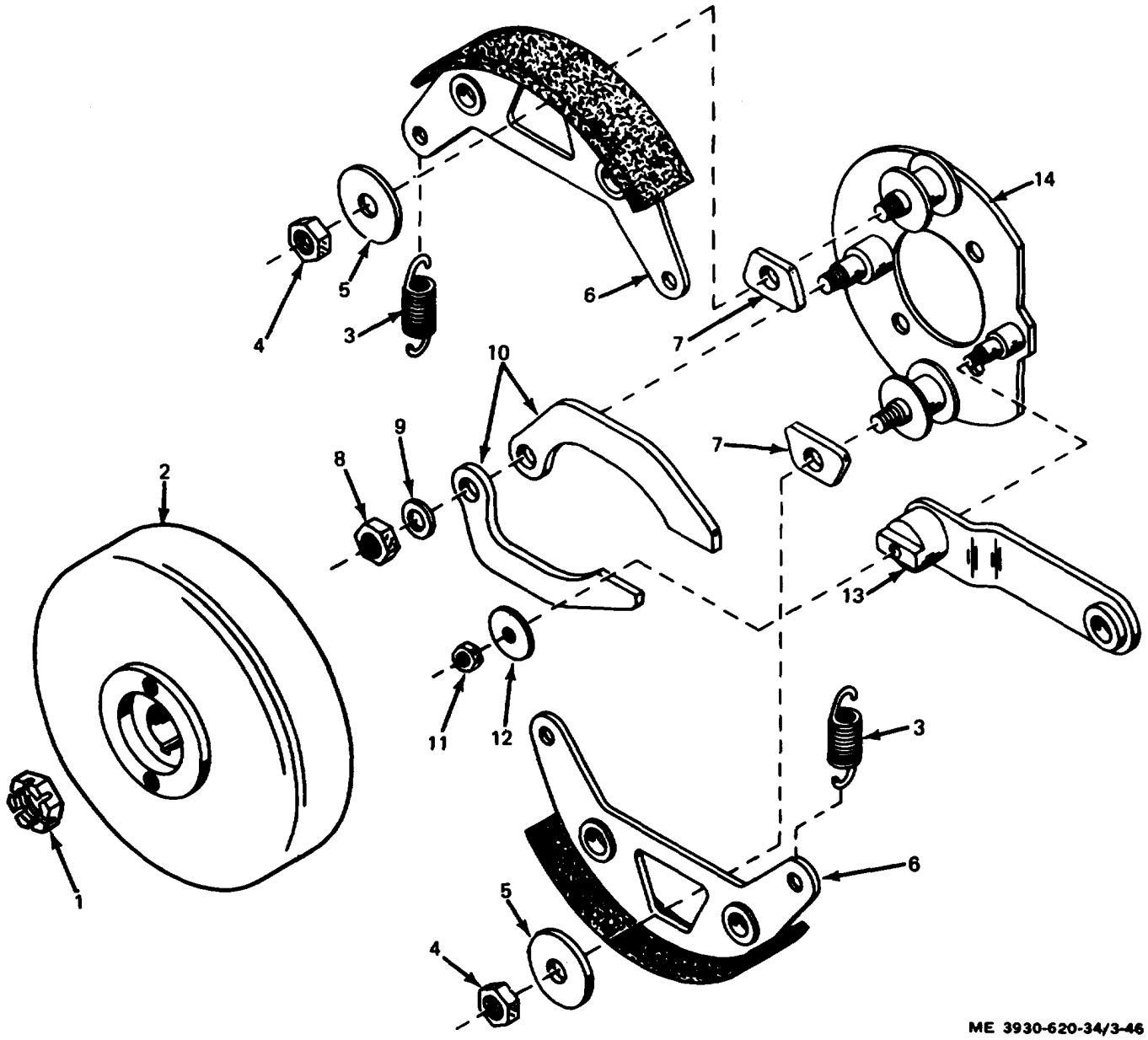

1. Slotted nut
2. Drum
3. Spring (2)
4. Nut (2)
5. Flat washer (2)
6. Shoe (2)
7. Drive block (2)
8. Nut
9. Flat washer
10. Actuating arm (2)
11. Nut
12. Flat washer
13. Actuating cam
14. Backing plate

Figure 3-46. Seat brake, exploded view.

b. Disassernbly.

(1) Disconnect battery and discharge capacitors (para 2-5).

(2) Install wheel chocks forward and aft of front wheels to prevent lift truck from moving.

(3) Remove toe plate and floor plate (TM 10-3930-620-12).

(4) Raise operator's seat and disconnect upper yoke from seat assembly.

(5) Remove power steering pump and motor (para 2-12 and 2-13).

(6) Remove nut (1, fig. 3-46) securing brake drum (2) to drive motor armature shaft.

(7) Remove brake drum from assembly.

(8) Disconnect and remove brake shoe return springs (3).

(9) Remove nuts (4) and flat washers (5).

(10) Slide brake shoes (6) from drive blocks (7).

(11) Remove nuts (8 and 11) and washers (9 and 12) and remove actuating arms (10) and actuating cam (13).

(12) Remove screws securing backing plate (14) to drive motor housing.

c. Inspection.

(1) Inspect backing plate for distortion and loose or sheared rivets.

(2) Inspect actuating pawls for wear.

(3) Inspect brake shoe lining for excessive wear and grease saturation.

(4) Inspect brake shoes for worn actuating pawl holes.

(5) Inspect brake shoe actuating arm lever contact areas or wear pads for excessive wear.

(6) Check brake drum for cracking, scoring, excessive wear, and other damage.

(7) Repair or replace all worn or damaged parts.

d. Reassembly.

(1) Reassemble seat brake in the reverse order
of disassembly.

(2) Discard brake shoe return springs (3, fig. 3-46) and install new springs during assembly.

Caution: Do not apply an excessive amount of grease as brake shoe linings may become saturated.

(3) Carefully apply a small amount of chassis grease to wear pads, actuating arm lever contact areas, and brake shoe metal wear areas.

(4) Adjust seat brake linkage (TM 10-3930-620-12).

3-34. Brake Drums

a. General. On out-of-round drums, gauge the diameter or the radius at points 45 degrees apart around the inside circumference of the drum. Drum should be resurfaced if measurement differences are greater than 0.010 inches in diameter or 0.005 inches in radius.

b. Removal. Remove brake drum (TM 10-3930-620-12).

c. Inspection. If worn lining face is tapered toward one side, or worn more on the sides than at the center, drum may be bell mouthed or barrel shaped. Check drum surfaces as indicated by wear pattern. Examine for scoring and heat checking. If not scored over 0.010 inches, lining will wear in and seat after some use. Heat checked or scored drum should be replaced or resurfaced, depending upon extent of damage.

d. Polishing. If drum does not require resurfacing, polish with fine emery cloth to remove discolorations and old lining residue adhering to surface.

Caution: Never use a drum machined to a diameter greater than 0.030 inches over original size. (TM 10-3930-620-12 for brake drum specification.) Thin drums are subject to excessive heat expansion and flexing causing fade and spongy pedal. They also could break under strain of severe use.

e. Resurfacing. If drum requires resurfacing, proceed as follows: First, resurface drums. Then, finish grind or hone drums to remove cutting tool marks, otherwise linings will wear rapidly and brake shoes will "run-out" when brakes are applied and will release with a clicking noise.

SECTION V. STEERING

3-35. General

a. The lift truck is equipped with a hydraulically operated power steering system. (fig. 3-47.) Power steering system components consist of a steering wheel and column, a hydraulically operated, steering gear located at the base of the steering column, a motor-driven hydraulic pump, a hydraulic filter, a power - steering cylinder, the hydraulic reservoir, and associated flexible rubber hydraulic lines.

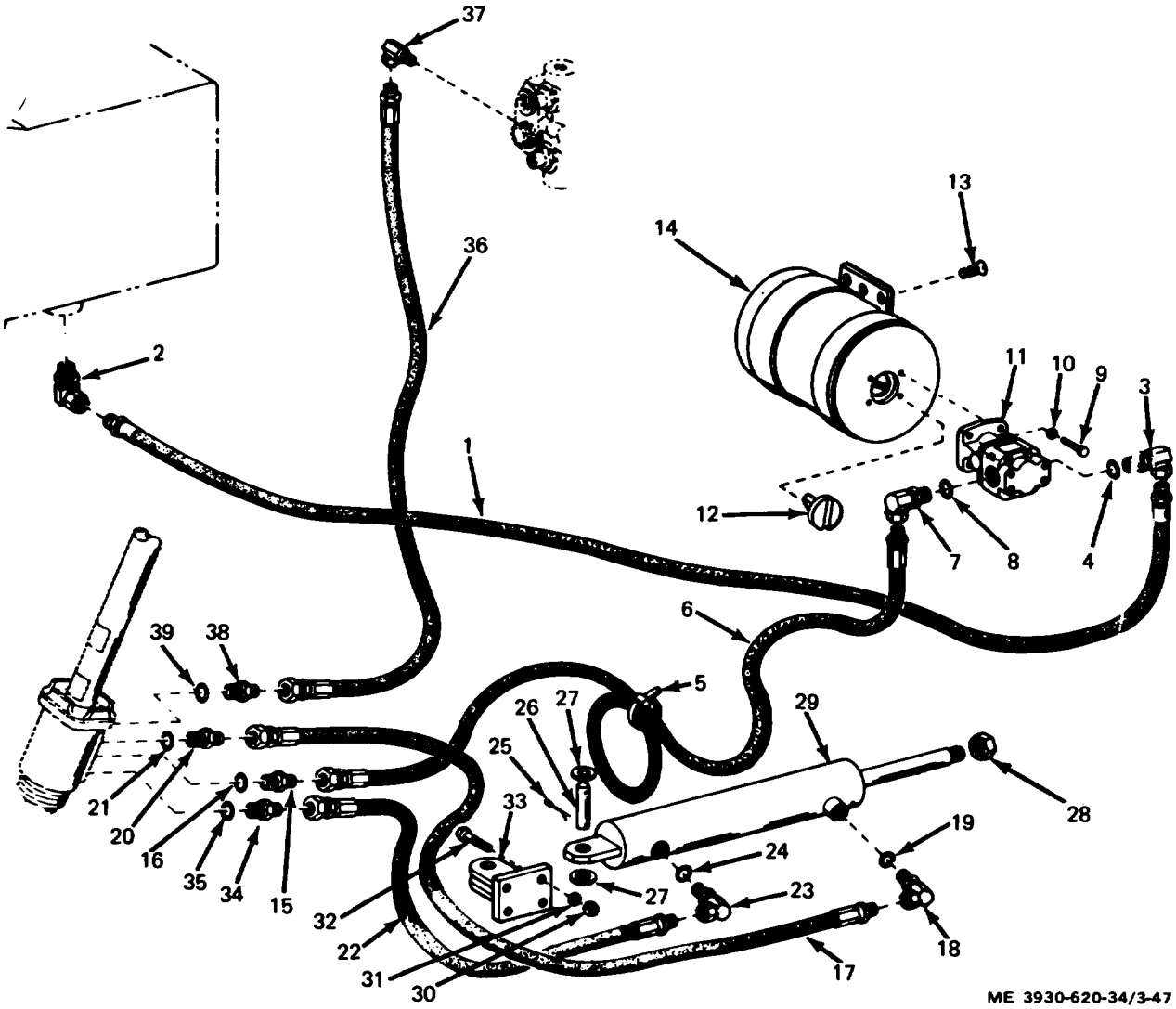

1. Hose assembly
2. Elbow
3. Elbow
4. Preformed packing
5. Loop clamp
6. Hose assembly
7. Elbow
8. Preformed packing
9. Screw
10. Lock washer (4)
11. Power steering pump
12. Shaft coupling
13. Screw
14. Power steering pump motor
15. Adapter
16. Preformed
17. Hose assembly
18. Elbow
19. Preformed
20. Adapter
21. Preformed packing
22. Hose assembly
23. Elbow
24. Preformed packing
25. Cotter pin (2)
26. Pin
27. Washer
28. Nut
29. Power steering cylinder
30. Nut (4)
31. Lock washer
32. Screw
33. Anchor assembly
34. Adapter
35. Preformed packing
36. Hose assembly
37. Elbow
38. Adapter
39. Preformed packing

Figure 3-47. Power steering components and connections.

b. When the steering wheel is rotated to the right, hydraulic fluid under pressure is directed from the steering gear to the forward end of the power steering cylinder. The power steering cylinder piston rod is connected to the drag link. When hydraulic pressure is supplied to the forward end of the power steering cylinder, the cylinder piston rod extends, actuating the drag link and tie rods which transfer movement to the steer wheels located at the rear of the lift truck. The steer wheels move the lift truck in the direction in which the steering wheel is rotated by swinging the rear end of the lift truck away from the direction of rotation. When the steering wheel is rotated to the left, hydraulic fluid under pressure is directed from the steering gear to the aft end of the power steering cylinder. The cylinder piston rod retracts, actuating the drag link and tie rods which move the steer wheels and lift truck into a left turn.

3-36. Steering Wheel, Column, and Gear

a. Removal. Remove the steering wheel, column, and gear according to paragraph 2-11.

b. Disassembly.

Note. Disassembly should proceed only as far as necessary for repair or replacement.

(1) Secure power steering gear in a suitable vise.

(2) Remove terminal from horn button electrical lead.

(3) Remove horn button and rubber cover by pushing down and turning counterclockwise to disconnect it from the attaching wedges located on base plate. (TM 10-3930-620-12.)

(4) Remove horn button contact cup, spring, and contact washer.

(5) Pull out horn cable and insulating ferrule.

(6) Remove three round head screws from horn button base plate.

(7) Remove base plate and contact insulator (19, figure 3-48).

(8) Remove nut (1) and lock washer (2) securing steering wheel (3) to steering column shaft.

(9) Using a wheel puller, remove steering wheel.

(10) Remove retaining ring (20) and first snap ring 121).

Caution: Do not use tools to free shaft.

(11) Push shaft (23) free of bearing (22) using thumb pressure.

(12) Remove shaft.

(13) Remove bearing and second snap ring.

Note. Mark the two screw holes so that parts will be reassembled properly.

(14) Secure unit in rise with meter end facing upward. (fig. 3-49.)

(15) Remove the seven screws.

(16) Remove the three-section cap, gear, and plate (end plate assembly) as a unit and store in immediate working area. (fig. 3-50.)

(17) Remove control assembly from vise.

(18) Check control spool and sleeve parts for freedom of rotation with column shaft.

(19) Place a clean wooden block across the vise throat to support spool parts.

(20) Clamp unit across port face with control end facing upward.

(21) Remove the four screws.

(22) While holding spool assembly against the wooden block, remove the end cap by lifting up. (fig. 3-51.)

(23) Inspect mating surfaces for leakage, path wear, and seal condition.

(24) Remove cap locator bushing by lifting up. (fig. 3-52.1

(25) Place port face of housing securely on a flat working surface.

Caution: Use extreme care when removing these parts because they are very closely fitted. They should be rotated slightly as they are withdrawn.

(26) Remove spool and sleeve assembly from the 14-hole end of the housing.

Note. Do not pry against edge of hole in housing bore.

(27) Using a small bent tool or wire, remove check valve seal plug from housing by pushing up. (fig. 3-53.)

(28) Secure housing in vise with control end facing upward.

(29) Unscrew check valve seat using a 3/ 16 inch hex wrench. (fig. 3-54.)

(30) Turn the housing over and tap lightly using palm of hand.

(31) With check valve hole facing lowest corner, remove check valve seat, ball, and spring.

(32) While holding spool assembly, use a straight pin or tool to push the centering pin and loosen from spool-sleeve assembly. (fig. 3-55.)

(33) Remove centering pin and store in immediate working area.

(34) Push inside lower edge of spool so that spool moves toward the splined end.

(35) Carefully pull spool from sleeve. (fig. 3-56 and 3-57.)

(36) Push centering spring set from spring slot in spool. (fig. 3-58.)

(37) Completely disassemble meter gear set.

c. Cleaning and Inspection. Clean and inspect power steering gear components as follows:

Warning: Use an approved cleaning solvent.

Note. New seals will be installed during reassembly procedure.

(1) Clean all parts in an approved solvent and allow to dry by placing on clean paper toweling.

(2) Inspect all parts for excessive wear or dam age.

(3) Inspect all moving parts for scratches or scoring.

(4) Remove scoring with 600-grit abrasive paper.

(5) Prepare all surfaces of meter section as follows:

(a) Place a sheet of 600-grit abrasive paper (abrasive side up) on plate glass or similar material.

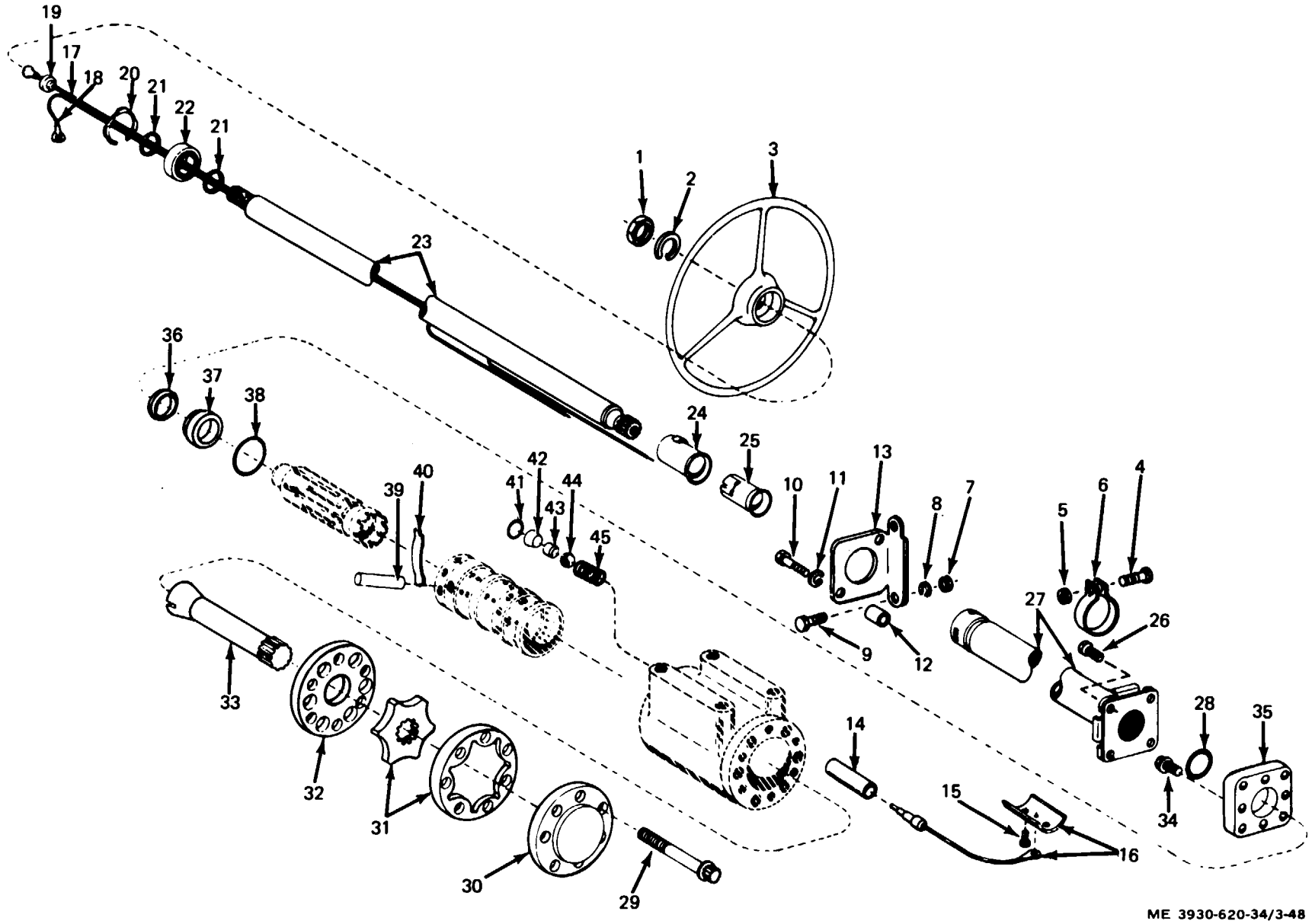

Figure 3-48. Steering column and gear, exploded view.

Key to fig. 3-48:

1. Nut
3. Steering wheel
4. Screw
5. Nut
6. Clamp
7.Nut (2)
8. Lock washer (2)
9. Screw (2)
10. Screw (2)
11. Lock washer (2)
12. Spacer (2)
13. Support assembly
14. Connector
15. Screw (4)
16. Horn contact brush assembly (2)
17. Lead
18. Lead
19. Horn button contact insulator
20. Retaining ring
21. Retaining ring (2)
22. Ball bearing
23. Steering shaft
24. Horn brush contact ring insulator
25. Contact ring insulator (2)
26. Screw (2)
27. Tube
28. Oil seal
29. Screw (7)
30. End cap
31. Meter gear set
32. Meter gear plate
33. Meter gear drive shaft
34. Screw (4)
35. Mounting plate (2)
36. Quad ring seal
37. Spool bushing
38. Preformed packing
39. Sleeve centering pin
40. Centering pin
41. Preformed packing
42. Check valve seal plug
43. Check valve ball seat
44. Check valve steel ball
45. Check valve spring

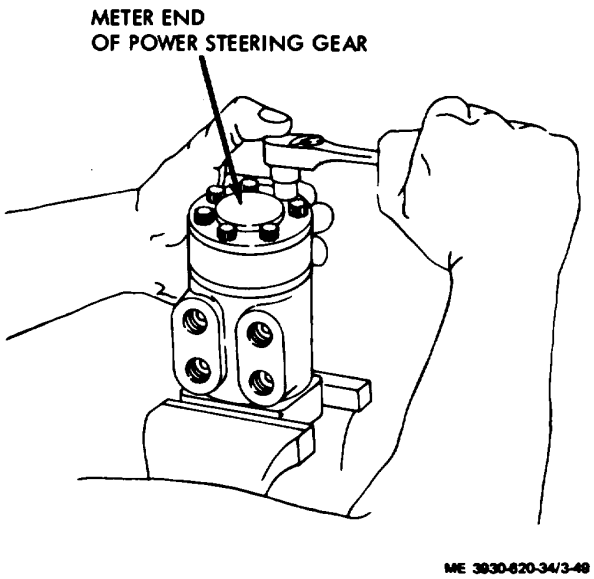

Figure 3-49. End plate capscrew removal.

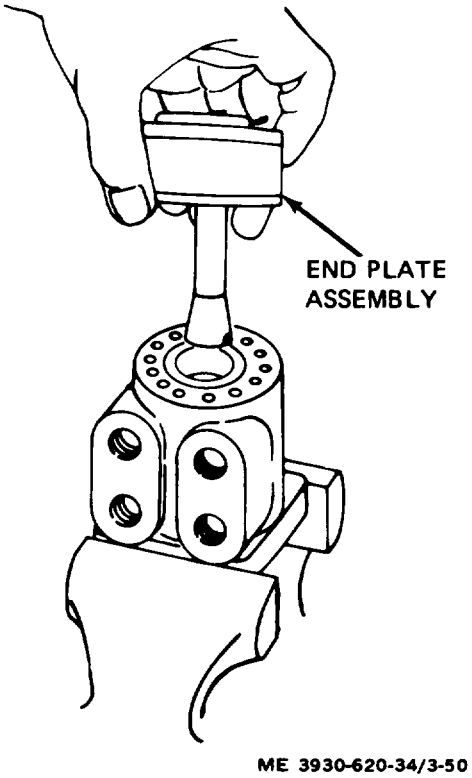

Figure 3-50. End plate assembly removal.

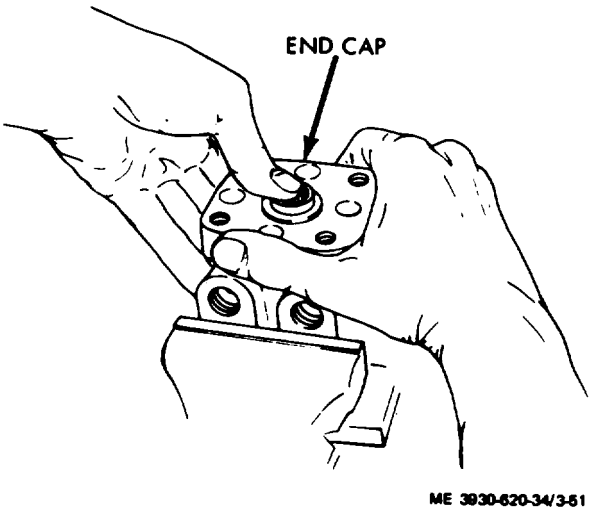

Figure 3-51. End cap removal.

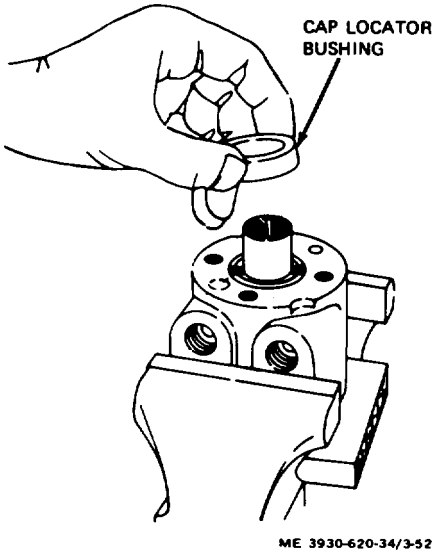

Figure 3-52. Cap locator bushing removal.

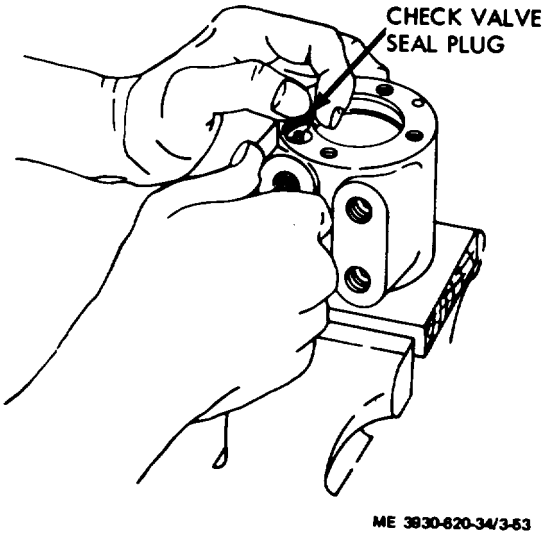

Figure 3-53. Check valve seal plug removal.

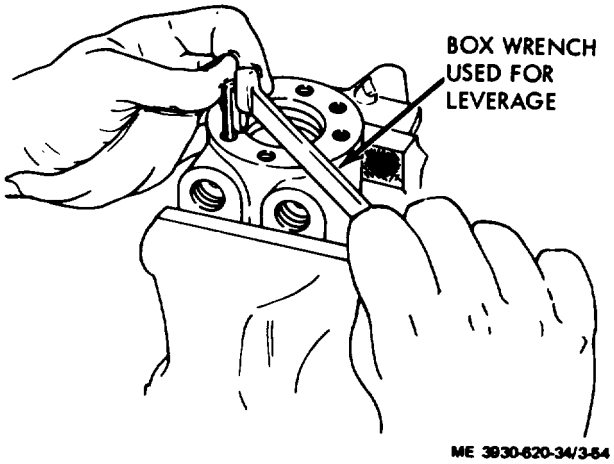

Figure 3-54. Check valve seat removal.

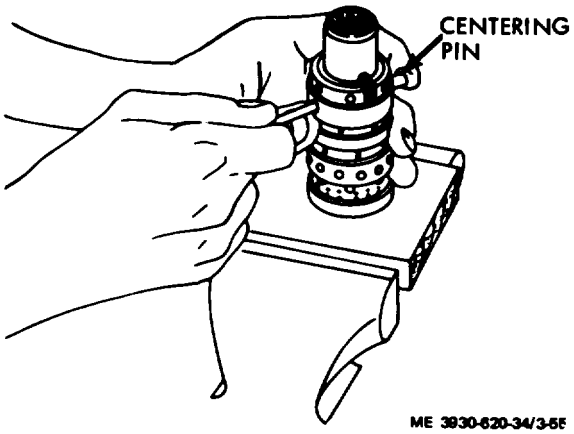

Figure 3-55. Spool assembly being loosened.

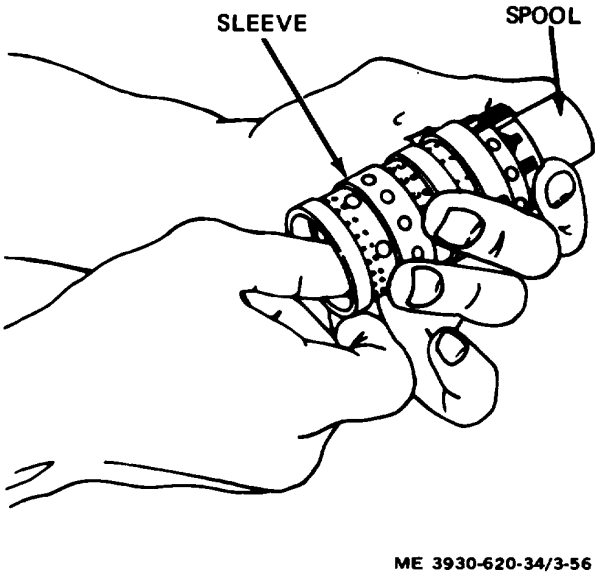

Figure 3-56. Spool being removed from sleeve.

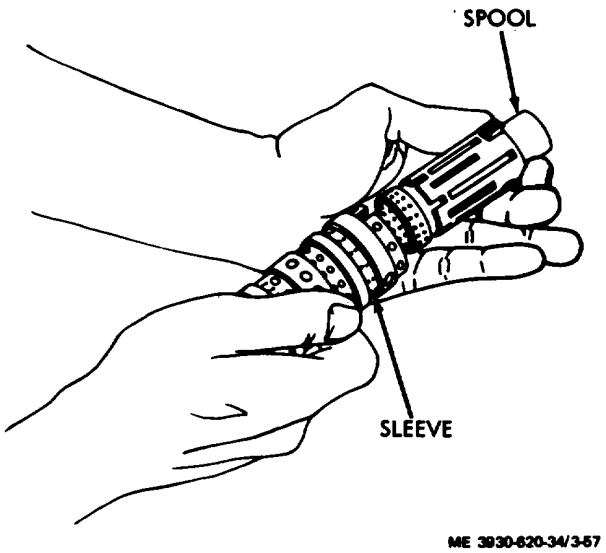

Figure 3-57. Spool removed from sleeve.

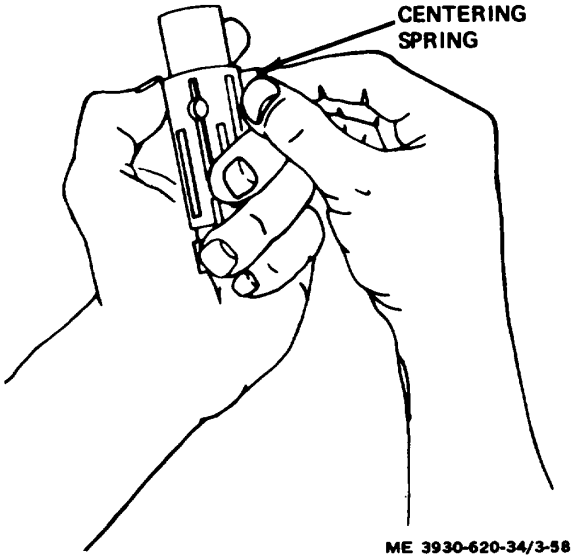

Figure 3-58. Spring being removed from spool.

(b) Remove sharp grit from abrasive paper by cleaning ends of star gear.

(c) both sides of ring gear, both sides of plate, the 14-hole end of housing, and flat surface of end cap by rubbing against abrasive paper.

(6) Polish surfaces of meter section as follows:

Note. When hand polishing, hold parts firmly against abrasive surface.

(a) Stroke each surface across abrasive paper several times.

(b) Check for bright areas on the surface which may indicate the presence of a burr.

(c) Remove burr' by stroking surface across abrasive paper six to ten times.

(d) Inspect each part to insure that surfaces are completely polished.

Warning: Use an approved cleaning solvent. Wear suitable eye protection when using compressed air.

(e) Clean each part in an approved solvent and dry using compressed air.

(f) each cleaned part in an area free of contaminants and other foreign matter.

d. Reassembly

(1) Secure power steer gear housing in a suitable vise with control end facing upward and 14-hole end resting on a clean wooden block.

(2) Clamp vise jaws lightly across the port face.

(3) Install check valve spring into check hole with large end facing downward. (fig. 3-59.)

(4) Install check ball into check hole and insure it rests on top of small end of spring.

(5) Place check valve seat on hex wrench and install it in check valve hole so that machined counterbore seats on check ball. (fig. 3-60.)

(6) Torque check valve seat to 150 inch-pounds.

Note. Check ball does not have to be snugged against seat to function properly.

(7) Test check ball action by pushing ball against the spring force using a small clean pin.

(8) Carefully install spool within the sleeve. (fig. 3-61.)

(9) Insure that spring slots of both parts are located at the same end.

(10) Carefully rotate spool while sliding parts together.

Caution: Insure that spool rotates smoothly in sleeve when fingertip pressure is applied at splined end.

(11) Check spool for freedom of rotation.

(12) With spring slots of both parts aligned, position parts on end and insert spring installation tool through slots in both parts.

(13) Position 3 pairs of centering springs (or 2 sets of three each) on work bench so that extended edge is facing downward and arched center section is together.

(14) While holding this position, insert one end of entire spring set into spring installation tool.

(15) Compress extended end of centering spring set and push it into spool and sleeve assembly while withdrawing installation tool. (fig. 3-62 and 3-63.)

(16) Insure that spring set is centered in the parts so they can be pushed down evenly and flush with the upper surface of the spool and sleeve assembly.

(17) Install centering pin through spool assembly and push into place until centering pin is

flush or slightly below the sleeve diameter at both ends. (fig. 3-64.)

(18) Place power steering gear housing on a solid surface with port facing downward.

(19) Install spool assembly with splined end of spool entering 14-hole end of housing first.

Caution: Use extreme care to insure that parts are correctly positioned during installation.

(20) Push parts gently into position using a slight rotating motion. (fig. 3-65 and 3-66.)

Caution: Insure that spool assembly is properly installed to prevent centering pin from falling into discharge groove of housing.

(21) Position spool assembly into housing bore until flush with 14-hole end of housing.

Caution: Insure that spool rotates smoothly in housing when fingertip pressure is applied at splined end.

(22) Check spool for freedom of rotation.

(23) While holding parts in this position, place 14-hole end of spool assembly on a wooden block in vise jaws.

(24) Clamp vise jaws lightly across the port face.

Note. Insure that new seals are installed.

(25) Install new preformed packing seal on check plug.

(26) Install check plug into check hole using a steady pressure and rocking plug slightly to prevent damage to preformed packing. (fig. 3-67.)

(27) Position large outside diameter chamfer end of cap locator bushing partly into end of housing.

(28) While applying fingertip pressure and rotating cap locator bushing, check that bushing is seating against spool assembly.

(29) Inspect mounting plate seal grooves and insure that grooves are clean and smooth.

Note. Seals are slightly larger than grooves to provide proper sealing. When thin oil seal at exterior of mounting plate is installed, insure that seal is pressed into counterbore so that lip is positioned away from the unit.

(30) Place seals in grooves and apply fingertip pressure to insure proper positioning.

(31) Position thin oil seal at exterior of mounting plate so that lip is away from the unit.

(32) Position mounting plate over spool shaft.

(33) Carefully' slide mounting plate into position over cap locator bushing and insure that seals remain in position.

(34) Align bolt holes in cover with tapped holes in housing.

(35) Check that mounting plate is properly positioned.

(36) Install four mounting plate screws and torque to 250 inch-pounds.

(37) Reposition housing in vise with edges of mounting plate secured in vise jaws.

(38) Insure that spool and sleeve are flush or slightly below 14-hole surface of housing.

Note. Before assembling components, clean all flat surfaces using hand or thumb pressure.

(39) Clean upper surface of housing using hand or thumb.

(40) Position plate so that bolt holes in plate are aligned with tapped holes in housing.

(41) Position meter gear ring on assembly and align bolt holes.

(42) Install splined end of drive shaft into meter gear star.

(43) Insure that slot at control end of drive shaft is aligned with valleys between meter gear teeth.

(44) Push splined end of drive shaft through gear until spline extends approximately one-half the length of spline beyond meter gear star.

(45) Insure that completed assembly remains in this position while installing into unit.

(46) Check positioning of centering pin within the unit.

(47) Install meter gear star into meter gear ring.

(48) Carefully position parts so that drive shaft does not disengage from meter gear star.

(49) Install meter gear star while holding the plate and meter gear ring in position on the assembly. (fig. 3-68).

Caution: Alignment of cross slot in drive shaft with valleys between teeth of meter gear star determines proper valve timing of the unit. There are 12 teeth on the spline and 6 teeth on the meter gear star. Misalignment will result if teeth on spline and teeth on meter gear star are not properly positioned. If parts slip out of position during reassembly, recheck and insure proper alignment.

(50) Rotate meter gear star slowly and engage cross slot of drive shaft with centering pin.

(51) Insure that splined end of drive shaft is seated against plate.

(52) Position spacer at end of meter gear star.

(53) If spacer is not flush with meter gear star surface, drive shaft is not properly engaged with centering pin.

(54) If drive shaft is properly installed, place meter end cap on the assembly.

(55) Install two screws and fingertighten to maintain proper alignment of parts.

(56) Install remaining screws.

(57) Torque seven screws to 150 inch-pounds.

(58) Install steering column by rotating drive shaft and engaging the splines while bringing surfaces into contact with each other.

(59) Install four screws and torque to 280 inch-pounds.

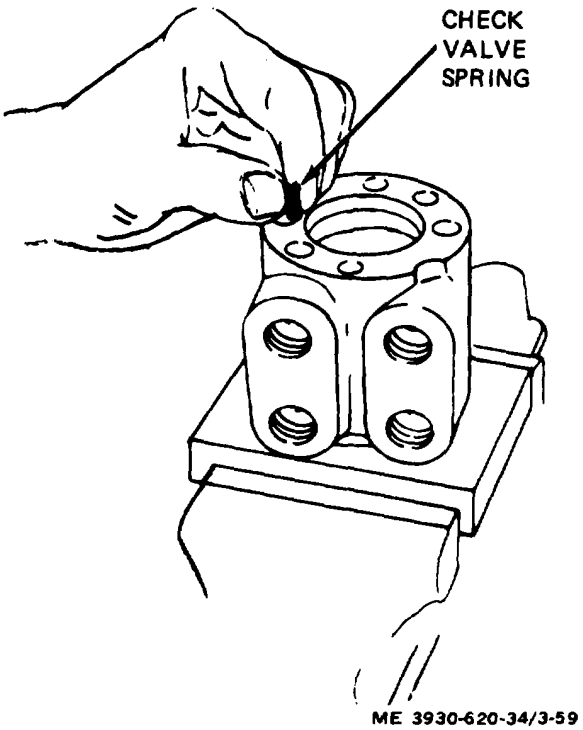

Figure 3-59. Check valve spring being installed.

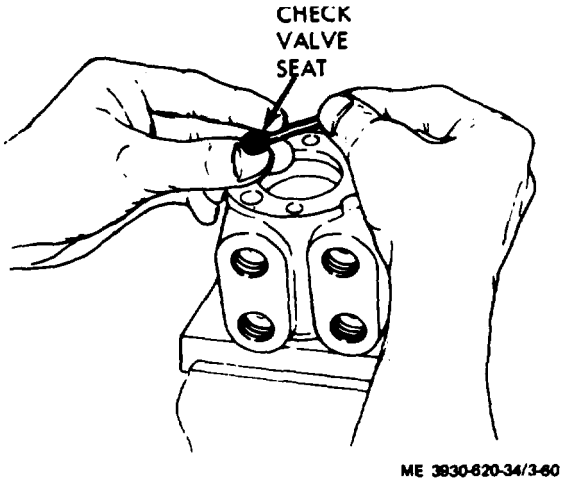

Figure 3-60. Check valve seat being installed.

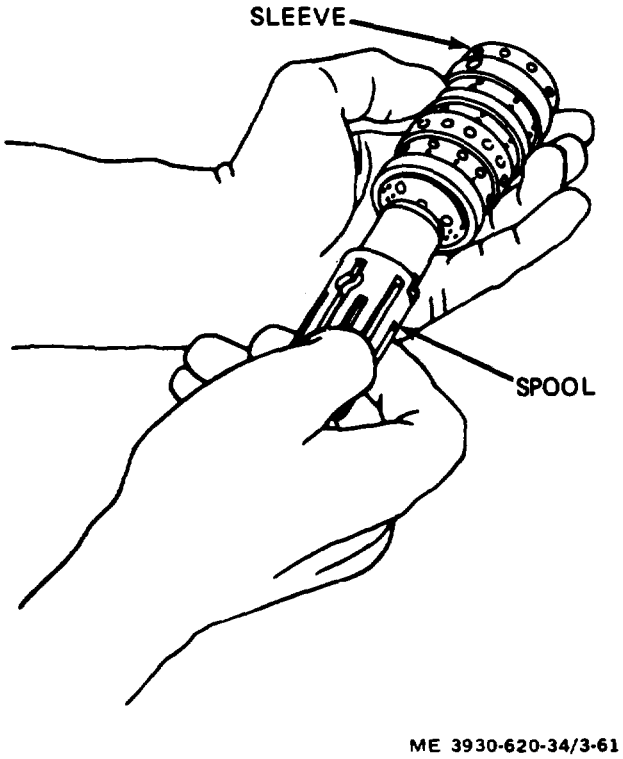

Figure 3-61. Spool being installed in sleeve.

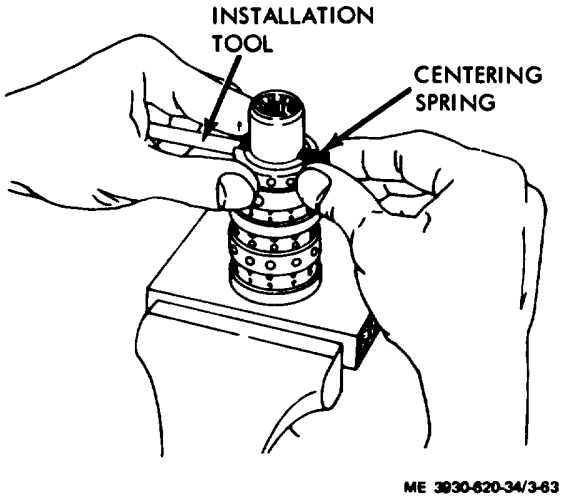

Figure 3-62. Centering spring set being installed.

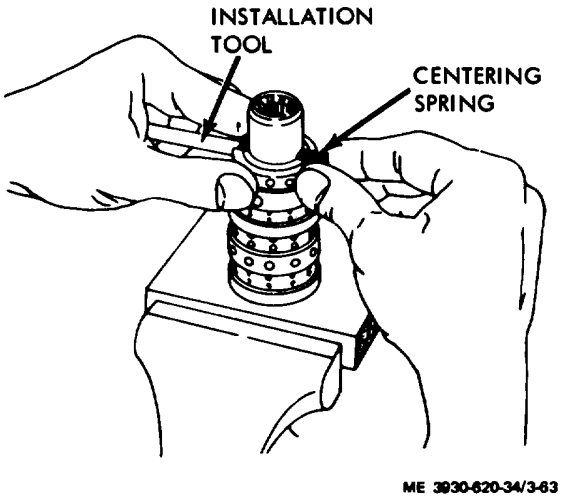

Figure 3-63. Installation tool being removed.

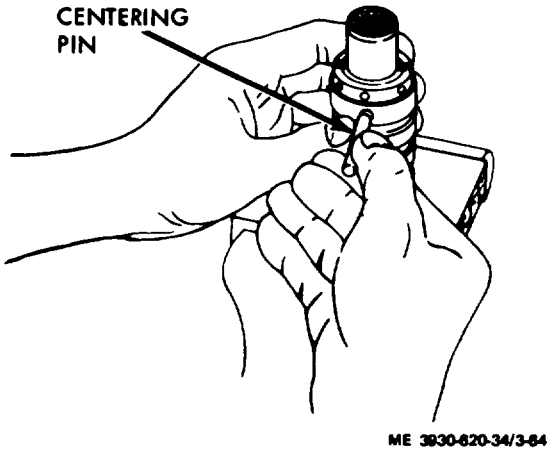

Figure 3-64. :entering pin being installed.

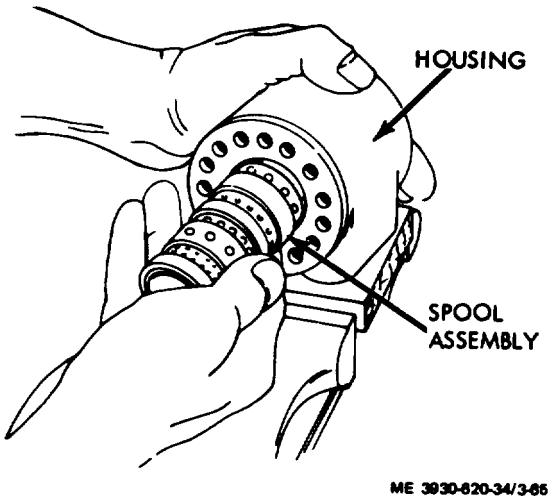

Figure 3-65. Spool assembly being installed.

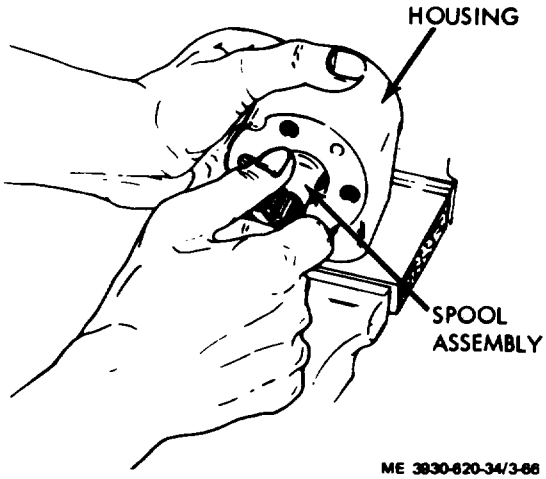

Figure 3-66. Spool assembly installed.

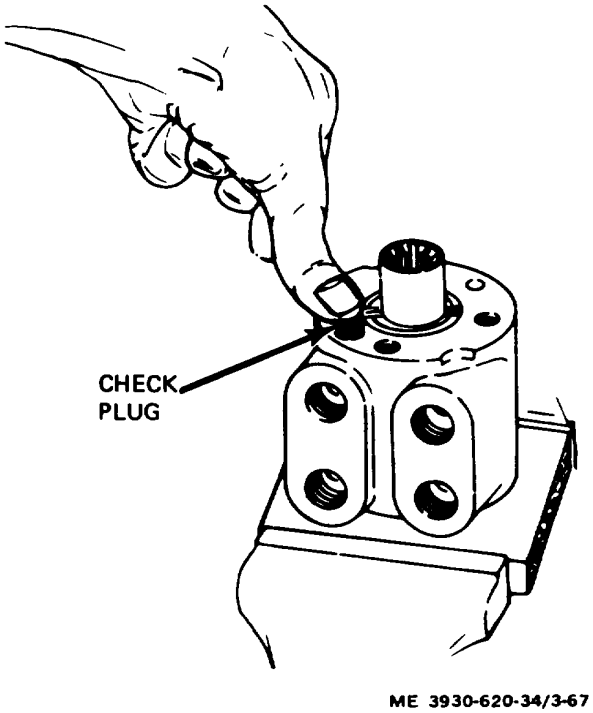

Figure 3-67. check plug being rocked during installation.

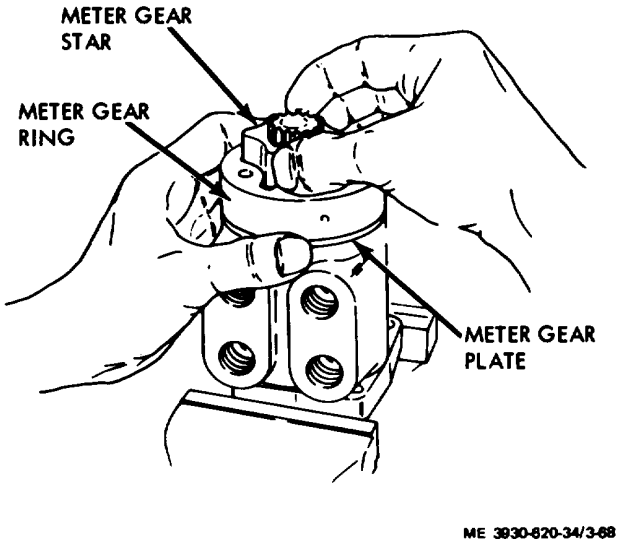

Figure 3-68. Meter gear star being installed.

3-37. Drag Link Assembly

a. Removal. Remove the drag link assembly according to paragraph 2-20.

b. Disassembly. Remove adjusting plug and internal parts. (fig. 3-69.)

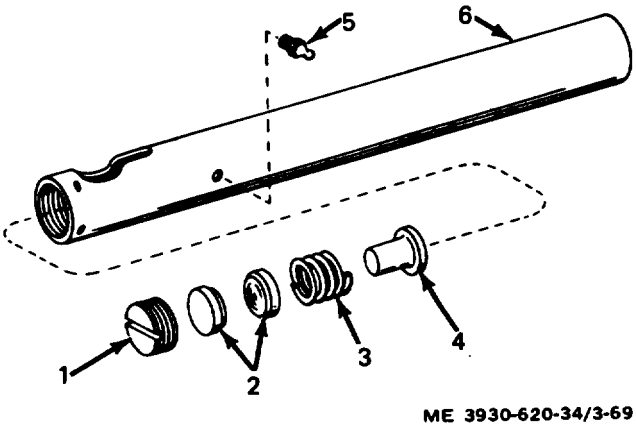

1 Adjusting plug
2. Ball socket seat (21
3. Spring
4. Spring seat
5. Lubrication Fitting
6. Drag link

Figure 3-69. Drag link. exploded view.

c. Cleaning Inspection.

Warning: Use an approved cleaning solvent. Wear suitable eye protection when using compressed air.

(1) Clean all parts in approved solvent and dry using compressed air.

(2) Inspect for worn or damaged springs and ball seats.

(3) Inspect for damaged threads.

d. Reassembly.

(1) Apply a coat of oil to ball seat. (LO 10-3930-620-12.)

(2) Reassemble drag link internal parts in the reverse of figure 3-69.

e. Adjustment. The drag link assembly is adjusted, after installation, according to paragraph 2-20.

3-38. Power Steering Cylinder

a. Removal. Remove the power steering cylinder (TM 10-3930-620-12).

b. Disassembly.

(1) Remove the lock ring (1, fig. 3-70) securing the spacer (2) in position and remove the spacer.

(2) Remove the lock ring (3) securing the head (4) in the cylinder (15) and remove the head from the cylinder by pulling out the rod and piston assembly.

(3) Carefully slide the head off the rod (14). Remove the wiper ring (6), backup ring (7), and packing (8) from the head.

(4) Remove the nut (9) securing the piston (10) to the rod (14). Slide the piston off the rod.

(5) Remove the backup rings (12) and the packing (13) from the piston. Remove the rod seal (11) from the rod.

(6) If the lubrication fitting (17) is damaged, replace it.

(7) If the bushing (16) requires replacement, press it out with a suitable tool or arbor press.

c. Cleaning, Inspection and Repair.

(1) Clean the metal parts in a suitable solvent and dry them with compressed air. Wipe the seals clean, using hydraulic oil as a solvent.

(2) Inspect the tube bore, rod, head, and piston for cracks, scratches, scoring or other damage, and excessive wear. Inspect the seals for damage or excessive wear.

(3) Slight imperfections can be cleaned up with a polishing stone. Replace any damaged or excessively worn parts.

d. Reassembly. Reassemble the cylinder by reversing the disassembly procedure. Lubricate the cylinder parts with a light coating of hydraulic oil. Be careful not to damage seals against threads or sharp edges during reassembly. When installing the head assembly, compress the lock ring. Keep it compressed while sliding the head into the tube until the lock ring can snap into place.

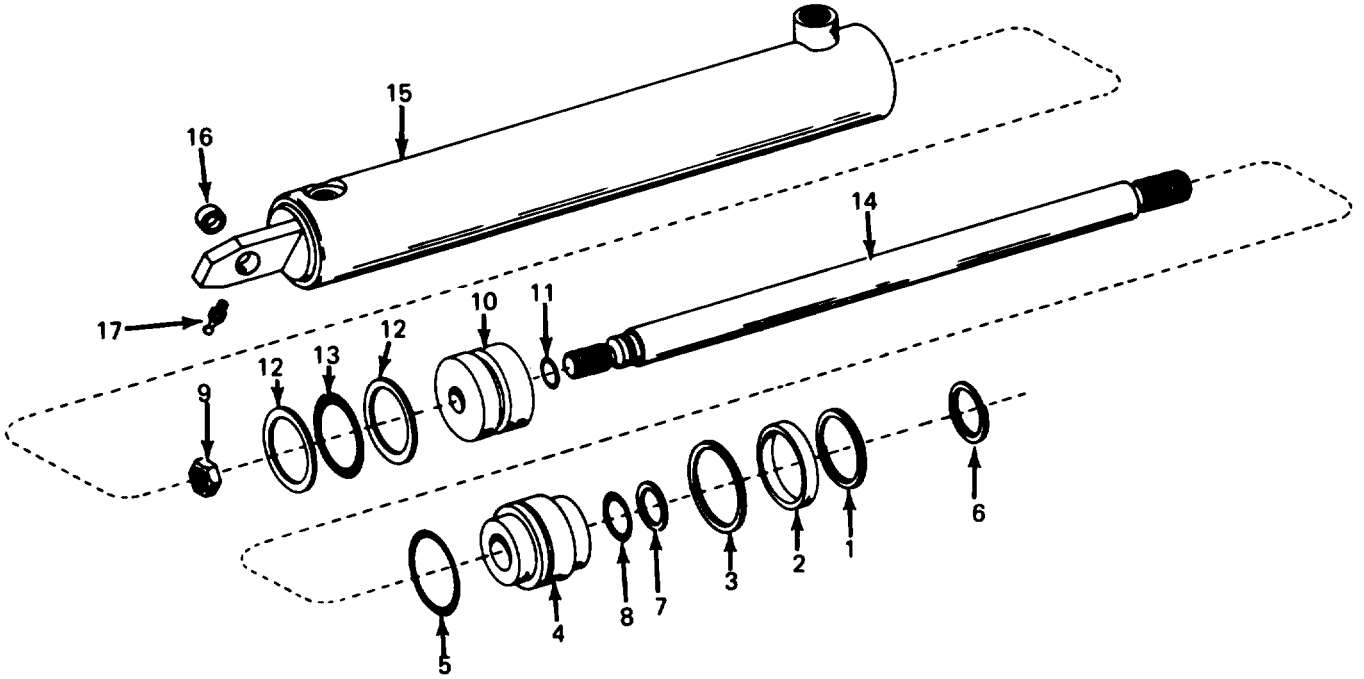

ME 3930-620-34/3-70

1. Lock ring
2. Spacer
3. Lock ring
4. Head
75. Packing
6. Wiper ring
7. Backup ring
8. Packing
9. Nut
10. Piston
11. Seal
12. Backup ring (2)
13. Packing
14. Rod
15. Cylinder
16. Bushing
17. Lubrication fitting

Figure 3-70. Power steering cylinder, exploded view.

3-39. Power Steering Pump

a. General. The power steering pump is used to provide a constant supply of oil pressure to the power steering gear. A relief valve is incorporated in the pump to protect the power steering hydraulic system in the event of excessive hydraulic pressure.

b. Removal. Remove the power steering pump according to paragraph 2-12.

c. Disassembly. (fig. 3-71.)

(1) Secure power steering pump in vise.

(2) Remove screws (1) securing housing and stator.

(3) Remove stator from housing.

(4) Remove retaining rings (15), drive gear (13), and key (17) from drive shaft (10).

(5) Remove drive shaft by pulling shaft through gear housing.

(6) Pull idler shaft (12) from gear housing.

(7) Remove retaining rings (16), gear (13), and pin (14).

Note. Record number of turns required to remove adjusting screw.

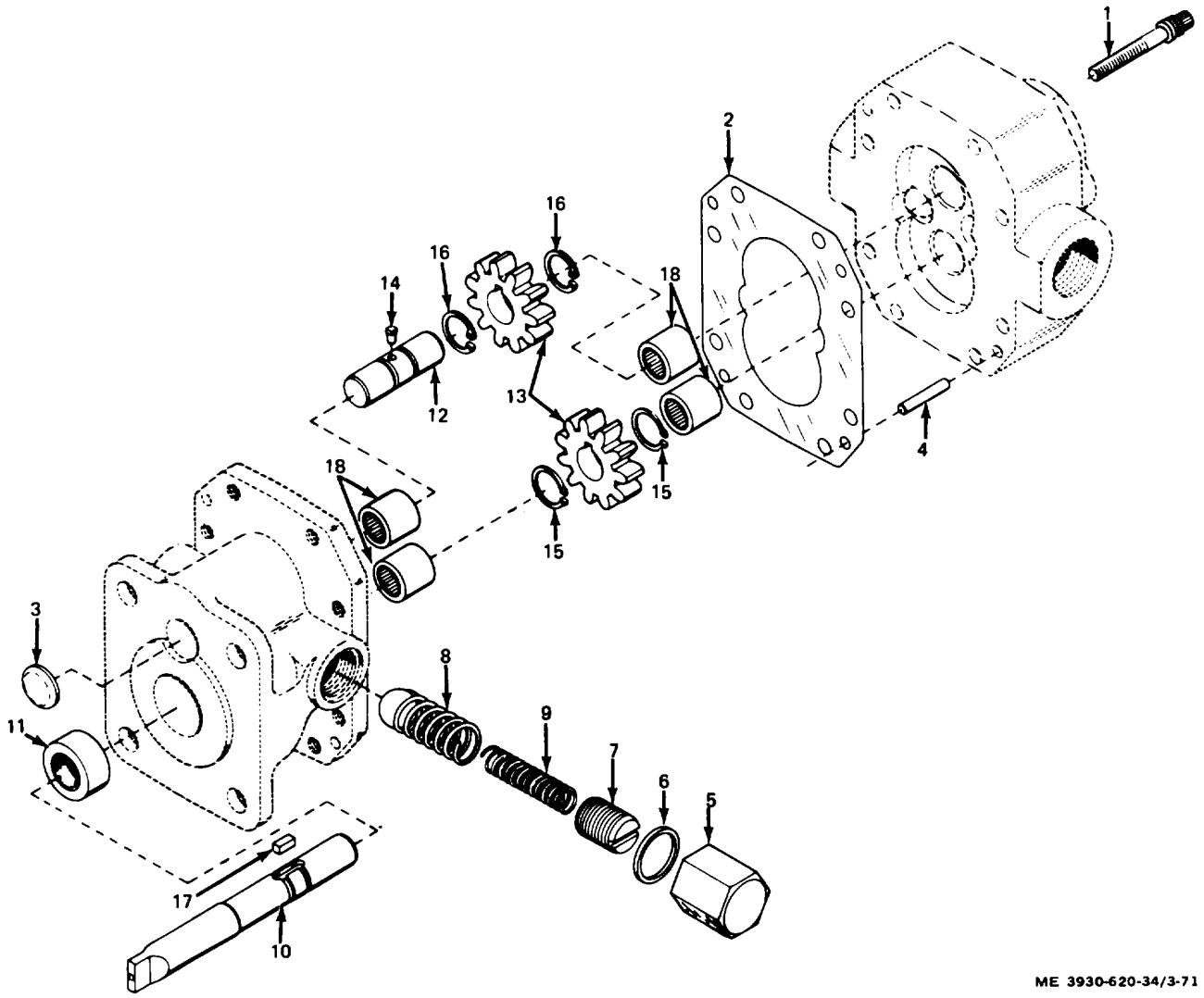

1. Screw
2. Gasket
3. Plug
4. Pin
5. Cap nut
6. Gasket
7. Screw
8. Spring and ball assembly
9. Spring
10. Drive shaft
11. Seal
12. Idler shaft
13. Gear (2)
14. Pin
15. Retaining ring (2)
16. Retaining ring 121
17. Key
18. Bearing 141

Figure 3-71. Power steering pump, exploded view.

(8) Remove relief valve cap nut (5), copper gasket (6), adjusting screw (7), and spring and ball assembly (8).

(9) If needle bearings (18) or oil seal (11) are to be changed, use a puller to remove them from housing and / or stator.

d. Cleaning and Inspection.

Warning: Use an approved cleaning solvent. Wear suitable eye protection when using compressed air.

(1) Clean all parts, except oil seal, in solvent and dry using compressed air.

(2) Inspect needle bearings for wear, scoring, or damage.

(3) Inspect idler shaft for wear, scoring, or dam age.

(4) Drive and idler shafts should be .4387 inch diameter, minimum. Input end of drive shaft should be .5000 inch diameter, minimum.

(5) Inspect drive shaft for wear, scoring, or dam age.

(6) Check oil seal in gear housing for damage or leakage of oil.

(7) Inspect gears and gear housing for wear, galling or scoring.

(8) Inspect pump coupling for wear or damage.

(9) Replace all parts that are worn or damaged.

e. Reassembly. (fig. 3-71.)

Note. Insure that each part is coated with hydraulic oil before assembling.

(1) Carefully install needle bearings (18) and oil seal (11) in stator and gear housing.

(2) Carefully slide drive shaft (10) through oil seal in gear housing.

(3) Install one snap ring (15) and key (17) on drive shaft.

(4) Position gear (13) on shaft and secure in position using a second snap ring (15).

(5) Preassemble idler shaft assembly before installing in gear housing:

(a) Position pin (14) in idler shaft (12) and install one snap ring (16).

(b) Slide idler gear (13) into position on idler shaft and secure using a second snap ring (16).

(6) Position idler shaft assembly into gear housing.

(7) Mesh idler shaft gear with drive shaft gear.

(8) Measure running clearance between gears and gear housing.

(9) Insure that running clearance is between 0.0003 and 0.0008 of an inch.

Note. Shims are manufactured in five thicknesses: 0.00025, 0.0005, 0.0003, 0.002, and 0.001 inch.

(10) Select proper thickness of shims to obtain the proper gear to housing clearance.

(11) Position shim(sl on gear housing mating surface and assemble housings.

(12) Secure stator and gear housing using screws (1).

(13) Torque screws to 130 inch-pounds.

(14) Position ball and spring assembly (8) in relief valve port.

(15) Install adjusting screw 171) by turning adjusting screw the same number of turns required during removal.

(16) Install copper gasket (6) and cap nut (5) on adjusting screw.

f. Adjustment. The power steering pump is adjusted, after installation, according to paragraph 2-12.

3-40. Power Steering Pump Motor

a. General Troubleshooting.

(1) For excessive noise: Inspect motor for loose parts (thrubolts and hold-down screws), improper alignment of cover bands, unbalanced armature, and faulty bearings.

(2) For hot motor: Heat measured with a thermometer should not exceed maximum temperature rise as indicated on motor nameplate.

(3) For excessive load: Excessive load may prevent motor from starting or accelerating to full speed. Check for excessive load by measuring current input to motor.

(4) Armature and field coil overheating: Test armature and field coils according to subparagraph f below.

b. Removal. Remove the power steering pump motor according to paragraph 2-13.

c. Inspection. Minimum diameter for undercutting is 2 1/8 inches.

(1) Loosen screw and remove cover band to gain access to commutator and brushes.

(2) Clean and blow out accumulated dirt and dust. Dirt in vent passages and air gap may cause overheating.

Caution: Do not use emery cloth or paper on the commutator.

(3) Check commutator for burning, roughness, or high mica. If rough or blackened, clean by holding a piece of 00 sandpaper against the commutator with a block of wood. Carbon film on commutator is normal and should not be removed.

Caution: Do not use lubricant or solvent on commutator.

(4) Mica undercut depth is 1/64 inch minimum, 3/64 inch maximum. Sides of commutator bars should be free of mica. Undercut, if necessary, with a piece of hacksaw blade.

(5) Inspect armature and field coils for charred or burned varnish or insulation. A burned condition indicates overheating caused by a malfunctioning in the armature or field coils. Excessive overheating can destroy armature coils and burn commutator bars. If this condition is found, the motor should be replaced.

d. Brush Inspection and Replacement.

(1) Depress brush spring .13, fig. 3-72) and remove from brush holder assembly (4).

(2) Remove screw (11 and take out brush (2).

(3) With brushes out, inspect commutator

according to subparagraph c, above, and for grooves, pits, and other signs of extreme wear.

(4) Replace brush when brush shunt is 1/ 16 inch from slot in brush holder. Check that the brushes move freely in the holder assembly.

(5) Check that brush spring tension is 30 ounces ± 20%

(6) Reassemble the brush, spring, and screw, making sure the screw connection is clean and tight.

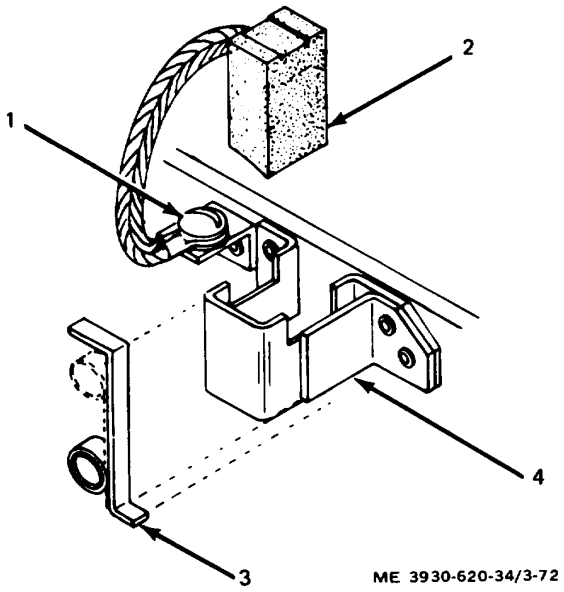

1. Retaining screw (2)
2. Brush (2)
3. Brush (2)
4. Brush holder assembly

Figure 3-72. Power steering pump motor, brush location.

e. Disassembly and Reassembly. If it is necessary to disassemble the motor, follow the sequence of figure 3-73. Reassemble in the reverse order.

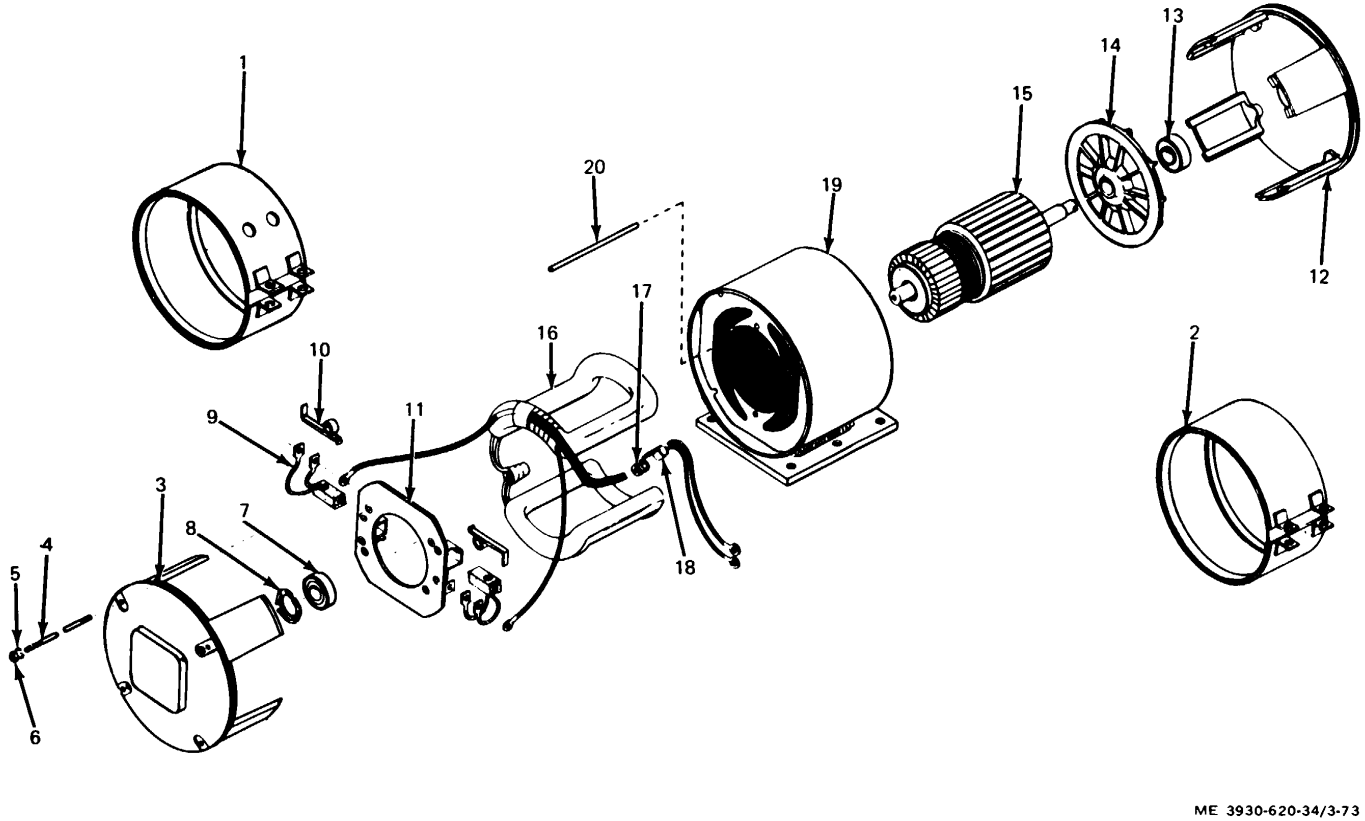

1. Cover band
2. Cover band
3. Commutator hood
4. Thru-bolt (4)
5. Lock washer (4)
6. Nut (4)
7. Ball bearing
8. Spring washer
9. Electrical contact brush (2)
10. Brush spring (2)
11. Brush holder assembly
12. Fan hood
13. Ball bearing
14. Fan
15. Armature
16. Field winding
17. Grommet
18. Strain bushing
19. Stator
20. Pin (2)

Figure 3-73. Power steering pump motor, exploded view.

f. Test.

(1) Check the armature for shorts by placing it on a "growler" and with a steel strip or a hacksaw blade held on armature core, rotate armature. If blade vibrates, armature is shorted in area of the core below the vibrating blade. Copper or brush dust in slots between commutator bars sometimes causes shorts which can be eliminated by cleaning out slots. Shorts at crossovers of coils at core end can often be eliminated by bending wire slightly and reinsulating exposed bare wire. If shorts cannot be eliminated, armature must be replaced.

(2) To test armature for grounds, place one probe of test lamp on armature core or shaft and place the other probe on each commutator bar in turn. If lamp lights, armature is grounded and must be replaced.

(3) To test for grounded fields, place one probe of test lamp on field frame and the other probe on field terminal. If lamp lights, field coils are grounded and must be replaced if ground cannot be located and repaired.

3-41. Steer Axle

a. Removal. Remove the steer axle according to paragraph 2-21.

d. Disassembly. Disassemble according to figure 3-74 and as follows:

(1) Remove mounting blocks (47) from steer axle and press off the bushings (48).

(2) Remove spindles (38 and 39) by pressing out spring pins (34), king pins (36), and needle bearings (40).

(3) To remove tie rods, remove cotter pins (2), and loosen adjusting plugs (10 and 18).

(4) To remove pivot arm, remove lubrication fitting (25), elbow (26), washers (27 and 28), wedge bolt (24) and pin (29). If it is necessary to replace a ball stud, file off staked area of stud before removing it.

Caution: Make certain all staked area has been filed off before removing stud.

c. Cleaning and Inspection.

(1) Clean parts with a solvent such as mineral spirits, and dry with compressed air. Check all parts for wear and damage.

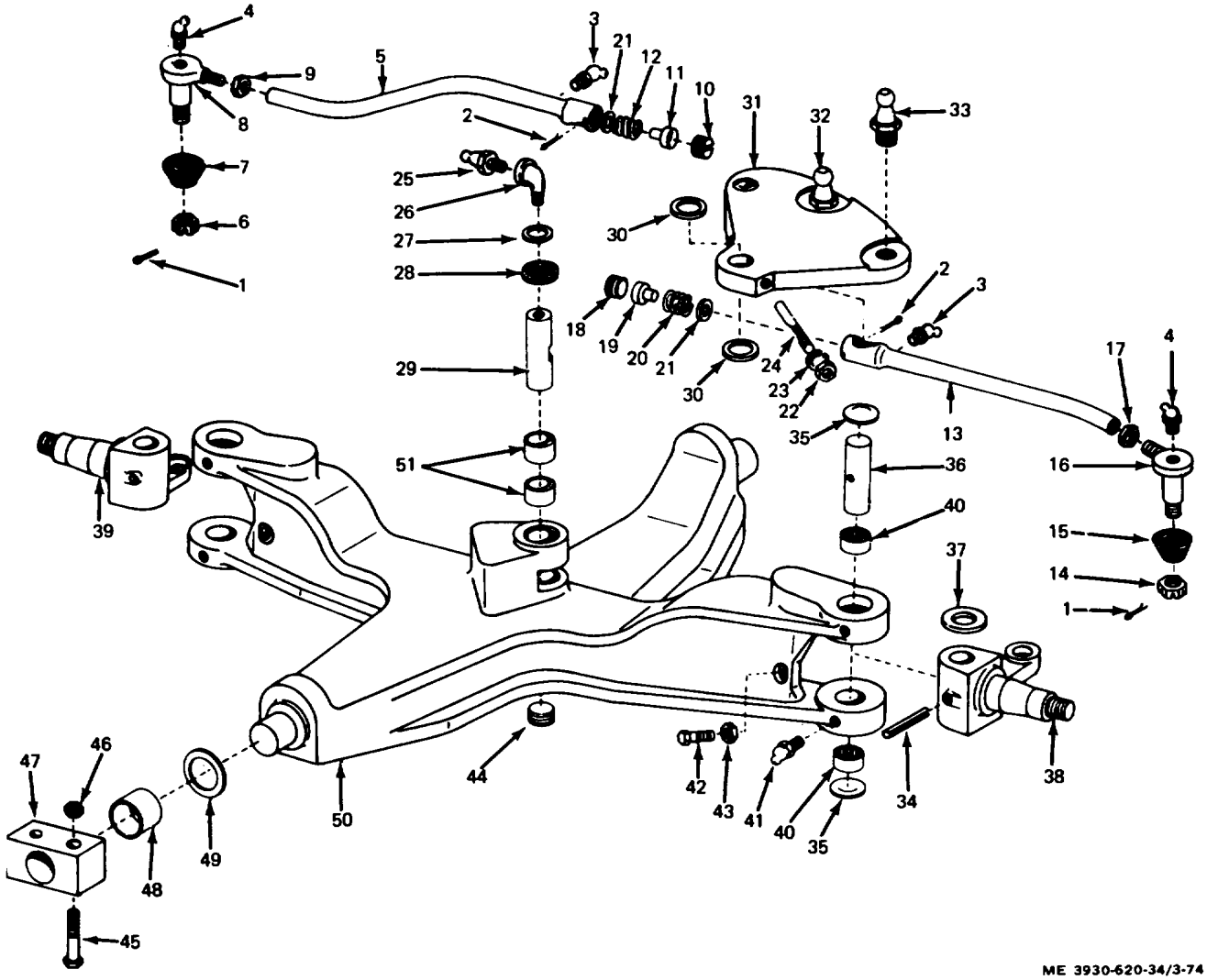

1. Cotter pin (2)
2. Cotter pin (2)
3. Lubrication fitting (2)
4. Lubrication fitting (2)
5. Right-hand tie rod assembly
6. Slotted nut
7. Tie rod assembly
8. Tie rod end
9. Nut
10. Adjusting plug
11. Ball socket seat
12. Spring
13. Left-hand tie rod assembly
14. Slotted nut
15. Tie rod end cover
16. Tie rod end
17. Nut
18. Adjusting plug
19. Ball socket seat
20. Spring
21. Washer
22. Nut
23. Lock washer
24. Wedge bolt
25. Lubrication fitting
26. Elbow
27. Washer
28. Rubber washer
29. Pin
30. Thrust washer (2)
31. Pivot arm
32. Tie rod end ball stud (2)
33. Drag link ball stud
34. Spring pin (2)
35. Expansion plug (4)
36. Steering knuckle king pin (2)
37. Spindle thrust bearing (2)
38. Left-hand spindle
39. Right-hand spindle
40. King pin needle bearing (4)
41. Lubrication
42. Screw (2)
43. Nut (2)
44. Pipe plug
45. Screw (4)
46. Nut (4)
47. Mounting block (2)
48. Bushing
49. Washer (2)
50. Axle
51. Bushing (2)

Figure 3-74. Steer axle exploded view.

(2) Maximum wear allowed for parts is as follows:

Mounting arm bushings. 0.005-0.010 inch
Mounting arm journals. 0.005-0.010 inch
Pivot arm pin. 0.005-0.010 inch
Pivot arm bushings. 0.005--0.010 inch
Tie rod and drag link balls. No set limit. Replace ball when out of round (or when plugs can no longer be set snug against ball.
(3) Relubricate parts according to LO 10-3930-620-12.

Note. Plugs are used to close off the normal location of lubrication fittings on the ball sockets. If necessary, these plugs may be replaced with lubrication fittings for external greasing of the ball sockets.

(4) The ball sockets of the tie rods must be packed with high-quality chassis lubricant per LO 10-3930-620-12.

d. Reassembly. Reassemble in the reverse order of figure 3-74.

Section VI. DRIVE GROUP

3-42. General

The drive unit is a double reduction, full-floating, internal gear drive, with drive wheels and differential assembly supported by tapered roller bearings. The axle drive shafts (jackshafts) are supported by double row thrust bearings. The differential carrier is mounted at the center of the drive axle housing. The ring gear is bolted to the differential case, which in turn houses the spider gears. The pinion gear is mounted on the drive motor armature shaft. Double reduction is obtained through the spiral bevel ring and pinion gears and an internal tooth ring gear (bull gear) within each drive wheel.

3-43. Drive Axle Noise

a. Drive axle noise may originate in the drive train because of misalignment or improperly adjusted drive train components (e.g. alinement of the drive axle and drive motor, ring and pinion gear adjustments). The drive train should be disassembled just far enough to remedy or reduce noise level. Parts should be reassembled at the lowest noise level. The following visual and operational checks and adjustments are designed to detect, reduce, and / or eliminate drive axle noise:

(1) Visually check differential oil level and insure that the specified lubricant is being used in differential. (LO 10-3930-620-12.)

(2) Operate lift truck in forward and reverse gears for a short period of time under the following conditions: 1) full acceleration, 2) coasting, and 3) tight left and right turns. Note any noise in drive train while operating lift truck under these conditions and then refer to steps (a) through (c) to aid in identifying cause of noise.

(a) Noise from the drive train during full acceleration and not heard during coasting may indicate misalignment of the drive train components, such as between the drive axle and drive motor.

(b) Noise heard while the lift truck is coasting and not heard during full acceleration may indicate worn parts (e.g. worn bearings) or excessive play between parts (e.g. ring and pinion gear).

(c) Noise heard while turning the lift truck to the right may indicate the noise is in the left side of the drive train (bull gears, jackshaft, etc.). Noise heard while making a tight left turn may indicate the source of the noise is in the right side of the drive train (bull gear, jackshaft, etc.).

(3) If noise cannot be located, raise front end of lift truck, using a suitable lifting device, until drive wheels are above the ground.

(4) Install blocking and remove lifting device.

(5) Operate the drive motor in forward and reverse while varying the speed of drive wheels.

(6) Listen to noise level to determine source of noise.

(7) If source of noise cannot be located after performing steps (2) through (6), a complete disassembly and inspection of each component will have to be performed.

Note. After each visual check and each mechanical adjustment. perform an operational check of drive motor to determine if noise level has been reduced or eliminated.

(8) Readjust wheel bearing adjusting nut by loosening adjusting nut and torquing nut to 50 foot-pounds while rotating wheel six times in each direction.

(9) Loosen adjusting nut between 30 degrees minimum) and 60 degrees (maximum) to allow insertion of cotter pin.

(10) Install cotter pin but do not secure.

(11) drive motor and listen to noise level.

(12) If noise level is unchanged, set torque wrench to a different value and torque adjusting nut.

(13) Operate drive motor and listen to noise level. Insure that adjusting nut is torqued to the value that provides the lowest noise level.

(14) After adjusting wheel bearings to lowest noise level, measure the backlash between the bull

gear and jackshaft gear at internals of (60 degrees around the hull gear.

(15) Insure that backlash is between 0.008 and 0.012 inches.

(16) Using a dial indicator, check backlash at one of the bull gear retaining screws.

(17) If backlash between bull gear and jackshaft gear retaining screws.

(18) Check that bull gear and jackshaft gear are properly lubricated according to LO 10-3930-620-12..

(19) Insure that areas between the teeth of the bull gear are filled with grease to approximately 3/4 to 7/8 the height of the teeth.

(20) Clean and check each bull gear tooth contact pattern.

(21) Insure that contact pattern is located at the same point on each tooth, of equal length, and that pitting or peening is not present.

(22) Operate drive train without the drive wheels installed and check noise level.

(23) If noise is present, remove jackshaft and operate drive motor in forward and reverse gear.

(24) If noise is not present after performing step (23), inspect the differential side gear splines
and jackshaft splines.

(25) Loosen drive motor support bracket nuts.

(26) Operate drive motor and check noise level while varying the amount of looseness of the bracket nuts.

(27) Secure drive motor support bracket in position of lowest noise level.

(28) Loosen front drive axle mounting pad bolts.

(29) Operate drive motor and check noise level.

(30) If noise level remains the same, loosen rear drive axle pad bolts.

(31) If noise level is reduced, check flatness of axle and frame mounting pads.

(32) Check each mounting pad on drive axle and frame for flatness and squareness.

(33) Place a straight bar stock across drive axle pads and check for parallelness.

(34) Insure that mounting pads are parallel with each other and on the same horizontal plane.

(35) Repeat steps (32) through (34) for frame mounting pads.

(36) Check screws securing drive motor flange to differential carrier and drive axle housing to carrier.

(37) If any bolts require tightening, operate drive motor and check for change in noise level.

(38) If noise level remains the same, remove drive wheel from drive axle housing.

(39) Install drive wheel and bearings on spindle.

(40) Mount a dial indicator on the spindle.

(41) Check run out of bull gear face and inside diameter of bull gear teeth. (fig. 3-75.)

(42) Insure that run out on bull gear face does not exceed 0.010 inch.

(43) Insure that run out on inside diameter of bull gear teeth does not exceed 0.005 inch.

(44) If run out of bull gear face and inside diameter of bull gear teeth are within allowable limits. remove mast. drain differential, and remove differential cover.

(45) Operate drive motor and check noise level.

(46) Mount a dial indicator on differential carrier.

(47) Check backlash between ring and pinion gears at four positions (90 degrees apart).

(48) Insure that backlash is between 0.005 and 0.010 inch or as etched on pinion gear face.

(49) If backlash setting is adjusted, check noise level.

(50) If noise level is not reduced after backlash setting is adjusted, reset backlash at several settings within the range.

(51) Set backlash at lowest noise level within the range.

(52) If noise level does not change after backlash adjustment, check ring and pinion gear tooth contact.

(53) Apply a coat of red lead, white lead, or prussian blue to ring gear teeth.

(54) Rotate ring gear slowly until a good tooth contact pattern is made in ring gear tooth coating.

(55) Adjust tooth contact pattern as indicated in figure 3-76 by shimming.

(56) Recheck backlash if tooth contact pattern has been adjusted.

(57) Check clearance between pinion gear face and differential case.

(58) Insure that clearance is 0.156 -0.002 inch.

(59) Add or remove shims between drive motor mounting flange and differential carrier, as required. (para 3-47e (16) (a).)

(60) Check noise level after shimming pinion gear.

(61) Remove carrier caps from carrier and lift differential end bearings with differential from carrier.

(62) Check differential end bearings for foreign matter, uneven wear, or scoring.

(63) Check differential carrier bearing mount diameter.

(64) Insure that diameter measures 3.150 +0.003 inches T.I.R. (total indicator reading). (fig. 3-77.)

(65) Check diameter of machined relief in differential carrier for the drive motor mounting flange.

(66) Insure that diameter measures between 11.001 and 11.003 inches to pilot drive motor flange onto differential carrier drive motor mounting flange. (fig. 3-77.)

(67) If diameter of machined relief is less than 11.001 inches, drive motor may not mate flush with carrier and could cause misalignment of pinion and ring gear.

(68) Relief diameter can be increased to specified dimension (11.001 to 11.003 inches) by turning differential on a lathe to remove excess material.

(69) Check that ring gear mounting screws are tightened.

(70) Remove drive motor and drive axle from lift truck.

(71) Separate differential carrier from drive motor mounting flange.

(72) Clean mounting flange.

(73) Mount a dial indicator on pinion gear face.

(74) Check run-out of mounting flange and insure that run-out is less than 0.003 inch T.I.R.

(75) Check each mounting pad on drive axle and frame for flatness and squareness.

(76) Place a straight bar stock across drive axle pads and check for parallelness.

(77) Insure that mounting pads are parallel with each other and on the same horizontal plane.

(78) Repeat steps (75) through (77) for frame mounting pads.

(79) With drive motor removed from lift truck, operate motor with pinion gear attached.

(80) Check for noise in drive motor or seat brake assembly.

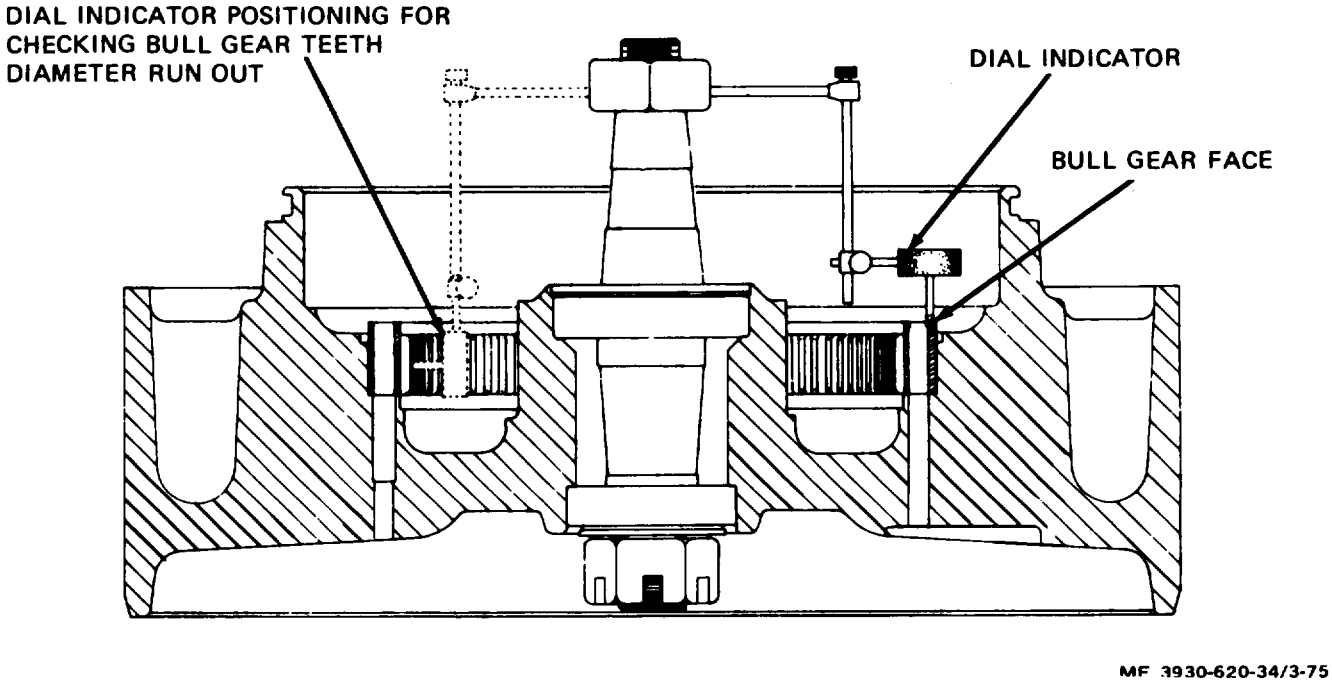

Figure 3-75. Checking bull gear teeth and face runout.

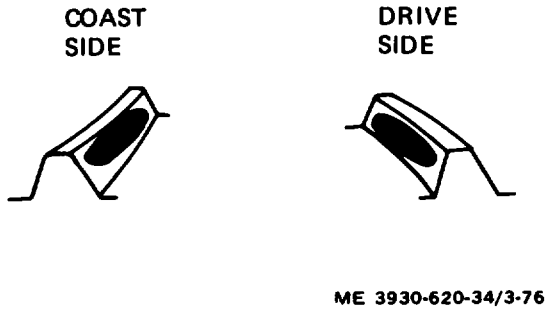

Figure 3-76. Proper tooth contact pattern.

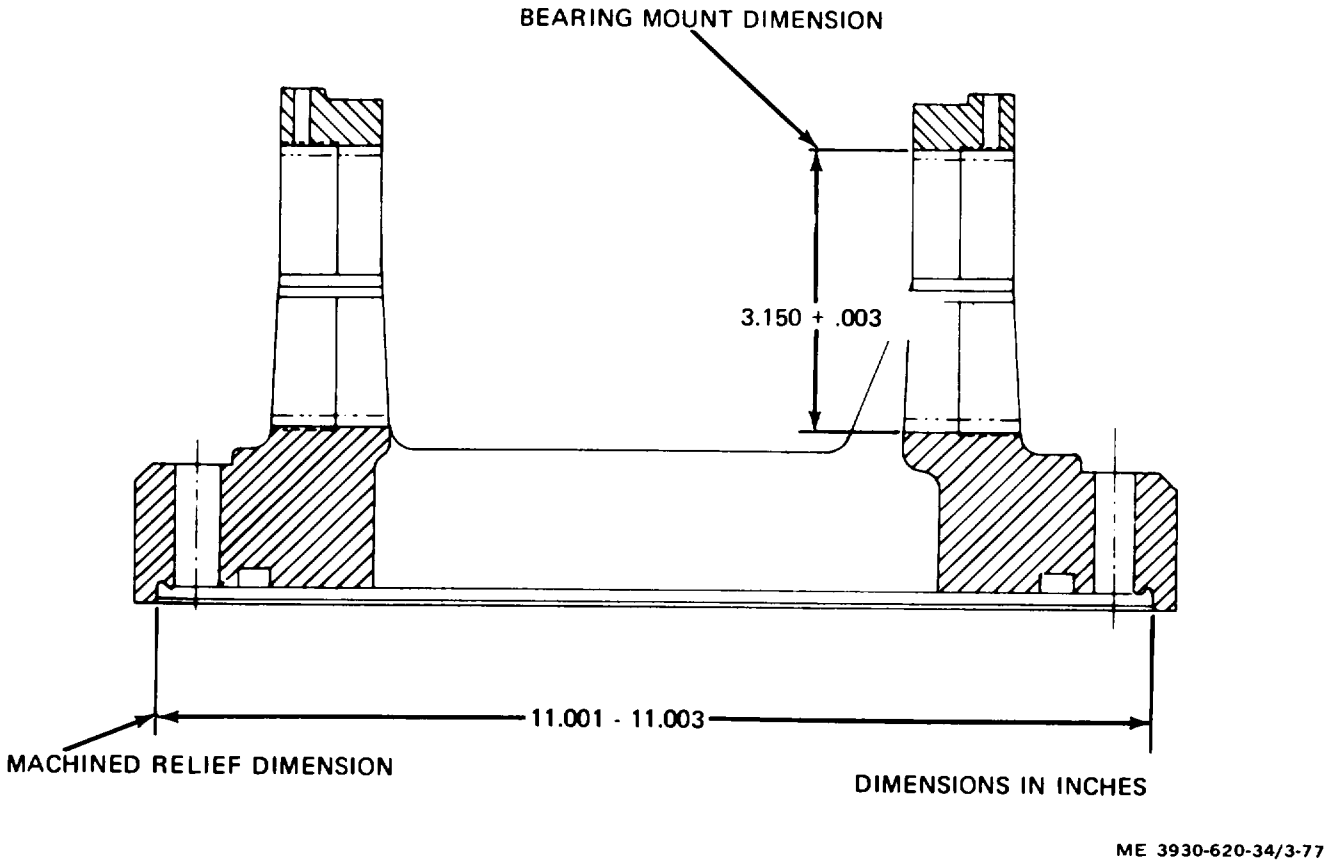

Figure 3-77. Differential carrier dimensions.

3-44. Jackshaft

a. Removal, Cleaning, and Inspection.

(1) battery and discharge capacitors (para 2-5).

(2) Install wheel chocks forward and aft or rear wheels to prevent lift truck from moving.

(3) Using a suitable lifting device, raise front end of lift truck above the ground, as required.

(4) Install blocking and remove lifting device.

(5) Remove drive wheel assembly (TM 10-3930-(620- 12).

(6) Remove screws securing dust shield.

(7) Remove dust shield.

(8) Remove screws securing axle shaft cap.

(9) Remove axle shaft cap.

(10) Install puller in threaded hole in end of jackshaft. (fig. 3-78.)

(11) Carefully remove jackshaft and bearing assembly as a unit.

(12) Straighten prongs of lock washer.

(13) Remove lock nut, lock washer, and washer.

(14) Place jackshaft assembly in suitable press.

Caution: Use care to prevent damaging axle shaft cap.

(15) Remote bearings and bearing cap.

(16) Slide retainer cap off jackshaft

(17) Remove inner oil seal from drive unit housing.

(18) Clean and inspect all parts.

Note. Whenever jackshaft is removed. oil seals shall be shall be replaced.

(19) Replace oil seals and damaged or worn parts.

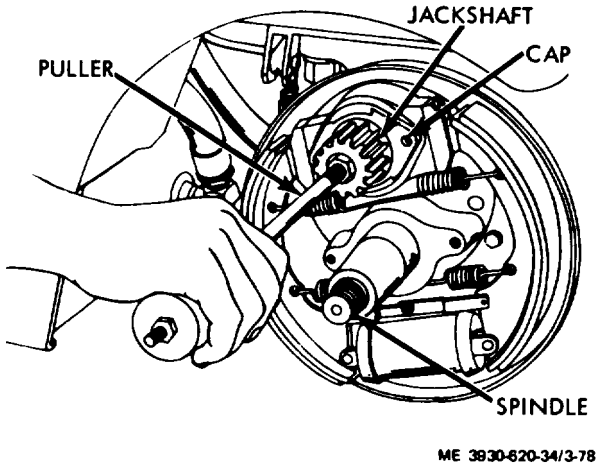

Figure 3-78. Jackshaft removal.

b. Installation. Wheel bearings and jackshaft bearings shall not be lubricated with grease containing molybdenum-disulfide which is also known

as Moly-grease. Use only a heavy duty wheel bearing grease. Lubricate using a tool designed to force grease between rollers. Do not paint, dip, or swab by hand.

(1) Lubricate bull gear and jackshaft pinion according to LO 10-3930-620-12.

(2) wheel bearings and jackshaft bearings according to LO 10-3930-620-12.

(3) Install retainer cap, bearing cup, and bearings on jackshaft assembly.

(4) Install washer, lock washer, and lock nut.

(5) Tighten lock nut until there is a slight preload on bearings.

(6) Lock in position using prongs on lock washer.

(7) Install new inner oil seal in drive unit housing.

(8) Position jackshaft assembly in drive unit housing.

(9) Using a soft mallet, tap jackshaft into proper position.

(10) Secure axle shaft cap to housing using screws.

(11) Install dust shield and secure using screws.

(12) Install drive wheel assembly (TM 10-3930-620-12).

3-45. Spindle

a. Removal, Cleaning, and Inspection.

(1) Remove drive wheel assembly (TM 10-3930-620-12).

(2) Remove dust shield.

(3) Remove cotter pin, lock nut and washer from inboard end of spindle. (fig. 3-78.)

(4) Install spindle puller and remove spindle.

(5) Inspect spindle and bearings.

(6) If spindle and bearings are damaged, replace as required.

b. Installation.

(1) Position spindle in drive wheel housing.

(2) Install washer and lock nut.

(3) Tighten lock nut until spindle is properly seated.

(4) Install cotter pin.

(5) Install bearings and dust shield.

(6) Install drive wheel assembly (TM 10-3930-620-12).

3-46. Differential

a. General. Whenever it becomes necessary to adjust differential carrier backlash, the drive unit may remain installed or may be removed from the lift truck. If drive unit is to be removed from the lift truck to adjust differential carrier backlash, refer to paragraph 3-47 for disassembly procedures.

b. Adjusting Backlash.

(1) Position lift truck on level ground.

(2) Remove mast assembly in accordance with paragraph 2-19.

(3) Drain differential housing oil. If oil is to be reused, insure that oil is drained into a clean container.

(4) Remove screws securing front housing cover to drive axle housing.

Note. Whenever front housing cover is removed. a new gasket should be installed.

(5) Remove front housing cover from lift truck.

(6) Remove drive wheels (TM 10-3930-620-12).

(7) Remove jackshafts (para 3-44).

Note. Complete removal of jackshafts is not necessary at this time. Ensure that jackshaft ends are free of differential case.

(8) Using a dial indicator, check ring gear laterally for 0.005 to 0.010 inch backlash.

(9) Check backlash at four positions (90 degrees apart on ring gear. (fig. 3-79.)

Caution: Whenadjusting backlash, rotate each adjusting nut exactly the same distance to maintain proper bearing preload.

(10) Backlash is increased by removing lock, loosening adjusting nut nearest ring gear, and tightening opposite nut.

(11) Backlash is decreased by removing lock, loosening adjusting nut farthest from ring gear, and tightening opposite nut.

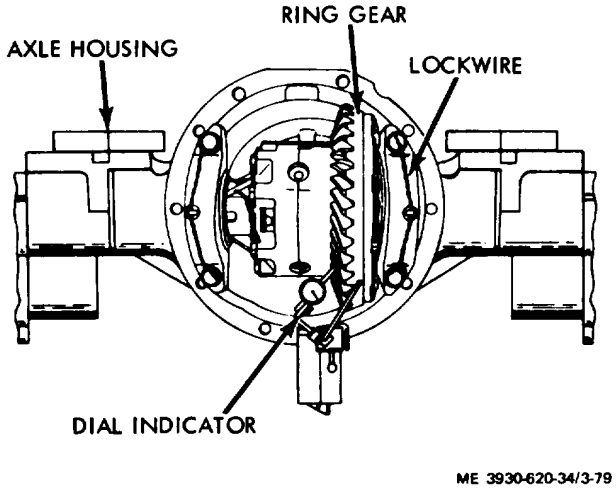

Figure 3-79. Ring gear backlash being checked.

3-47. Drive Unit

a. General. The drive axle housing and drive motor should be removed as an assembly to service the drive axle. Refer to paragraph 2-23 for removal and installation procedures.

b. Disassembly of Axle Housing. Disassemble according to the sequence of figure 3-80 and as follows:

(1) Remove jackshaft (para 3-44).

(2) Remove brake shoe assemblies (TM 10-393(0-620-1 2).

(3) Remove screws securing backing plate 121, fig. 3-80.

(4) Remove backing plate from housing.

(5) Remove cotter pin, locknut (14), and washer (15) from spindle (16).

(6) Install spindle puller and remove spindle.

c. Disassembly of Differential Carrier. (fig. 3-81, 3-82, and 3-83.)

Caution: Use extreme care when removing carrier from drive motor to prevent damage to shims. Identify and tag shims during removal according to number and size so they may be reassembled in the same order.

(1) Remove screws securing differential carrier to drive motor.

(2) Remove carrier from drive motor.

(3) Remove, identify, and tag shims according to number and size.

(4) Remove all lockwires from screws securing case halves and caps.

Note. Mark caps and carrier housing to insure proper reassembly.

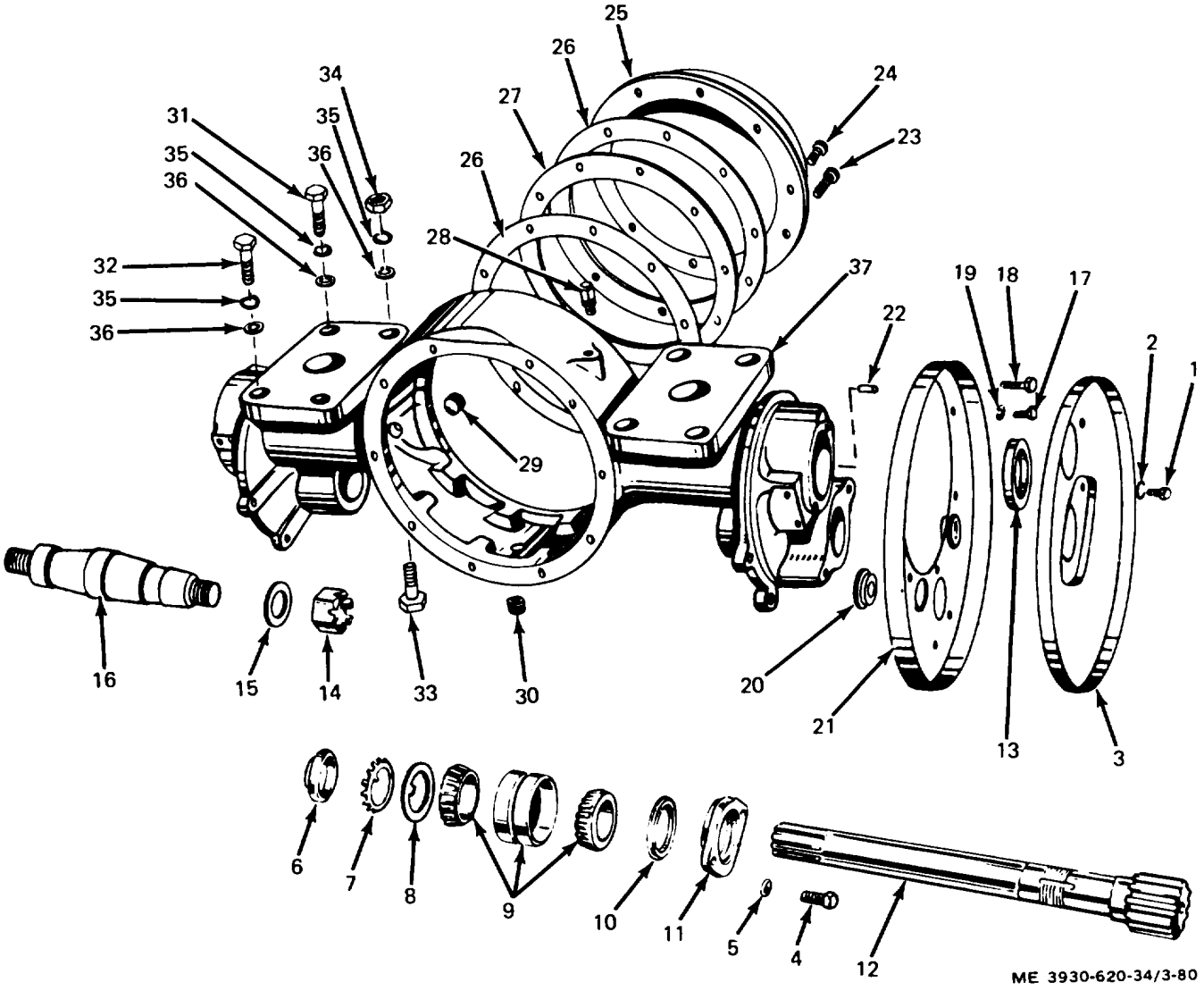

Figure 3-80. Drive axle housing and shafts. exploded view.

KEY to fig. 3-80:

1. (4)
2. washer (2)
3. shield (2)
4. Screw (4)
5. washer (4)
6. Nut (2)
7. Washer (2)
8. Washer (2)
9. Tapered roller bearing (4)
10. Seal (2)
11. Axle retainer (2)
12. -Axle shaft (2)
13:. Seal (2)
14. Slotted nut (2)
15. Washer (2)
16. Wheel spindle (2)
17. Screw (2)
18. Screw (8)
19. lock washer (10)
20. Protective plug (4)
21. drive wheel brake backing plate (2)
22. Pin (4)
23:. Screw (8)
24. Screw (2)
25. Axle housing cover
26. Gasket (2)
27. Ring spacer
28. Axle housing breather
29. Pipe plug
30. Pipe plug
31. Screw (2)
32. Screw (4)
33. Screw (2)
34. nut (2)
35. lock washer (8)
36. Carrier washer (8)
37. Drive housing

(5) Remove screws securing caps to carrier housing.

(6) Remove caps.

(7) Remove adjusting nuts, bearings, and bearing cup.

Note. Alignment marks on case halves are to be used whenever case is reassembled.

(8) Remove screws securing case halves together.

(9) Remove plain case, gears, thrust washers, and spider gear.

(10) Remove lockwire and special screws. securing ring gear to flanged case.

Note. Ring gear is pinned in place.

(11) Drive out groove pins and separate gear and case.

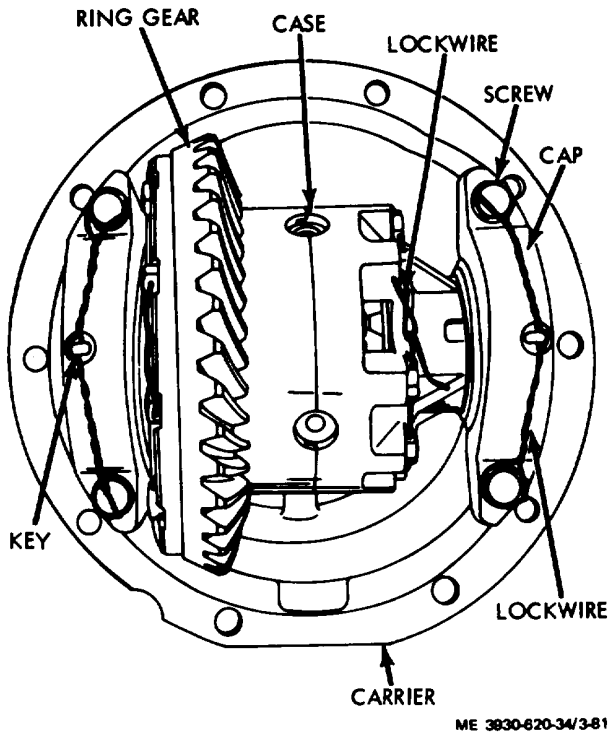

Figure 3-81. Differential and carrier assembly, component location.

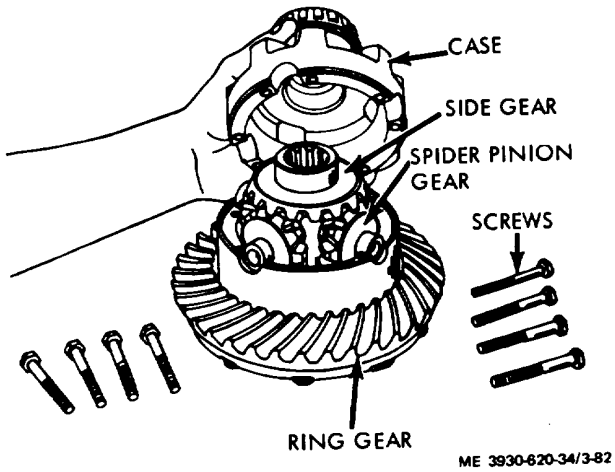

Figure 3-82. Differential, partially disassembled.

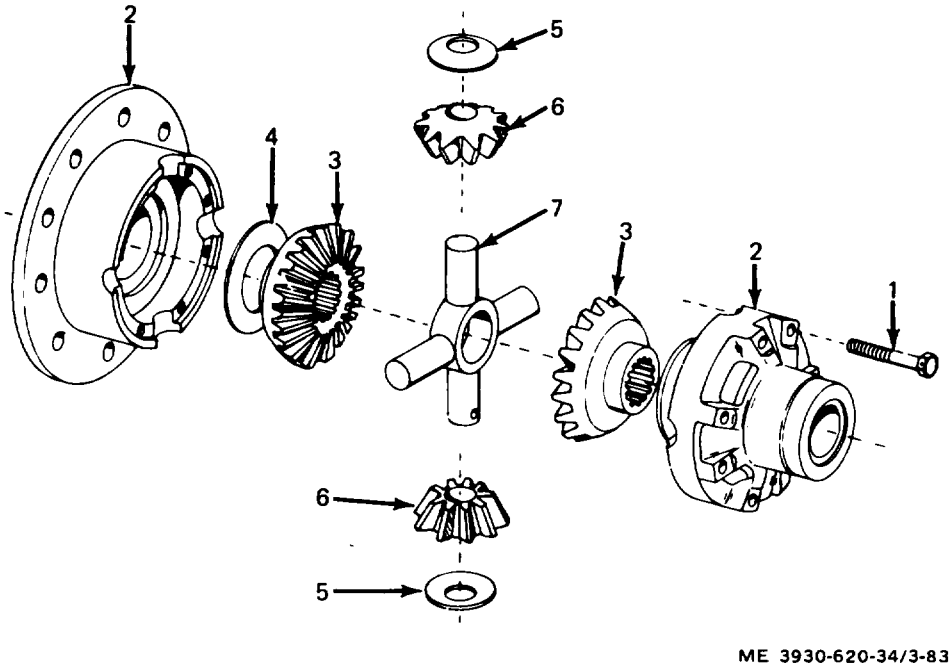

1. Screw
2. Case assembly
3. Side gear
4. Spacer
5. Spacer
6. Pinion
7. Shaft

Figure 3-83. Differential. Exploded view.

d. Cleaning and Inspection.

Note. Ring gear and pinion shall be replaced as a set. Thrust washers shall be replaced as matching sets**.**

(1) all parts for excessive wear, damaged, or broken parts. Spacers shall be 1 / 32 inch, minimum.

(2) excessively worn, damaged, or broken parts.

e. Reassembly. (fig. 3-81, 3-82, and 3-83.)

(1) Install groove pins in ring gear.

(2) Install ring gear by drawing up gear using special mounting screws.

(3) Lockwire screws in position.

(4) Assemble spider pinion gears, thrust washers. and side gear on spider.

Note. Insure that alignment marks on case halves are matched.

(5) Install spider assembly into differential case.

(6) Install and tighten screws on case.

(7) Lockwire screws in position.

(8) Place differential case in carrier.

Caution: Ensure that markings on caps and housing are matched before installing caps.

(9) Install differential bearings, adjusting nuts, bearing caps, and screws. Do not fully tighten screws.

(10) Loosen adjusting nut at ring gear end by rotating adjusting nut to the right as far as possible and pulling ring gear up tight against adjusting nut.

(11) Tighten adjusting nut opposite ring gear by rotating adjusting nut to the right as far as possible.

(12) Wrap a cord around the differential case and attach a spring scale to the loose end.

(13) Gradually pull on the scale and note the effort required to rotate case.

(14) Check that case starts and maintains rotation at less than 3 pounds of pull.

(15) Install carrier assembly on drive motor but do not install shims.

(16) Measuring for Shims.

(a) Differential case installed in carrier. (fig. 3-84.)

1. Obtain a flat piece of bar stock approximately O.1.25 inch thickness.

2. Measure and record the exact thickness of the bar stock in thousandths of an inch.

3. Place bar stock on face of pinion gear,

taking care that bar stock is flat on face of pinion gear and does not ride on the shaft.

4. Using a feeler gauge, measure the remaining distance between bar stock and outside diameter of differential case.

5. Add the thickness of bar stock and feeler gauge measurement. The total measurement will be referred to as sum A.

Note. A measurement is etched on the pinion gear and ring gear. Insure both measurements are identical, then record the measurement.

6. If measurement is a + (plus), then add it to 0.156 inch.

7. If measurement is a (minus), then subtract it from 0.156 inch.

8. The result obtained in step 6 or 7 will be referred to as sum B.

9. Subtract sum A from sum B. The difference is the thickness of shims required between carrier housing and drive motor housing.

10. Measure and install the required shims on the drive motor.

11. Reinstall and secure the carrier.

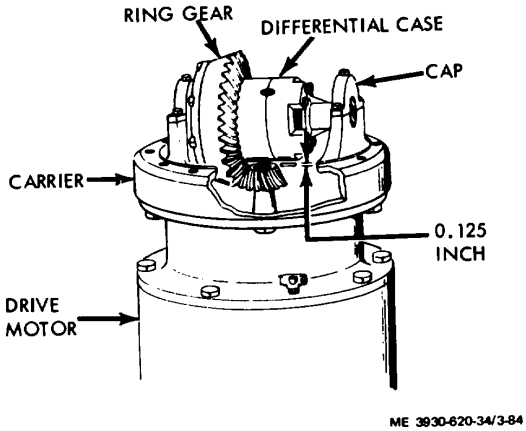

Figure 3-84. Measuring for shims.

(b) Differential case removed from carrier.

1. Remove screws securing carrier caps and remove caps.

2. Remove differential assembly from carrier.

3. Place a flat piece of 1.2220 inch thick bar stock on the pinion gear of the motor.

Note. Bottom side should be drilled out so that armature shaft does not prevent bar from lying flat.

4. Place a piece of round bar stock approximately 7 1/ 4 inches long by 3.142 inches diameter across carrier.

5. Measure distance between bar stock and add amount etched on pinion gear.

6. Subtract measurement obtained in step 5. from 0.040. inch to obtain total measurement of required shims.

7. Install the required shims and reinstall differential assembly on carrier.

8. Install caps and secure with screws.

9. Using a dial indicator, check ring gear laterally for backlash at four position (90 degrees apart). Backlash should be 0.005 and 0.010 inch.

Caution: When adjusting backlash, rotate each adjusting nut exactly the same distance to maintain proper bearing preload.

10. Backlash is increased by removing lock, loosening adjusting nut nearest ring gear, and tightening opposite nut.

11. Backlash is decreased by removing lock, loosening adjusting nut farthest from ring gear, and tightening opposite nut.

(17) The remaining reassembly and installation is in the reverse order of disassembly.

(18) Attach motor and carrier to drive axle housing.

(19) Install drive unit assembly in lift truck.

(20) Install drive wheels.

(21) Install mast assembly and attach forks.

(22) Connect all lines, hoses, cables, etc.

(23) Replace fluids in differential and hydraulic oil reservoir (LO 10-3930-620-12).

(24) Bleed brake system (TM 10-3930-620121.

3-48. Drive Motor

a. General. The drive motor is a dc series wound, flange mounted type. A replaceable armature shaft is employed, mounted on a sealed bearing at the commutator end and a double row thrust bearing at the drive end. Dual metal graphite brushes are supported in fixed, box type holders to assure proper brush alignment. A metal clip on top of each brush forms a stop device that prevents commutator scoring.

b. Brush and Brushholder Service. Brushes can be replaced without removing the drive motor from the truck, as follows:

(1) Disconnect battery and discharge capactiors (para 2-5).

(2) Remove the toe and the floor plates (TM 10-3930-620-12).

(3) Remove the rear cover from around the stator.

(4) Remove brush retaining screws, lift brush retaining springs, and withdraw brushes from brush holder. (fig. 3-85)

Note. Before new brushes are installed. they should be contoured on a sanding drum with the same diameter as the commutator. Hold brushes to sanding drum to obtain the same radius and brush angle on contact face as was on old brushes. Final seating can be maintained with a fine mesh seating stone while conmmutatior is turning.

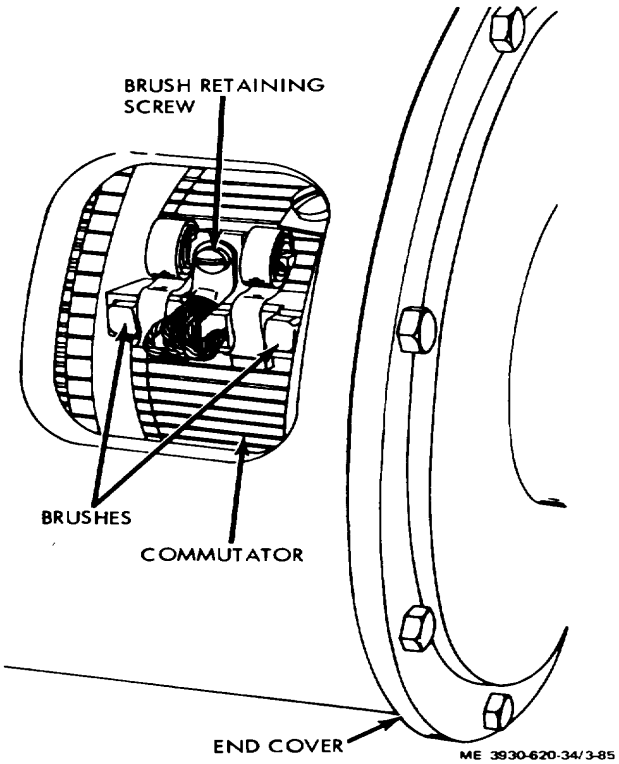

Figure 3-85. Brush location.

c. Removal. To remove the drive motor without removing the drive axle assembly, refer to paragraph 2-22. To remove the drive motor and drive axle assembly as a unit, refer to paragraph 2-23.

d. Motor Disassembly. (fig. 3-86.)

(1) Place the drive motor in a clean working area.

(2) Remove seat brake lock nut, drum, hub, brake assembly, and woodruff key from shaft.

(3) Remove rear cover (1) from around stator (3), remove brush retaining screws (9), lift brush retaining springs (81 and withdraw brushes (10) from brush holders (14).

(4) Place motor on end with drive end up.

Caution: Use extreme care whenever using a gear puller or center of shaft will be damaged. An improper puller will flare out shaft center, damaging threads to the extent of requiring a new armature shaft. Use a shaft protector in conjunction with the gear puller.

(5) Remove cotter key, nuts, pinion gear, and key from armature shaft. Use a gear puller to remove the pinion gear.

Caution: Lift armature straight up carefully to avoid damage to commutator or core.

(6) Remove screws (19) and lock washers (20) securing rear end plate (21) to stator (41).

Attach chain to rear end plate and, with chain hoist.

lift armature. bearings, retainer and end plate_ lip and out of stator. (fig. 3-87.)

(7) Remove shaft key and remove end plate.

(8) Bend the tabs of the bearing lock washer 123. fig. 3-86) down then, using a spanner wrench, remove the lock nut (22).

(9) Using a gear puller with a shaft protector, remove the retainer (29) from the armature shaft.

The seal and bearing will come off with the retainer. (fig. 3-88.)

(10) Remove the bearing from the retainer.

Note Bearing is of the single shield type and can be regreased. All old grease should be removed from the bearing and the bearing thoroughly, washed out. Check the bearing for running smoothness and replace if any roughness is in evidence. Repack bearing only half full with grease. Grease the bearing according to LO 10-3930-620-12.

Caution: Overgreasing bearing will cause overheating, so care must be taken to make certain grease cavity is packed only half full. When reassembling make certain shield faces outward. (11) Remove and inspect retainer preformed packing. Replace seal if worn or damaged. Seal is a light press fit.

Note. Bearing retainer with seal must be installed on shaft before installing bearing.

(12) Remove and replace commutator end bearing if worn or damaged as it is a sealed type and cannot be lubricated.

(13) Remove fan by applying a steady amount of pressure against the back side of the fan.

The fan is hand pressed on against a key, angled up on the backside to prevent fan from being pressed on too far and causing possible damage to armature windings.

(14) Remove end cover capscrews and remove end cover and rocker arm assembly.

(15) Field coils should not be removed unless replacement is required. To remove, loosen slotted screws securing pole shoes to stator, remove shims behind pole shoes, noting quantity and location of the shims and remove screws, pole shoes, and coils. (fig. 3-89.)

Caution: Handle field coils carefully to avoid damaging insulation.

e. Specifications.

H.P	8.33
RPM	1080
Volts	36
Amps	200
Duty	1hr
Service Factor	1.0

C Rise Windings 90
C Rise Comm 105
Field Exc. Volts 36

f. Inspection. Clean all parts, except armature and field coils, with a clean solvent such as mineral spirits. Inspect for signs of unusual wear, broken or damaged parts. Replace all broken, damaged, or excessively worn parts. Check for broken insulation or loose connections and repair or replace if needed.

Note. Armature and fields may be wiped clean with a damp cloth saturated with a solvent. Do not soak, dip or wash.

g. Test.

Caution: Whenever connections have to be soldered, a resin flux must be used. Acid flux must never be used on electrical connections.

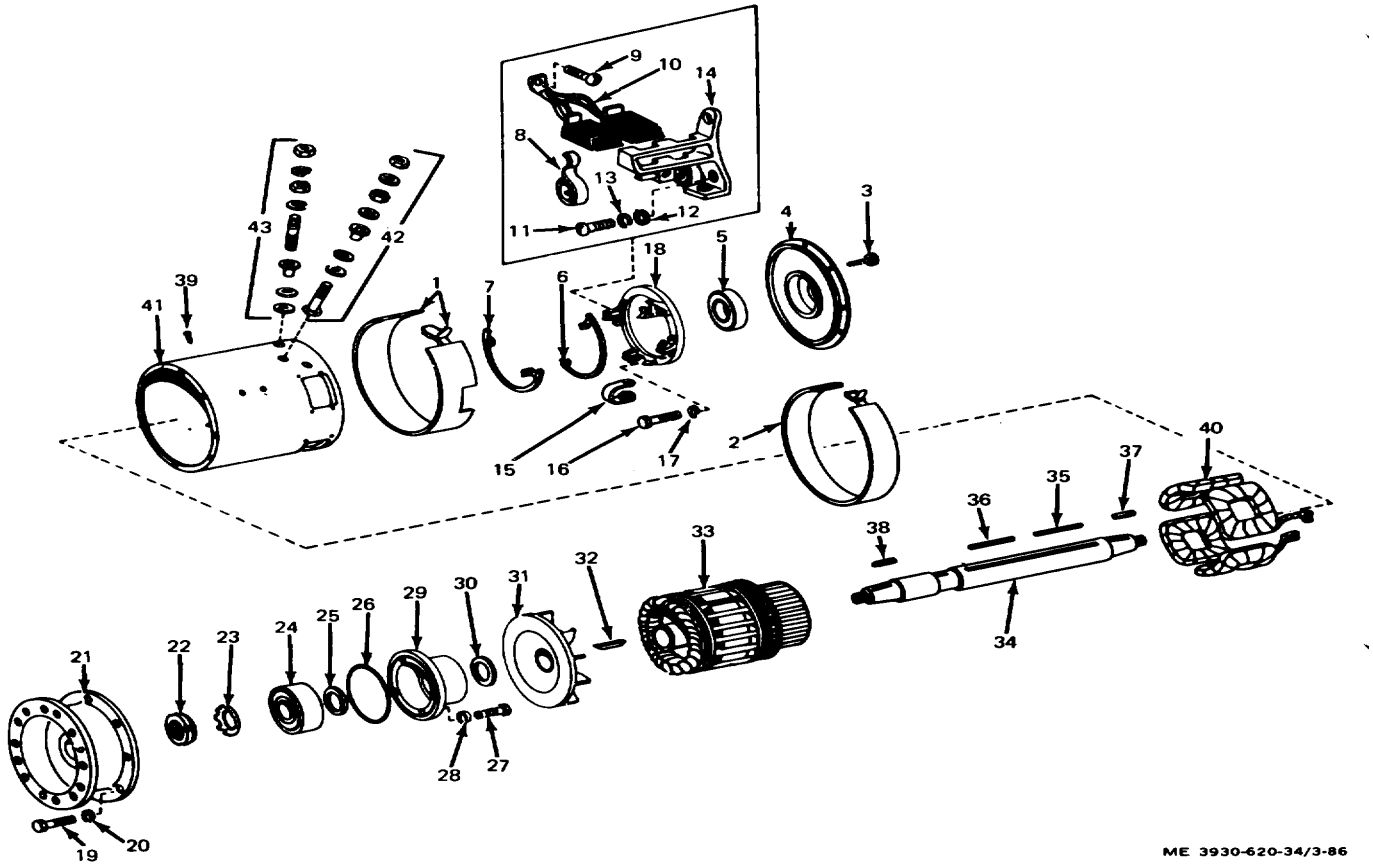

1. Front cover
2. Rear cover
3. Screw (8)
4. Front end plate
5. Front ball bearing
6. Brush connector
7. Brush connector
8. Spring (4)
9. Screw (4)
10. Electrical contact brush (4)
11. Screw (8)
12. Washer (8)
13. lock washer (8)
14. Brush holder (4)
15. Brush holder
16. Screw (4)
17. Lock washer (4)
18. Brush holder plate
19. Screw (8)
20. Lock washer (8)
21. Rear end plate
22. Bearing lock nut
23. Bearing lock washer
24. Rear ball bearing
25 Grease seal
26. Preformed packing
27. Screw
28. Lock washer (4)
29. Bearing retainer
30. Retaining ring
31. Fan
32. Machine key
33. Armature assembly
34. Armature shaft
35. Machine key
36. Machine key
37. Machine key
38. Machine key
39. Screw (8)
40. Field winding
41. Stator
42. Field terminal stud assembly
43. Armature stud assembly

Figure 3-86. Drive motor, exploded view.

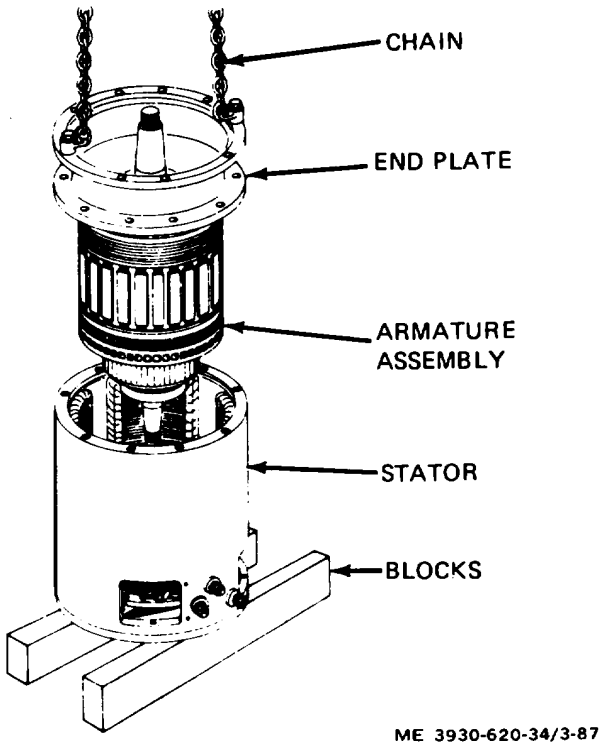

Figure 3-87. Removing armature from stator.

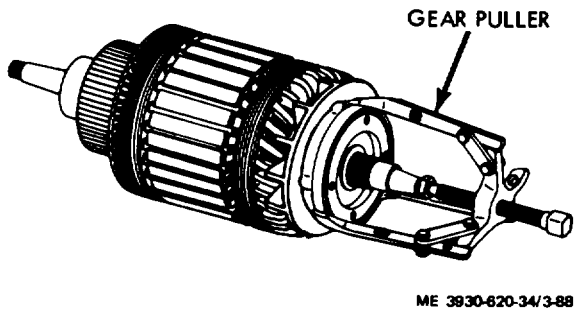

Figure 3-88. Removing bearing retainer.

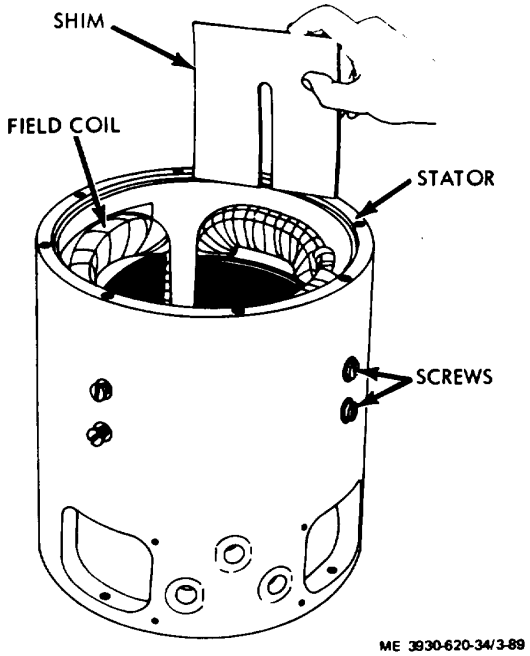

Figure 3-89. Removing shims.

(1) Check armature for shorts by placing it on a "growler" and with a steel strip or a hacksaw blade held on armature core, rotate armature. If blade vibrates, armature is shorted in area of the core below the vibrating blade. Copper or brush dust in slots between commutator bars sometimes cause shorts which can be eliminated by cleaning out slots. Shorts at crossovers of coils at core end can often be eliminated by bending wire slightly and re-insulating exposed bare wire. If short cannot be eliminated, armature must be replaced.

(2) To test armature for grounds, place one probe of test lamp on armature core or shaft and place other probe on each commutator bar in turn.

If lamp lights. armature is grounded and must be replaced.

(3) To test for grounded fields. place one probe, of test lamp on field frame and other probe on field terminal. If lamp lights. field coils are grounded and must be replaced if ground cannot be located and repaired.

h. Undercutting Mica. Carefully inspect the commutator. If burned. rough. or out-of-round, it must be cut down and the mica undercut.

(1) Place armature in a lathe and turn down comnmutator until true. Make certain cut is not made on commutator riser bars as solder will be removed. weakening coil connections at this section. Remain approximately 3/ 16 inch from riser bars cutting.

(2) Undercut mica between bars to a depth not exceeding 0.030 inch. Undercut must be-full width of mica and flat at bottom. (fig. 3-90.) After undercutting. clean out slots to remove any dirt or copper dust.

(3) Sand commutator lightly with No. 00 sandpaper to remote an. burrs left from undercutting.

(4) Check armature on a growler for short circuits. Refer to subparagraph h. step (1).

i. Armature Shaft Removal.

Note. Pressure to remove or install shaft may exceed 20 tons.

(1) Place the drive end of the shaft in a heavy duty pipe approximately 2 1 / 4 inches I.D. and at least 18 inches long. (fig. 3-91.) Caution: Make certain the top end of the pipe makes complete contact with the core from above shaft, but within a radius of the core rivets.

(2) Place a second pipe of 1 1/4 inches I. D., 1 1/2 inches maximum 0. D and about 4 inches long. over commutator end against bearing shoulder on shaft. Apply vertical pressure on pipe (commutator end) and press shaft from armature.

j. Reassembly.

(1) Inspect all parts for signs of unusual wear, broken insulation or loose connections. Replace any damaged or worn parts.

(2) Reassembly of this unit is a reversal of the disassembly procedure. with the following recommendations.

(a) To replace shaft. place a 6 inch, 1 1/2 inch I. D 2 1/4 inch 0. D. pipe against commutator sleeve with assembly vertical. Insert shaft as far as it will go. Using a 1 5 / 8 inch I. D. pipe against bearing shoulder, apply exact vertical pressure until shaft bottoms correctly against core support.

(b) Bearing retainer with seal must be assembled on shaft before installing bearing.

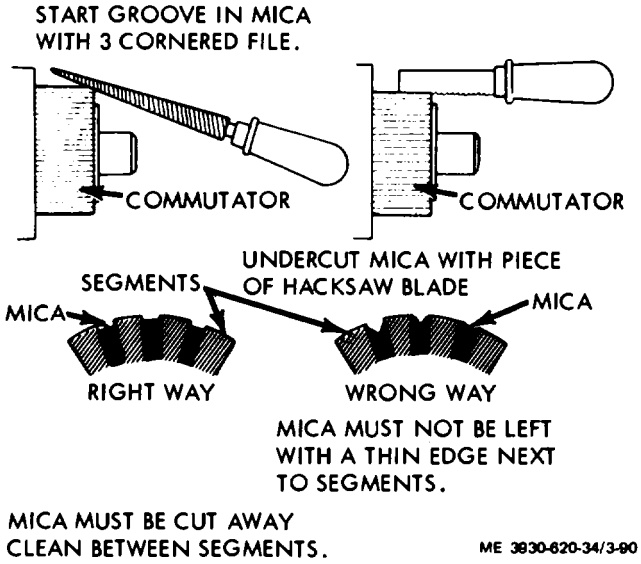

Figure 3-90. Undercutting mica.

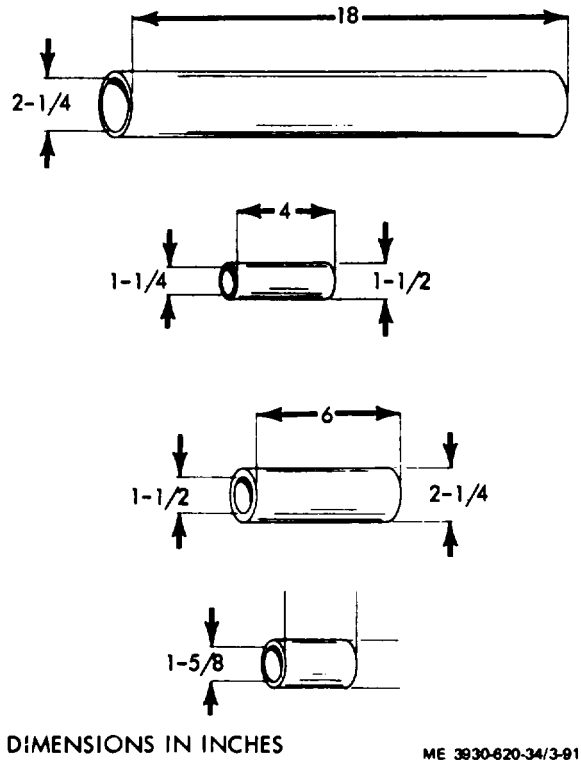

Figure 3-91. Armature shaft pipes.

3-49. General

Refer to TM 10-3930-620-12 for removal and installation of drive or steer wheels and servicing of wheel bearings.

3-50. Cushion Tire Replacement

a. General. The wheels used for cushion tires are machined from castings. Any misalignment of the tire and wheel, while the tire is being pressed onto the wheel, can cause possible damage to the wheel. Because of this, a chamfer has been provided on the outside edge of the wheel and on the end of the inside diameter of the tire's metal insert. The chamfers help center the wheel and tire during the pressing operation and reduce the possibility of misalignment. (fig. 3-92.)

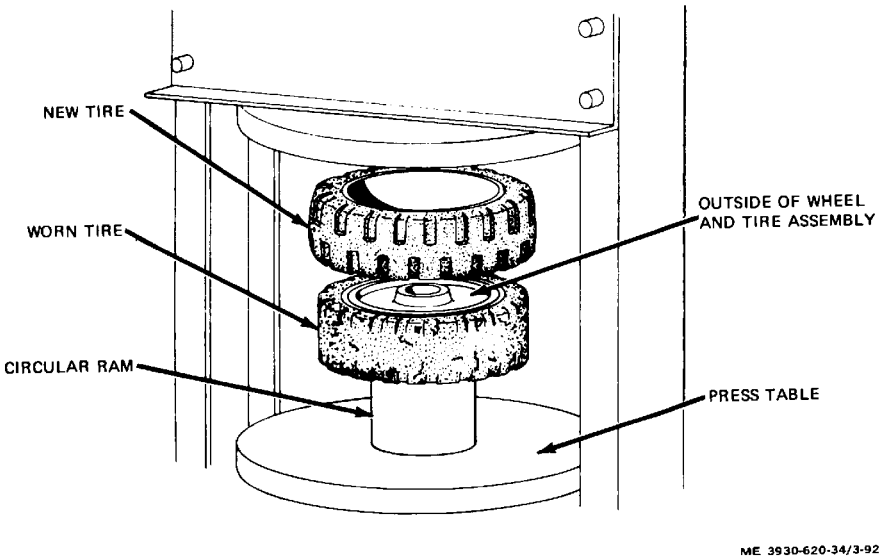

Figure 3-92. Cushion tire replacement.

b. Procedure.

(1) Check inside diameter of metal insert of new tire. Remove any scale or rust with sandpaper. Clean inside of metal insert and lubricate it with bearing grease.

(2) Place a circular ram on the press table. The length of the ram must be longer than the width of the old tire that is to be removed to allow complete removal of old tire. The outside diameter of the ram must be small enough to fit loosely in the insert of the tire, but must be large enough to rest squarely on the bull gear's flat surface (drive wheel or on the flat surface at the outer edge of the wheel (steer wheel).

(3) If the outside edge of the wheel is not flush with the edge of the metal insert in the old tire. measure how far wheel is recessed inside the tire. New tire must be replaced at the same position that the worn tire is installed on the wheel. A spacer, slightly smaller in diameter than the inside diameter of the tire insert and the same thickness as the depth of the recess, can be used to obtain the proper amount of recess.

(4) Position wheel assembly with worn tire on top of circular ram so outside of wheel is positioned upward. The outside edge of the wheel has a chamfer to help guide the new tire onto the wheel. The chamfered edge must always be the leading edge of the wheel whenever a tire is pressed onto a wheel.

(5) Center the wheel assembly on top of the ram and make certain they make-up

(6) Position new tire on top of wheel and tire assembly. Align new tire and wheel so they are concentric with each other.

(7) Start pressing new tire onto wheel and worn tire off the wheel. Run press slowly for the first couple of inches of travel because this is the critical stage of the pressing operation. If tire begins to cock, stop press immediately and realign tire. A sharp jar with a soft headed mallet will usually realign tire on wheel. If wheel is to be recessed in tire, stop press after tire has been started on wheel. Position spacer (mentioned previously) inside 1lhii new tire so it rests squarely on the outer edge of wheel. Continue pressing operation until tire is correctly positioned on the wheel.

(8) Release press and remove from press table. Wipe off grease and inspect wheel and tire assembly.

INDEX

By Order of the Secretary of the Army:

W. C. WESTMORELAND,
General, United States Army,
Chief of Staff.

Official:

VERNE L. BOWERS,
Major General, United States Army,
The Adjutant General.

Distribution:

To be distributed in accordance with DA Form 12-25, Section I (qty rqr block no. 191) Direct and General Support Maintenance requirements for Truck, Fork Lift, Electrical.

* U.S. GOVERNMENT PRINTING OFFICE : 1982 0 - 381-302 (183)

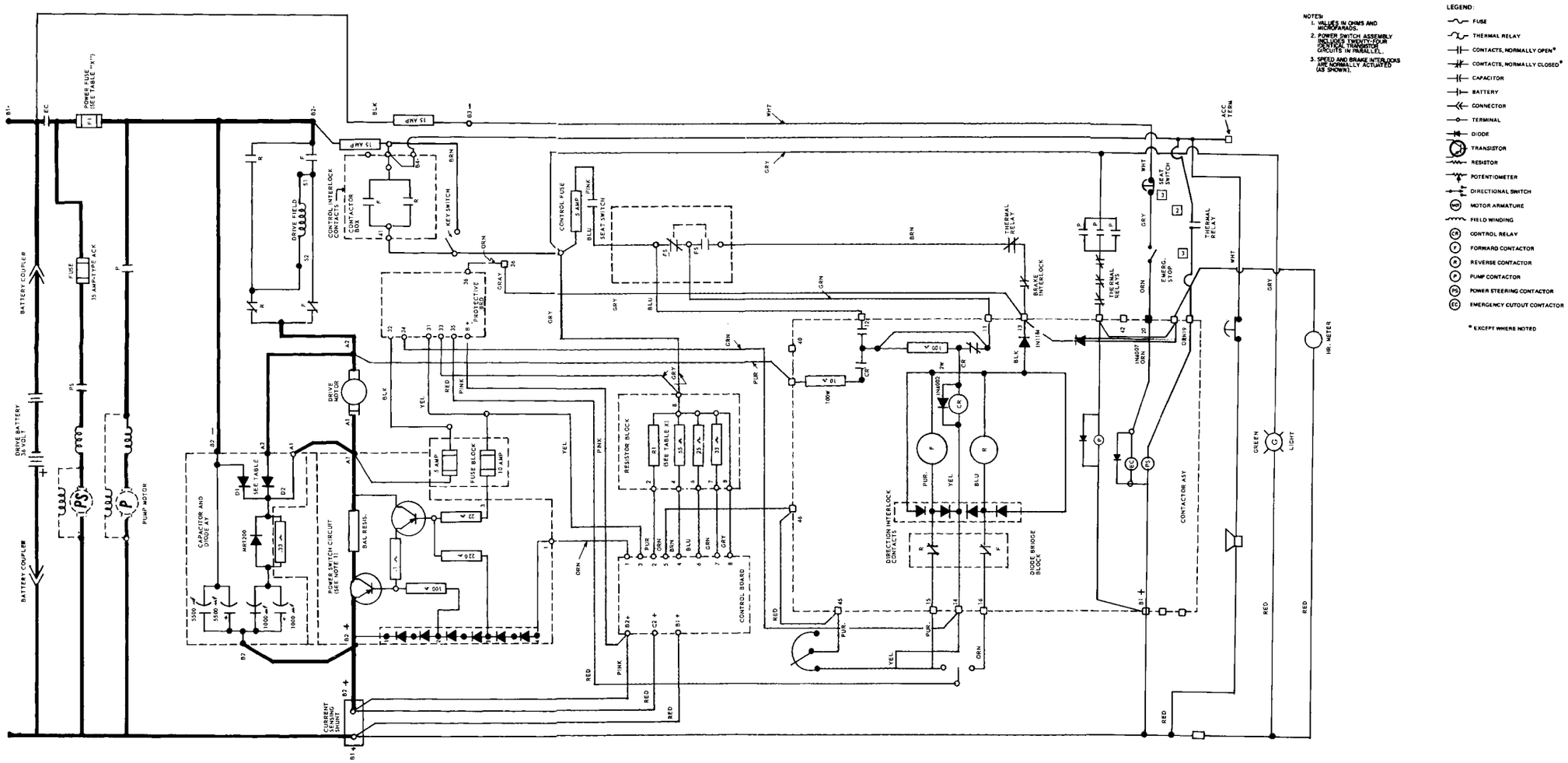

Figure 3-1. Electrical system schematic diagram

Figure 3-1. Electrical System Schematic Diagram

TEAR ALONG PERFORATED LINE

RECOMMENDED CHANGES TO EQUIPMENT TECHNICAL PUBLICATIONS

SOMETHING WRONG WITH THIS PUBLICATION?

FROM: (PRINT YOUR UNIT'S COMPLETE ADDRESS)

DATE SENT

PUBLICATION NUMBER	PUBLICATION DATE	PUBLICATION TITLE

BE EXACT. . .PIN-POINT WHERE IT IS

PAGE NO.	PARA-GRAPH	FIGURE NO.	TABLE NO.

IN THIS SPACE TELL WHAT IS WRONG AND WHAT SHOULD BE DONE ABOUT IT:

PRINTED NAME, GRADE OR TITLE, AND TELEPHONE NUMBER

SIGN HERE:

DA FORM 1 JUL 79 2028-2

PREVIOUS EDITIONS ARE OBSOLETE.

P.S.—IF YOUR OUTFIT WANTS TO KNOW ABOUT YOUR RECOMMENDATION MAKE A CARBON COPY OF THIS AND GIVE IT TO YOUR HEADQUARTERS.

PIN: 018290-002

This fine document...

Was brought to you by me:

Liberated Manuals -- free army and government manuals

Why do I do it? I am tired of sleazy CD-ROM sellers, who take publicly available information, slap “watermarks” and other junk on it, and sell it. Those masters of search engine manipulation make sure that their sites that sell free information, come up first in search engines. They did not create it... They did not even scan it... Why should they get your money? Why are not letting you give those free manuals to your friends?

I am setting this document FREE. This document was made by the US Government and is NOT protected by Copyright. Feel free to share, republish, sell and so on.

I am not asking you for donations, fees or handouts. If you can, please provide a link to liberatedmanuals.com, so that free manuals come up first in search engines:

<A HREF=http://www.liberatedmanuals.com/>Free Military and Government Manuals</A>

- Sincerely
  Igor Chudov
  http://igor.chudov.com/
- Chicago Machinery Movers